TECHNICAL MANUAL

ORGANIZATIONAL MAINTENANCE MANUAL

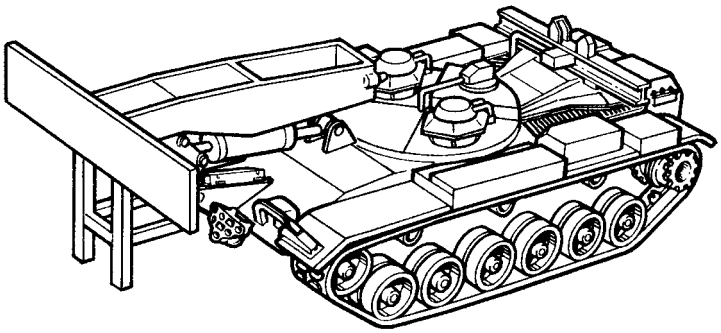

M60A1 TANK CHASSIS, TRANSPORTING: FOR BRIDGE, ARMORED-VEHICLE-LAUNCHED; SCISSORING TYPE, CLASS 60 (5420-00-889-2020)

TABLE OF CONTENTS	ii
POWERPLANT MAINTENANCE	5-1
ENGINE MAINTENANCE	6-1
FUEL SYSTEM MAINTENANCE	7-1
EXHAUST SYSTEM MAINTENANCE	8-1
COOLING SYSTEM MAINTENANCE	9-1

DISTRIBUTION STATEMENT A : Approved for public release; distribution is unlimited.

HEADQUARTERS, DEPARTMENT OF THE ARMY

OCTOBER 1985

WARNING

CARBON MONOXIDE POISONING CAN BE DEADLY

Carbon monoxide is a colorless, odorless, deadly poisonous gas, which when breathed deprives the body of oxygen and causes suffocation. Exposure to air contaminated with carbon monoxide produces symptoms of headache, dizziness, loss of muscular control, apparent drowsiness, and/or coma. Permanent brain damage or death can result from severe exposure. Carbon monoxide occurs in the exhaust fumes of fuel-burning heaters and internal-combustion engines and becomes dangerously concentrated under conditions of inadequate ventilation. The following precautions must be observed to make sure of the safety of personnel whenever the personnel heater, main or auxiliary engine of any vehicle is operated for maintenance purposes or tactical use.

1. DO NOT operate heater or engine of vehicle in an enclosed area unless the area is ADEQUATELY VENTILATED.

2. DO NOT idle engine for long periods without maintaining ADEQUATE VENTILATION in personnel compartments.

3. DO NOT drive any vehicle with inspection plates, cover plates, or engine compartment doors removed unless necessary for maintenance purposes.

4. BE ALERT at all times during vehicle operation for exhaust odors and exposure symptoms. If either are present, IMMEDIATELY VENTILATE personnel compartments. If symptoms persist, remove affected personnel from vehicle and treat as follows: expose to fresh air; keep warm; DO NO PERMIT PHYSICAL EXERCISE.
   For artificial respiration, refer to FM 4-25.11.

THE BEST DEFENSE AGAINST CARBON MONOXIDE POISONING IS ADEQUATE VENTILATION.

WARNING

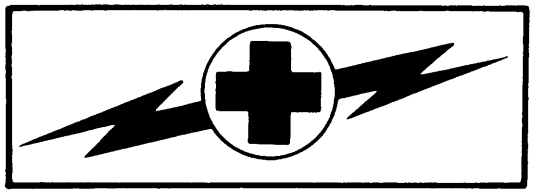

WARNING

HIGH VOLTAGE
Used in the operation of this equipment

DEATH ON CONTACT
May result if personnel fail to observe safety precautions.

Never work on electronic equipment unless there is another person nearby who is familiar with the operation and hazards of the equipment and who is competent in administering first aid. When a technician is aided by operators, he must warn them about dangerous areas.

Whenever possible, the master battery switch and battery ground straps should be either turned off or disconnected before beginning work on the equipment.

Whenever the nature of the operation permits, keep one hand away from the equipmen to reduce the hazard of current flowing through vital organs of the body.

Before you work around tracked vehicles, remove rings, bracelets, and wristwatches. These items may be caught on projections and cause injury or may be shorted across an electrical circuit and cause severe burns and electrical shock.

For artificial respiration, refer to FM 4-25.11.

WARNING

HAZARDOUS NOISE

1. Hearing protection (helmet) required.

2. Double hearing protection (helmet and ear plugs) required on road marches at speeds over 15 mph.

WARNING

The following summary list is adapted from the warnings within this volume. However, all warnings should be observed as noted in the text.

Hold up rear drain valve seat when removing last screw attaching valve seat to hull floor. Valve seat is heavy and can cause injury if it falls.

Hold up front drain valve cage assembly when removing last screw attaching cage to hull. Valve assembly may fall and cause injury if cage is not held up.

Handle charged fire extinguisher cylinders with care. Do not jar or subject cylinders to temperature above 140° F (60° C).

Driver's hatch cover weighs approximately 130 pounds. Do not try to lift it alone.

The unit commander or senior officer in charge of maintenance personnel assigned to remove and dispose of contaminated gas filters must prescribe necessary protective clothing to be worn when replacing gas particulate filters. He must also prescribe necessary safety measures to be performed before new gas filters are installed.

Contaminated gas particulate filters must be handled in accordance with FM 3–5 and must be disposed of by trained personnel.

Compressed air used for cleaning purposes will not exceed 30 psi. Use only with effective chip guarding and personal protective equipment (goggles/shield, gloves, etc).

Dry cleaning solvent P-D-680 is toxic and flammable. To prevent personal injury, wear protective goggles and gloves and use only in a well–ventilated area. Avoid contact with skin, eyes, and clothes and don't breathe vapors. Do not use near open flame or excessive heat. The flash point for Type #1 Dry Cleaning Solvent is 100° F (38° C) and for Type #2 is 138° F (50° C). If you become dizzy while using cleaning solvent, get fresh air immediately and get medical aid. If contact with eyes is made, wash your eyes with water and get medical aid immediately.

To prevent screws from pulling out of box and injuring personnel, a minimum of 200 pounds must be placed atop the door before attempting to remove screws.

Compressed air used for cleaning air filters will not exceed 90 psi. Use only with effective chip guarding and personal protective equipment (goggles/shield, gloves, etc).

WARNING

If NBC exposure is suspected, all air filter media should be handled by personnel wearing protective equipment. Consult your unit NBC Officer or NBC NCO for appropriate handling or disposal instructions.

WARNING

Failure to correctly connect brake quick disconnect will result in brake failure and could cause serious injury or death.

CHANGE

NO. 5

HEADQUARTERS
DEPARTMENT OF THE ARMY
Washington, D.C., 22 January 2007

ORGANIZATIONAL MAINTENANCE

M60A1 TANK CHASSIS, TRANSPORTING: FOR BRIDGE, ARMORED-VEHICLE-LAUNCHED; SCISSORING TYPE, CLASS 60 (5420-00-889-2020)

TM 5-5420-202-20-2, dated 28 October 1985, is changed as follows:

1. Remove old pages and insert new pages as indicated below.
2. New or changed material is indicated by a vertical bar in the margin of the page.

Remove Pages	Insert Pages
None	A thru E/(F BLANK)
i thru v/(vi blank)	i thru v/(vi blank)
7-3 and 7-4	7-3 and 7-4
None	7-4.1/(7-4.2 blank)
None	7-333 thru 7-398
2028 Sample and 2028 (Sample Back)	None
2028 Front and 2028 Back	2028 Front and 2028 Back
2028 Front and 2028 Back	2028 Front and 2028 Back
Front Cover (Inside Blank)	Front Cover and PIN

.

DISTRIBUTION STATEMENT A: Approved for public release; distribution is unlimited.

File this change sheet in front of the publication for reference purposes.

By Order of the Secretary of the Army:

Official:

JOYCE E. MORROW
Administrative Assistant to the
Secretary of the Army
0634909

PETER J. SCHOOMAKER
General, United States Army
Chief of Staff

DISTRIBUTION: To be distributed in accordance with the initial distribution number (IDN) 371049 requirements for TM 5-5420-202-20-2

CHANGE NO. 4

HEADQUARTERS
DEPARTMENT OF THE ARMY
Washington, D.C., 14 October 2005

ORGANIZATIONAL MAINTENANCE

M60A1 TANK CHASSIS, TRANPORTING: FOR BRIDGE, ARMORED-VEHICLE-LAUNCHED; SCISSORING TYPE, CLASS 60 (5420-00-889-2020)

TM 5-5420-202-20-2, dated 28 October 1985, is changed as follows:

1. Remove old pages and insert new pages as indicated below.

2. New or changed material is indicated by a vertical bar in the margin of the page.

Remove Page	Insert Pages
a through c/d (blank)	a through d
5-17 and 5-18	5-17 and 5-18
None	5-18.1/5-18.2 (blank)
Sample DA Forms 2028-2	Sample DA Forms 2028
DA Forms 2028-2	DA Forms 2028

DISTRIBUTION STATEMENT A: Approved for public release; distribution is unlimited.

By Order of the Secretary of the Army:

PETER J. SCHOOMAKER
General, United States Army
Chief of Staff

Official:

SANDRA R. RILEY
Administrative Assistant to the
Secretary of the Army
0521303

DISTRIBUTION: To be distributed in accordance with the initial distribution requirements for IDN: 371049, requirements for TM 5-5420-202-20-2.

CHANGE

NO. 3

HEADQUARTERS
DEPARTMENT OF THE ARMY
Washington D. C., *13 February 1992*

TECHNICAL MANUAL

ORGANIZATIONAL MAINTENANCE

M60A1 TANK CHASSIS,
TRANSPORTING:
FOR BRIDGE,
ARMORED-VEHICLE-LAUNCHED;
SCISSORING TYPE, CLASS 60
(5420-00-889-2020)

TM 5-5420-202-20-2, 28 October 1985, is changed as follows:

1. Remove old pages and insert new pages as indicated below.

2. New or changed material is indicated by a vertical bar in the margin of the page.

Remove Pages	Insert Pages
5-1 and 5-2	5-1 and 5-2
5-13 thru 5-16	5-13 thru 5-16
None	5-16.1/(5-16.2 blank)
5-25 thru 5-30	5-25 thru 5-30
5-39 and 5-40	5-39 and 5-40
6-3 and 6-4	6-3 and 6-4
6-63 thru 6-66	6-63 thru 6-66
7-73 thru 7-76	7-73 thru 7-76

File this change sheet in front of the publication for reference purposes.

Approved for public release; distribution is unlimited.

By Order of the Secretary of the Army:

GORDON R. SULLIVAN
General, United States Army
Chief of Staff

Official:

MILTON H. HAMILTON
Administrative Assistant to the
Secretary of the Army
00605

Distribution:

To be distributed in accordance with DA Form 12-37-E, Block 1049, Unit maintenance requirements for TM 5-5420–202–20–2.

Change
No. 2

HEADQUARTERS
DEPARTMENT OF THE ARMY
Washington *D.C., 7 March 1991*

ORGANIZATIONAL MAINTENANCE
M60A1 TANK CHASSIS
TRANSPORTING: FOR BRIDGE,
ARMORED–VEHICLE–LAUNCHED;
SCISSORING TYPE, CLASS 60
(NSN 5420-00-889-2020)

TM 5–5420–202–20–2, 28 October 1985, is changed as follows:

1. Remove old pages and insert new pages as indicated below.

2. New or changed material is indicated by a vertical bar in the margin of the page.

Remove Pages	Insert Pages
c/(d blank)	c/(d blank)
7–97 and 7–98	7–97 and 7–98

3. File this change in front of the publication for reference purposes.

By Order of the Secretary of the Army:

CARL E. VUONO
General, United States Army
Chief of Staff

Official:

PATRICIA P. HICKERSON
Colonel, United States Army
The Adjutant General

Distribution:
To be distributed in accordance with DA Form 12-37-E, Block 1049, Unit maintenance requirements for TM 5-5420-202-20-2.

CHANGE

NO. 1

HEADQUARTERS
DEPARTMENT OF THE ARMY
Washington, D. C., 5 *May 1986*

TECHNICAL MANUAL
ORGANIZATIONAL MAINTENANCE

M60A1 TANK CHASSIS, TRANSPORTING FOR BRIDGE, ARMORED-VEHICLE-LAUNCHED; SCISSORING TYPE, CLASS 60

(5420-00-889-2020)

TM 5-5420-202-20-2, 28 October 1985, is changed as follows:

1. Remove old pages and insert new pages as indicated below.
2. New or changed material is indicated by a vertical bar in the margin of the page.

Remove Pages	Insert Pages
c/(d blank)	c/(d blank)
5-3 thru 5-6	5-3 thru 5-6
5-19 and 5-20	5-19 and 5-20
None	5-20.1/(5-20.2 blank)
5-33 and 5-34	5-33 and 5-34
6-53 and 6-54	6-53 and 6-54
6-97 thru 6-100	6-97 thru 6-100
None	6-100.1 and 6-100.2
7-1 and 7-2	7-1 and 7-2
None	7-2.1/(7-2.2 blank)
7-83 thru 7-86	7-83 thru 7-86
7-95 thru 7-102	7-95 thru 7-102
7-127 thru 7-130	7-127 thru 7-130
None	7-130.1 thru 7-130.17/(7-130.18 blank)
7-131 and 7-132	7-131 and 7-132
8-1 and 8-2	8-1 and 8-2
8-13 thru 8-28	8-13 thru 8-28

File this change sheet in front of the publication for reference purposes.

By Order of the Secretary of the Army:

JOHN A. WICKHAM, JR.
General, United States Army
Chief of Staff

Official:

R.L. DILWORTH
Brigadier General, United States Army
The Adjutant General

Distribution:

To be distributed in accordance with DA Form 12-37, Organizational Maintenance requirements for Tank Bridge Launcher, M60A1 (AVLB).

☆ U.S. GOVERNMENT PRINTING OFFICE: 1986-643-170/754

LIST OF EFFECTIVE PAGES

INSERT LATEST CHANGED PAGES. DESTROY SUPERSEDED PAGES.
Note: The portion of the text affected by the changes is indicated by a Vertical line or an asterisk.

Dates of issue for original and changed pages are:
Original 0 . . . . . 28 October 1985
Change 1 . . . . . 05 May 1986
Change 2 . . . . . 07 March 1991
Change 3 . . . . . 13 February 1992
Change 4 . . . . . 14 October 2005
Change 5 . . . . . 22 January 2007

TOTAL NUMBER OF PAGES IN THIS PUBLICATION IS 740, CONSISTING OF THE FOLLOWING:

Page No.	*Change No.	Page No.	*Change No.	Page No.	*Change No.
Front Cover	0	5-19	0	6-17	0
PIN	5	5-20	1	6-18	0
a	0	5-20.1 ADDED	1	6-19	0
b	0	5-20.2 BLANK	1	6-20	0
c	4	5-21	0	0-21	0
d	4	5-22	0	6-22	0
A	5	5-23	0	6-23	0
B	5	5-24	0	6-24	0
C	5	5-25	0	6-25	0
D	5	5-26	3	6-26	0
E/(F BLANK)	5	5-27	3	6-27	0
BLANK	5	5-28	3	6-28	0
i	5	5-29	3	6-29	0
ii	5	5-30	0	6-30	0
iii	5	5-31	0	6-31	0
iv	5	5-32	0	6-32	0
v	5	5-33	1	6-33	0
vi BLANK	5	5-34	0	6-34	0
5-1	0	5-35	0	6-35	0
5-2	3	5-36	0	6-36	0
5-3	1	5-37	0	6-37	0
5-4	0	5-38	0	6-38	0
5-5	1	5-39	0	6-39	0
5-6	0	5-40	3	6-40	0
5-7	0	6-1	0	6-41	0
5-8	0	6-2	0	6-42	0
5-9	0	6-3	0	6-43	0
5-10	0	6-4	3	6-44	0
5-11	0	6-5	0	6-45	0
5-12	0	6-6	0	6-46	0
5-13	0	6-7	0	6-47	0
5-14	3	6-8	0	6-48	0
5-15	3	6-9	0	6-49	0
5-16	3	6-10	0	6-50	0
5-16.1 ADDED	3	6-11	0	6-51	0
5-16.2 BLANK	3	6-12	0	6-52	0
5-17	0	6-13	0	6-53	1
5-18	4	6-14	0	6-54	1
5-18.1/(5-18.2 BLANK)	4	6-15	0	6-55	0
BLANK	4	6-16	0	6-55	0

*Zero in this column indicates an original page.

Page No.	*Change No.
6-56	0
6-57	0
6-58	0
6-59	0
6-60	0
6-61	0
6-62	0
6-63	0
6-64	3
6-65	0
6-66	3
6-67	0
6-68	0
6-69	0
6-70	0
6-71	0
6-72	0
6-73	0
6-74	0
6-75	0
6-76	0
6-77	0
6-78	0
6-79	0
6-80	0
6-81	0
6-82	0
6-83	0
6-84	0
6-85	0
6-86	0
6-87	0
6-88	0
6-89	0
6-90	0
6-91	0
6-92	0
6-93	0
6-94	0
6-95	0
6-96	0
6-97	1
6-98	1
6-99	1
6-100	1
6-100.1 ADDED	1
6-100.2 ADDED	1
6-101	0
6-102	0
6-103	0
6-104	0
6-105	0
6-106	0
6-107	0
6-108	0
6-109	0
6-110	0
6-111	0
6-112	0
6-113	0
6-114	0
6-115	0
6-116	0
6-117	0
6-118	0
6-119	0
6-120	0
6-121	0
6-122	0
6-123	0
6-124	0
6-125	0
6-126	0
6-127	0
6-128	0
6-129	0
6-130	0
6-131	0
6-132	0
6-133	0
6-134	0
6-135	0
6-136	0
6-137	0
6-138	0
7-1	0
7-2	1
7-2.1 ADDED	1
7-2.2 BLANK	1
7-3	0
7-4	5
7-4.1 ADDED	5
7-4.2 BLANK	5
7-5	0
7-6	0
7-7	0
7-8	0
7-9	0
7-10	0
7-11	0
7-12	0
7-13	0
7-14	0
7-15	0
7-16	0
7-17	0
7-18	0
7-19	0
7-20	0
7-21	0
7-22	0
7-23	0
7-24	0
7-25	0
7-26	0
7-27	0
7-28	0
7-29	0
7-30	0
7-31	0
7-32	0
7-33	0
7-34	0
7-35	0
7-36	0
7-37	0
7-38	0
7-39	0
7-40	0
7-41	0
7-42	0
7-43	0
7-44	0
7-45	0
7-46	0
7-47	0
7-48	0
7-49	0
7-50	0
7-51	0
7-52	0
7-53	0
7-54	0
7-55	0
7-56	0
7-57	0
7-58	0
7-59	0
7-60	0
7-61	0
7-62	0
7-63	0
7-64	0
7-65	0
7-66	0
7-67	0
7-68	0
7-69	0
7-70	0
7-71	0
7-72	0
7-73	0
7-74	3
7-75	3

*Zero in this column indicates an original page.

Page No.	*Change No.
7-76	3
7-77	0
7-78	0
7-79	0
7-80	0
7-81	0
7-82	0
7-83	0
7-84	1
7-85	1
7-86	1
7-87	0
7-88	0
7-89	0
7-90	0
7-91	0
7-92	0
7-93	0
7-94	0
7-95	0
7-96	1
7-97	2
7-98	1
7-99	1
7-100	1
7-101	1
7-102	1
7-103	0
7-104	0
7-105	0
7-106	0
7-107	0
7-108	0
7-109	0
7-110	0
7-111	0
7-112	0
7-113	0
7-114	0
7-115	0
7-116	0
7-117	0
7-118	0
7-119	0
7-120	0
7-121	0
7-122	0
7-123	0
7-124	0
7-125	0
7-126	0
7-127	0
7-128	1
7-129	1
7-130	1
7-130.1 ADDED	1
7-130.2 ADDED	1
7-130.3 ADDED	1
7-130.4 ADDED	1
7-130.5 ADDED	1
7-130.6 ADDED	1
7-130.7 ADDED	1
7-130.8 ADDED	1
7-130.9 ADDED	1
7-130.10 ADDED	1
7-130.11 ADDED	1
7-130.12 ADDED	1
7-130.13 ADDED	1
7.130.14 ADDED	1
7-130.15 ADDED	1
7-130.16 ADDED	1
7-130.17 ADDED	1
7-130.18 BLANK	1
7-131	1
7-132	1
7-133	0
7-134	0
7-135	0
7-136	0
7-137	0
7-138	0
7-139	0
7-140	0
7-141	0
7-142	0
7-143	0
7-144	0
7-145	0
7-146	0
7-147	0
7-148	0
7-149	0
7-150	0
7-151	0
7-152	0
7-153	0
7-154	0
7-155	0
7-156	0
7-157	0
7-158	0
7-159	0
7-160	0
7-161	0
7-162	0
7-163	0
7-164	0
7-165	0
7-166	0
7-167	0
7-168	0
7-169	0
7-170	0
7-171	0
7-172	0
7-173	0
7-174	0
7-175	0
7-176	0
7-177	0
7-178	0
7-179	0
7-180	0
7-181	0
7-182	0
7-183	0
7-184	0
7-185	0
7-186	0
7-187	0
7-188	0
7-189	0
7-190	0
7-191	0
7-192	0
7-193	0
7-194	0
7-195	0
7-196	0
7-197	0
7-198	0
7-199	0
7-200	0
7-201	0
7-202	0
7-203	0
7-204	0
7-205	0
7-206	0
7-207	0
7-208	0
7-209	0
7-210	0
7-211	0
7-212	0
7-213	0
7-214	0
7-215	0
7-216	0

*Zero in this column indicates an original page.

Page No.	*Change No.
7-217	0
7-218	0
7-219	0
7-220	0
7-221	0
7-222	0
7-223	0
7-224	0
7-225	0
7-226	0
7-227	0
7-228	0
7-229	0
7-230	0
7-231	0
7-232	0
7-233	0
7-234	0
7-235	0
7-236	0
7-237	0
7-238	0
7-239	0
7-240	0
7-241	0
7-242	0
7-243	0
7-244	0
7-245	0
7-246	0
7-247	0
7-248	0
7-249	0
7-250	0
7-251	0
7-252	0
7-253	0
7-254	0
7-255	0
7-256	0
7-257	0
7-258	0
7-259	0
7-260	0
7-261	0
7-262	0
7-263	0
7-264	0
7-265	0
7-266	0
7-267	0
7-268	0
7-269	0
7-270	0

Page No.	*Change No.
7-271	0
7-272	0
7-273	0
7-274	0
7-275	0
7-276	0
7-277	0
7-278	0
7-279	0
7-280	0
7-281	0
7-282	0
7-283	0
7-284	0
7-285	0
7-286	0
7-287	0
7-288	0
7-289	0
7-290	0
7-291	0
7-292	0
7-293	0
7-294	0
7-295	0
7-296	0
7-297	0
7-298	0
7-299	0
7-300	0
7-301	0
7-302	0
7-303	0
7-304	0
7-305	0
7-306	0
7-307	0
7-308	0
7-309	0
7-310	0
7-311	0
7-312	0
7-313	0
7-314	0
7-315	0
7-316	0
7-317	0
7-318	0
7-319	0
7-320	0
7-321	0
7-322	0
7-323	0
7-324	0

Page No.	*Change No.
7-325	0
7-326	0
7-327	0
7-328	0
7-329	0
7-330	0
7-331	0
7-332	0
7-333 ADDED	5
7-334 ADDED	5
7-335 ADDED	5
7-336 ADDED	5
7-337 ADDED	5
7-338 ADDED	5
7-339 ADDED	5
7-340 ADDED	5
7-341 ADDED	5
7-342 ADDED	5
7-343 ADDED	5
7-344 ADDED	5
7-345 ADDED	5
7-346 ADDED	5
7-347 ADDED	5
7-348 ADDED	5
7-349 ADDED	5
7-350 ADDED	5
7-351 ADDED	5
7-352 ADDED	5
7-353 ADDED	5
7-354 ADDED	5
7-355 ADDED	5
7-356 ADDED	5
7-357 ADDED	5
7-358 ADDED	5
7-359 ADDED	5
7-360 ADDED	5
7-361 ADDED	5
7-362 ADDED	5
7-363 ADDED	5
7-364 ADDED	5
7-365 ADDED	5
7-366 ADDED	5
7-367 ADDED	5
7-368 ADDED	5
7-369 ADDED	5
7-370 ADDED	5
7-371 ADDED	5
7-372 ADDED	5
7-373 ADDED	5
7-374 ADDED	5
7-375 ADDED	5
7-376 ADDED	5
7-377 ADDED	5
7-378 ADDED	5

*Zero in this column indicates an original page.

Page No.	*Change No.
7-379 ADDED	5
7-380 ADDED	5
7-381 ADDED	5
7-382 ADDED	5
7-383 ADDED	5
7-384 ADDED	5
7-385 ADDED	5
7-386 ADDED	5
7-387 ADDED	5
7-388 ADDED	5
7-389 ADDED	5
7-390 ADDED	5
7-391 ADDED	5
7-392 ADDED	5
7-393 ADDED	5
7-394 ADDED	5
7-395 ADDED	5
7-396 ADDED	5
7-397 ADDED	5
7-398 ADDED	5
8-1	1
8-2	0
8-3	0
8-4	0
8-5	0
8-6	0
8-7	0
8-8	0
8-9	0
8-10	0
8-11	0
8-12	0
8-13	1
8-14	1
8-15	1
8-16	1
8-17	1
8-18	1
8-19	1
8-20	1
8-21	1
8-22	1
8-23	1
8-24	1
8-25	1
8-26	1
8-27	1
8-28	1
9-1	0
9-2	0
9-3	0
9-4	0
9-5	0
9-6	0
9-7	0
9-8	0
9-9	0
9-10	0
9-11	0
9-12	0
9-13	0
9-14	0
9-15	0
9-16	0
9-17	0
9-18	0
9-19	0
9-20	0
9-21	0
9-22	0
9-23	0
9-24	0
9-25	0
9-26	0
9-27	0
9-28	0
9-29	0
9-30	0
9-31	0
9-32	0
9-33	0
9-34	0
9-35	0
9-36	0
9-37	0
9-38	0
9-39	0
9-40	0
9-41	0
9-42	0
9-43	0
9-44	0
9-45	0
9-46	0
9-47	0
9-48	0
9-49	0
9-50	0
9-51	0
9-52	0
9-53	0
9-54	0
9-55	0
9-56	0
9-57	0
9-58	0
9-59	0
9-60	0
9-61	0
9-62	0
9-63	0
9-64	0
9-65	0
9-66	0
Authentication Front	0
Auth Back BLANK	0
2028 Front	5
2028 Back	5
2028 Front	5
2028 Back	5
2028 Front	5
2028 Back	5
Inside Back Cover	0
Back Cover PIN	0

*Zero in this column indicates an original page.

TECHNICAL MANUAL

HEADQUARTERS
DEPARTMENT OF THE ARMY
Washington, D.C., *28 October 1985*

ORGANIZATIONAL MAINTENANCE MANUAL

M60A1 TANK CHASSIS, TRANSPORTING: FOR BRIDGE, ARMORED-VEHICLE-LAUNCHED; SCISSORING TYPE, CLASS 60 (5420-00-889-2020)

REPORTING ERRORS AND RECOMMENDING IMPROVEMENTS

You can help improve this publication. If you find any mistakes or if you know of a way to improve the procedures, please let us know. Submit your DA Form 2028 (Recommended Changes to Publications and Blank Forms), through the Internet, on the Army Electronic Product Support (A E P S) website. The Internet address is https://aeps.ria.army.mil. The DA Form 2028 is located under the Public Applications section in the AEPS Public Home Page. Fill out the form and click on SUBMIT. Using this form on the AEPS will enable us to respond quicker to your comments and better manage the DA Form 2028 program. You may also mail, fax or e-mail your letter or DA Form 2028 direct to: AMSTA-LC-LPIT/TECH PUBS, TACOM-RI, 1 Rock Island Arsenal, Rock Island, IL 61299-7630. The e-mail address is ROCK-TACOM-TECH-PUBS@conus.army.mil. The fax number is DSN 793-0726 or Commercial (309) 782-0726.

DISTRIBUTION STATEMENT A. Approved for public release; distribution is unlimited.

TABLE OF CONTENTS

		Page
	VOLUME 1	
	HOW TO USE THIS MANUAL	iv
CHAPTER 1	INTRODUCTION	1-1
Section I	General Information	1-1
Section II	Equipment Description And Data	1-2

***This manual together with TM 5-5420-202-20-1, TM 5-5420-202-20-3, TM 5-5420-202-20-4 supersedes TM 5-5420-202-20, 14 January 1976.**

TABLE OF CONTENTS - Continued

		Page
CHAPTER 2	PRINCIPLES OF OPERATION	2-1
Section I	Functional Description	2-1
Section II	Systems Operations	2-2
CHAPTER 3	HULL MAINTENANCE	3-1
Section I	Repair Parts, Special Tools, TMDE, And Support Equipment	3-1
Section II	Service Upon Receipt	3-6
Section III	Preventive Maintenance Checks And Services (PMCS)	3-7
CHAPTER 4	HULL TROUBLESHOOTING	4-1
	VOLUME 2	
CHAPTER 5	POWERPLANT MAINTENANCE	5-1
CHAPTER 6	ENGINE MAINTENANCE	6-1
CHAPTER 7	FUEL SYSTEM MAINTENANCE	7-1
CHAPTER 8	EXHAUST SYSTEM MAINTENANCE	8-1
CHAPTER 9	COOLING SYSTEM MAINTENANCE	9-1
	VOLUME 3	
CHAPTER 10	ELECTRICAL SYSTEM MAINTENANCE	10-1
CHAPTER 11	TRANSMISSION AND SHIFTING MAINTENANCE	11-1
CHAPTER 12	FINAL DRIVE AND UNIVERSAL JOINTS MAINTENANCE	12-1
CHAPTER 13	BRAKE SYSTEM MAINTENANCE	13-1
CHAPTER 14	TRACKS AND SUSPENSION SYSTEM MAINTENANCE	14-1
CHAPTER 15	STEERING SYSTEM MAINTENANCE	15-1
CHAPTER 16	HULL-EXTERIOR MAINTENANCE	16-1

TABLE OF CONTENTS - Continued

VOLUME 4

		Page
CHAPTER 17	HULL-INTERIOR MAINTENANCE	17-1
CHAPTER 18	PERSONNEL HEATER MAINTENANCE	18-1
CHAPTER 19	SPEEDOMETER AND TACHOMETER MAINTENANCE	19-1
CHAPTER 20	FIRE EXTINGUISHER MAINTENANCE	20-1
CHAPTER 21	ENGINE SMOKE GENERATOR SYSTEM MAINTENANCE	21-1
CHAPTER 22	SMOKE GRENADE LAUNCHER MAINTENANCE	22-1
APPENDIX A	REFERENCES	A-1
APPENDIX B	MAINTENANCE ALLOCATION CHART (MAC)	B-1
APPENDIX C	GENERAL MAINTENANCE	C-1
APPENDIX D	EXPENDABLE SUPPLIES AND MATERIALS	D-1
APPENDIX E	SCHEMATIC DIAGRAMS	E-1
APPENDIX F	ILLUSTRATED LIST OF MANUFACTURED ITEMS	F-1
	ALPHABETICAL INDEX	I-1
	MAINTENANCE INFORMATION INDEX	MI-1

HOW TO USE THIS MANUAL:

- Manual is divided into chapters.
- Chapters are by functional group code and are presented in same order as the RPSTL (Repair Parts and Special Tools List).
- Procedure indexes are on procedures that are four pages or more, and indicate how the procedure is set up, i.e., disassembly, removal, cleaning, inspection, etc.
- All references within this technical manual refer to page numbers.
- Steps are numbered and are to be performed in that order.
- Be sure to read all NOTES, WARNINGS, and CAUTIONS.
- Locator views are included wherever necessary. These will help you locate the item which the procedure is referencing.
- Jagged circle (✱) on locator (A) indicates a cutout and means the item is inside the vehicle.
- A (~) symbol represents the outside surface (B) of a piece of equipment that cannot be shown in its entirety.
- Callouts are shown by a circle with a letter inside.
- Locator arrows (C) are black, and mechanical motion arrows (D) are white.
- Broken leader arrow (- - ►) indicates the item is either inside or under the vehicle and cannot be seen.

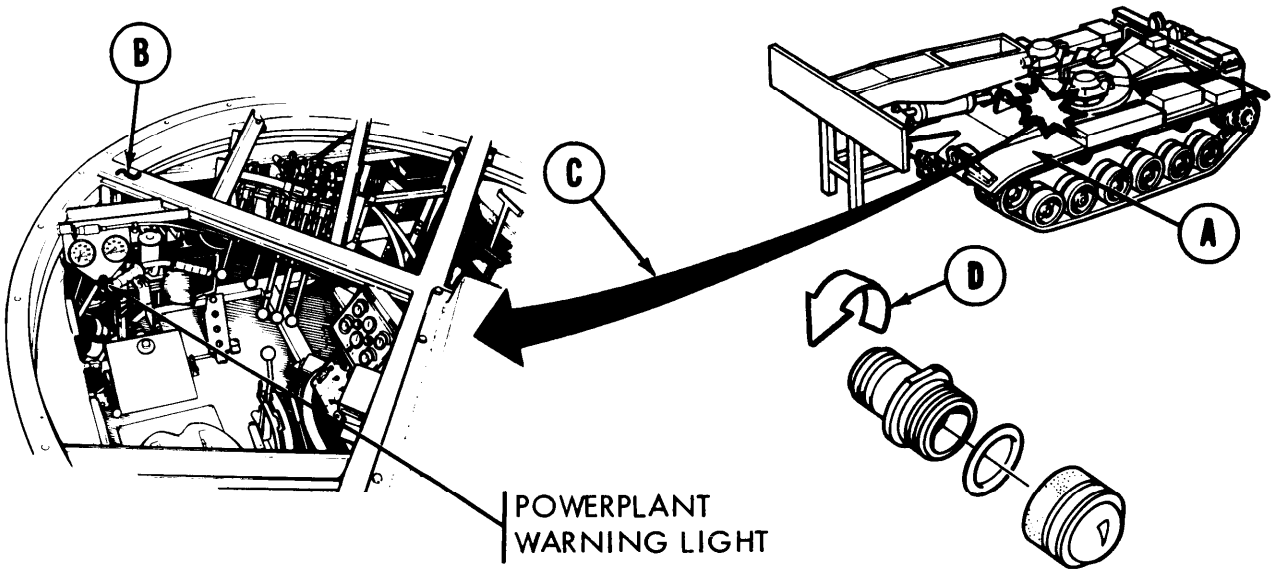

TA247960

HOW TO USE THIS MANUAL - Continued

- An illustrated list of manufactured items includes complete instructions for making items authorized to be manufactured or fabricated and used at organizational maintenance.

- A maintenance information index lists all parts subject to maintenance tasks. It provides the location of all maintenance tasks related to a component in this manual.

- Certain sections of the manual have detailed “how to use” instructions at the beginning of the section - for example troubleshooting.

- As a general maintenance practice, throw away all removed lockwashers, locknuts, o-rings, preformed packings, and cotter pins, and replace with new lockwashers, locknuts, o-rings, preformed packings, and cotter pins at installation.

CHAPTER 5

POWERPLANT MAINTENANCE INDEX

PROCEDURE	PAGE
Powerplant Replacement	5-2
Power Take-off Disconnect	5-23
Powerplant Tests (Ground Hop)	5-25

POWERPLANT REPLACEMENT (Sheet 1 of 21)

PROCEDURE INDEX

PROCEDURE	PAGE
Removal	5-2
Installation	5-14

TOOLS: 9/16 in. socket with 1/2 in. drive
7/16 in. socket with 1/2 in. drive
Ratchet with 1/2 in. drive
Flat-tip screwdriver
Long round nose pliers
7/16 in. combination box and open end wrench
11/16 in. combination box and open end wrench
7/8 in. combination box and open end wrench
7/8 in. crowfoot with 3/8 in drive
Diagonal cutting pliers
3/4 in. socket with 1/2 in. drive
Spanner wrench
Pinch bar
5 in. extension with 1/2 in. drive
1-1/2 in. socket with 3/4 in. drive
Ratchet with 3/4 in. drive
Universal joint with 1/2 in. drive
Hammer
Torque wrench with 3/8 in. drive (0-600 lb-in) (0-68 NŽm)
Torque wrench with 1/2 in. drive (0-175 lb-ft) (0-237 NŽm)
Torque wrench with 3/4 in. drive (0-600 lb-ft) (0-813 N m)
Adjustable wrench
5 ton hoist capable of lifting powerplant 12 ft. high

SPECIAL TOOLS Final drive guide shields (Fig. F-1, Appendix F) (2 required)
Final drive adapter hook-up tool (Fig. F-4, Appendix F)
Engine and transmission sling (Item 32, Chapter 3, Section I)

SUPPLIES: Covers for fire extinguisher flexible tubing
Covers for hydraulic brake line openings
Covers for fuel lines openings
Covers for air cleaner hoses and outlets
Grease (Item 37, Appendix D)
Lockwire (Item 61, Appendix D)
Light rope (or heavy masking tape)
Cotter pins
Wooden blocks 12 in. x 12 in.
Lockwashers

PERSONNEL: Three

REFERENCE: TM 5-5420-202-10

NOTE

Use suitable container to catch fuel whenever any fuel line or connection is loosened or disconnected. Use cloth to wipe any spillage. Discard cloth and drained fuel in accordance with local procedures.

Go on to Sheet 2

POWERPLANT REPLACEMENT (Sheet 2 of 21)

PRELIMINARY PROCEDURES:

Park vehicle on level ground, block both tracks at front and rear (TM 5-5420-202-10)
Release parking brake (TM 5-5420-202-10
Place shifting lever in P (park) (TM 5-5420-202-10)
Place MASTER BATTERY switch OFF (TM 5-5420-202-10)
Disconnect battery ground straps (page 10-268)
Remove top deck (page 16-21)
Remove transmission shroud (page 9-2)
Remove engine upper access cover (page 17-11)
Disconnect power take-off (page 5-23)

NOTE

Procedures for the removal and installation of the powerplant equipped with an AVDS 1790-2D or AVDS 1790-2DA are similar. Differences are noted in the procedure.

REMOVAL:

1. Reach through engine access cover opening and, using adjustable wrench, unscrew tachometer cable (A) at adapter (B).

2. Using light rope or heavy masking tape, tie free end of tachometer cable to bulkhead support.

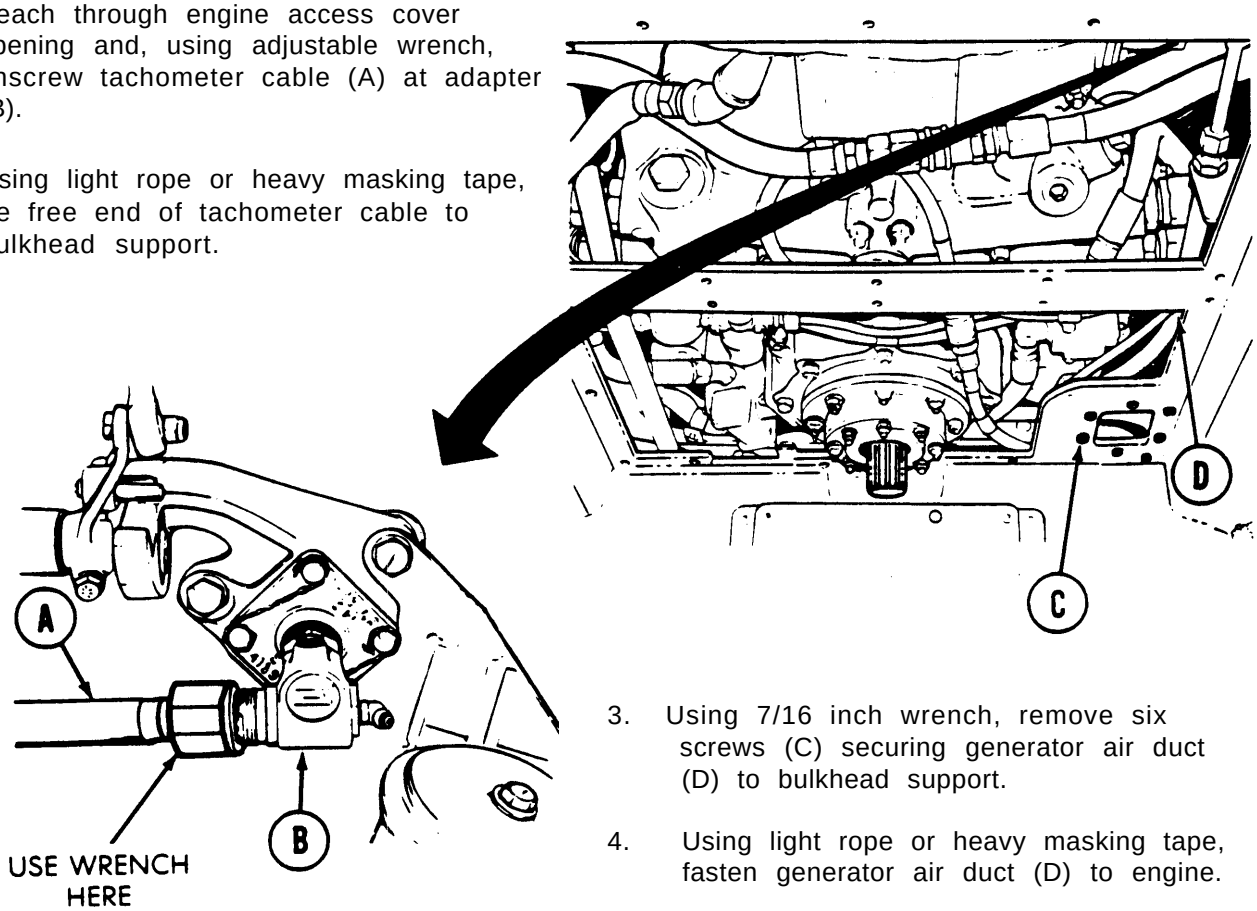

3. Using 7/16 inch wrench, remove six screws (C) securing generator air duct (D) to bulkhead support.

4. Using light rope or heavy masking tape, fasten generator air duct (D) to engine.

Go on to Sheet 3

POWERPLANT REPLACEMENT (Sheet 3 of 21)

5. Using 7/16 inch box end of wrench, remove two bolts (E) securing manual fuel shutoff clevis (F) and accelerator linkage lever (G) to rod ends (H).

6. Separate accelerator linkage lever (G) and fuel shutoff clevis (F) from two rod ends (H).

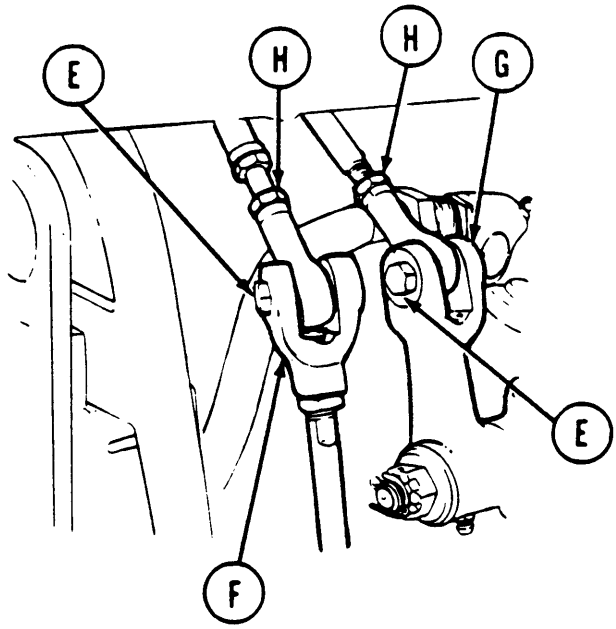

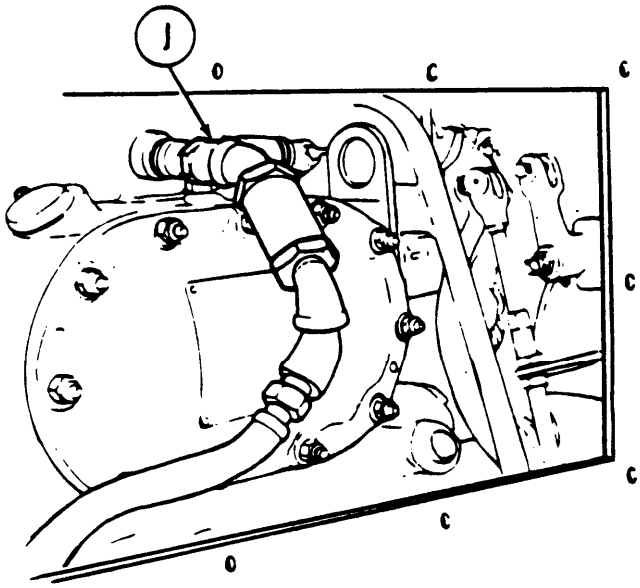

7. Reach through engine access cover opening and disconnect fire extinguisher flexible tubing (J) at quick-disconnect.

8. Tie free end of fuel shutoff clevis (F) and fire extinguisher flexible tubing (J) out of way.

CAUTION

Put protective coverings over fire extinguisher openings.

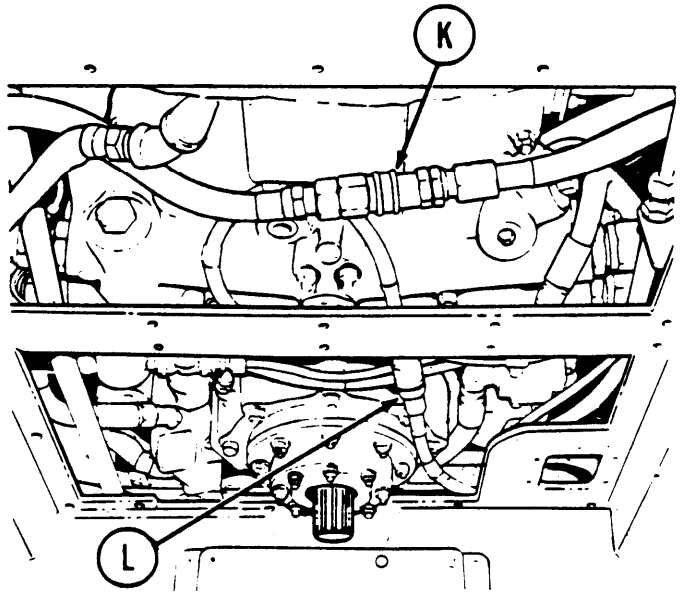

9. Disconnect main fuel line at quick-disconnect fitting (K).

10. Disconnect purge line at quick-disconnect fitting (L).

11. Tie both fuel line and purge hoses out of way at top of powerplant.

Go on to Sheet 4

TA247963

POWERPLANT REPLACEMENT (Sheet 4 of 21)

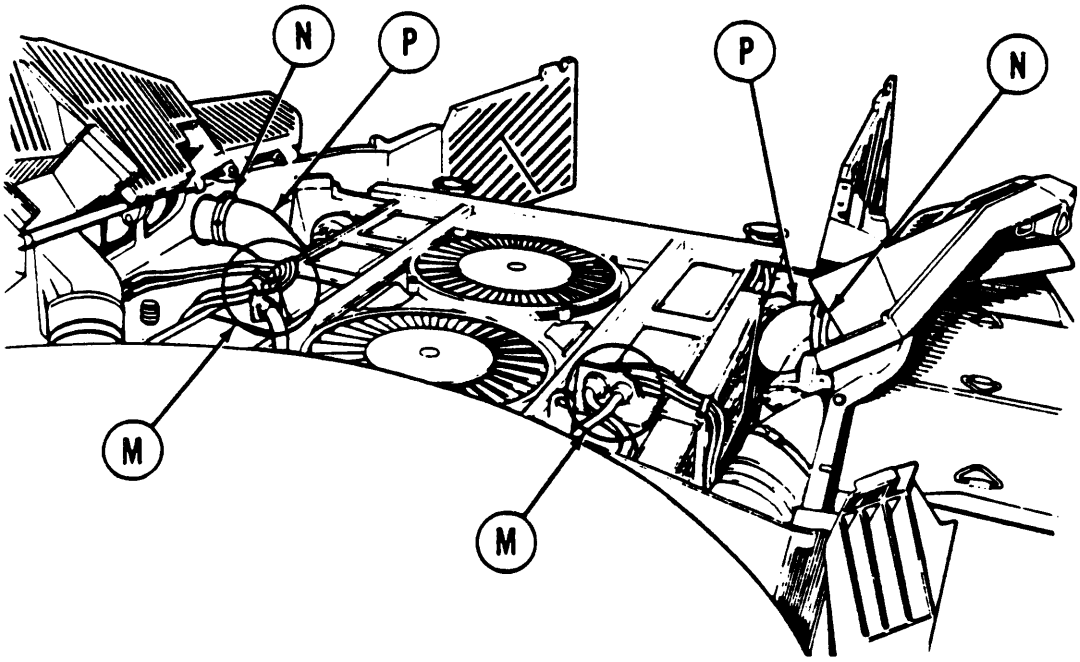

12. Using spanner wrench, disconnect four electrical harness connectors (M) at both sides of powerplant.

13. Using screwdriver, loosen two clamps (N) which hold air cleaner outlet hose (P) at each side of powerplant.

14. Disconnect air cleaner outlet hoses (P). Make sure you cover air cleaner outlet hose openings.

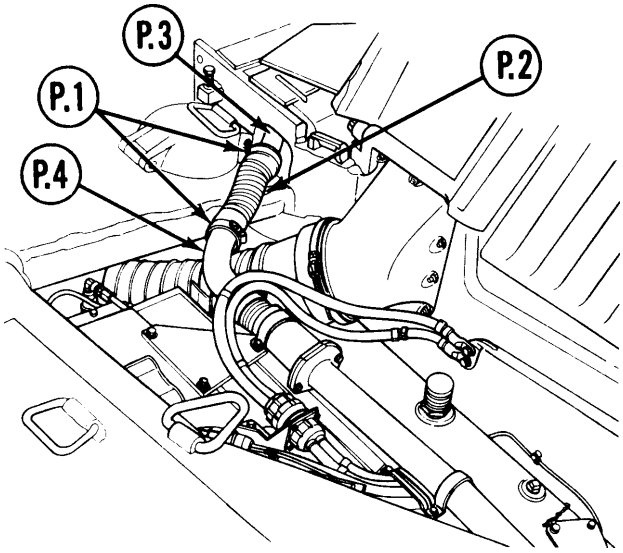

NOTE

If your vehicle is equipped with a 2DA engine, do steps 14.1 and 14.2. If not, proceed to step 15.

14.1 Using screwdriver, loosen two clamps (P.1).

14.2. Slide hose (P.2) off manifold (P.3) and back onto tube (P.4).

Go on to Sheet 5

POWERPLANT REPLACEMENT (Sheet 5 of 21)

15. Using 9/16 inch socket with ratchet and extension, remove six screws (Q), lockwashers (R), and washers (S) securing two angle brackets (T).

N O T E

One angle bracket is located on each side at rear of vehicle.

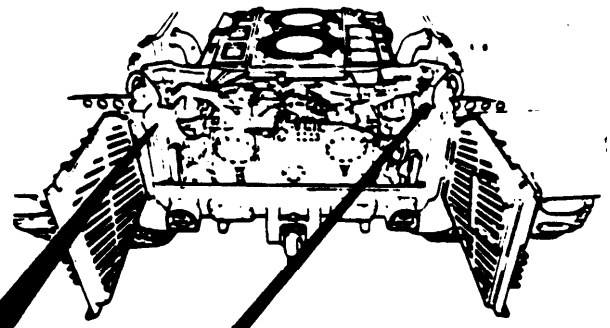

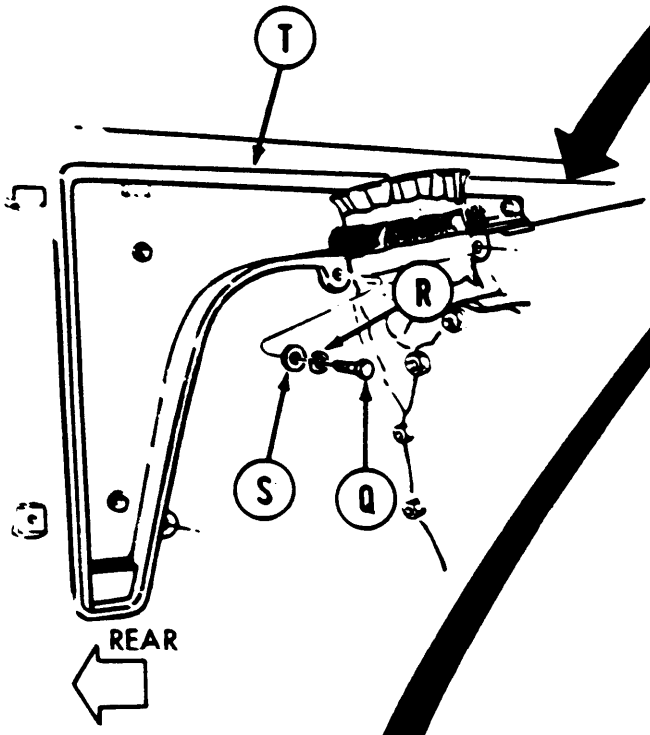

16. Lift up on rear corners of both brackets (T) to remove them.

NOTE

Parking brake cable in engine compartment may be one piece or two piece with quick disconnect. If two piece cable is in your vehicle skip steps 18 through 22. If one piece cable is used skip step 17 and proceed with step 18.

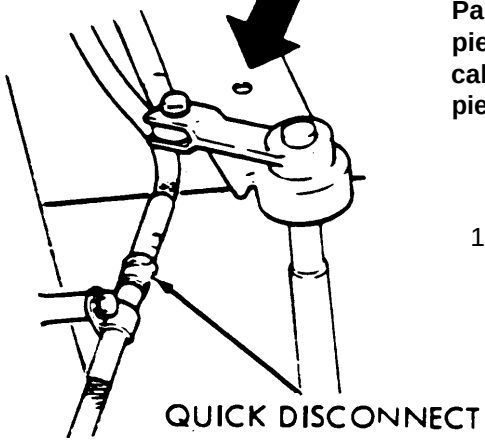

17. Manually turn hex portion of quick disconnect counterclockwise till loose, then displace rear portion of cable.

Go on to Sheet 6

TA247965

POWERPLANT REPLACEMENT (Sheet 6 of 21)

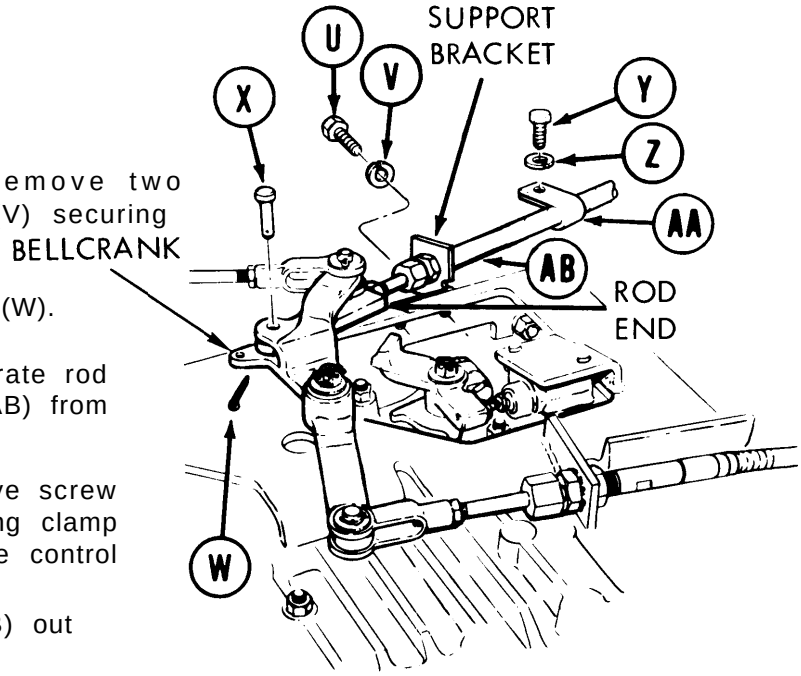

18. Using 9/16 inch socket, remove two screws (U) and lockwashers (V) securing pariing brake support bracket.

19. Using pliers, remove cotter pin (W).

20. Remove straight pin (X). Separate rod end of parking brake control (AB) from bell-crank.

21. Using 7/16 inch wrench, remove screw (Y) and lockwasher (Z) attaching clamp (AA) that secures parking brake control (AB).

22. Move parking brake control (AB) out of way.

23. Using 7/16 inch wrench, remove bolt (AC) securing steering linkage. Displace linkage at left side of transmission.

24. Using cutting pliers, remove lockwire (AD) at right side of transmission.

25. Using 7/16 inch wrench, remove screw (AE) and shifting linkage at right side of transmission.

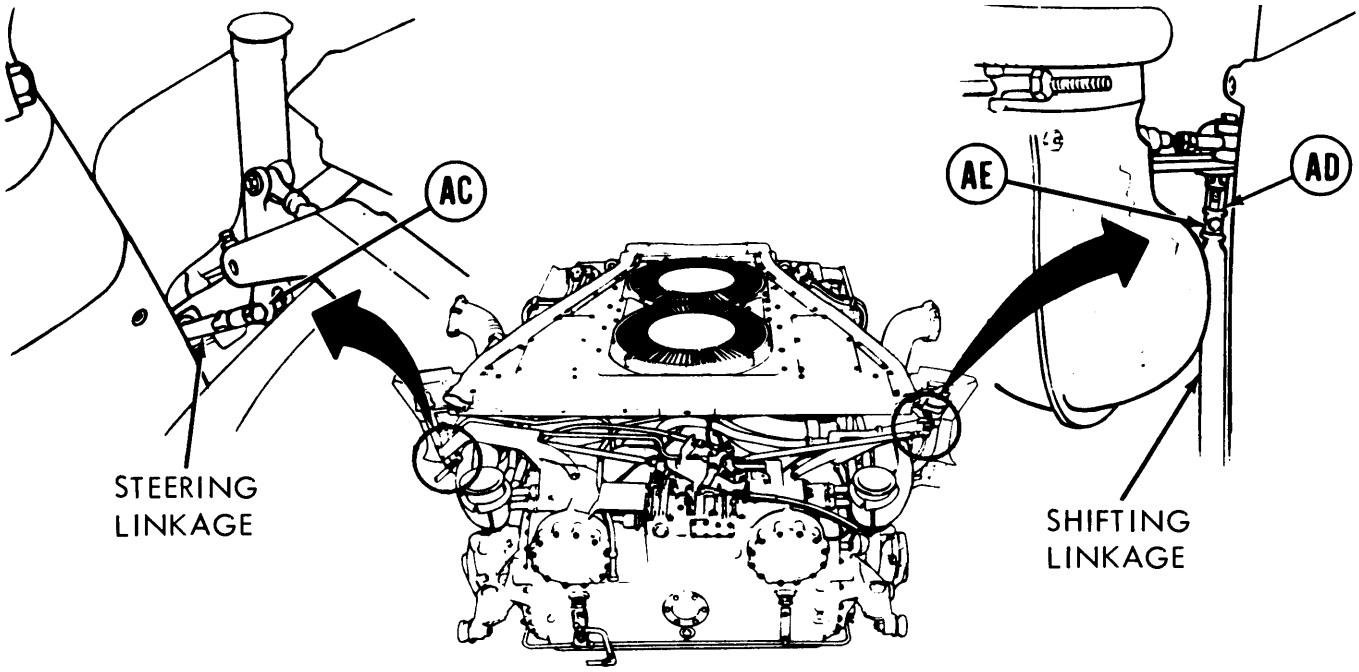

REAR TOP VIEW OF POWERPLANT

Go on to Sheet 7

TA247966

POWERPLANT REPLACEMENT (Sheet 7 of 21)

26. Pull back on quick-disconnect to separate fuel return line at fitting. Cover openings.

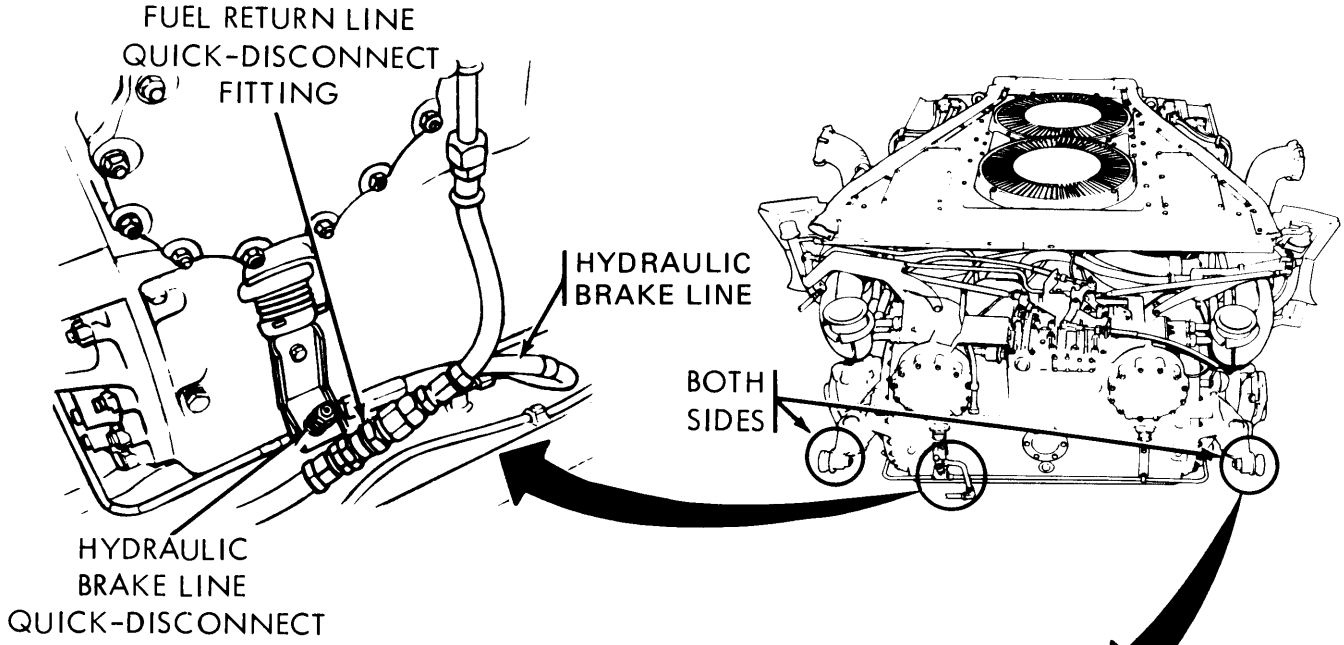

27. Disconnect hydraulic brake line at quick-disconnect fitting.

28. Cover brake line opening so dirt cannot enter.

29. Pull lockring out to unlock powerplant guide. Swing guide backward. Do this at both sides.

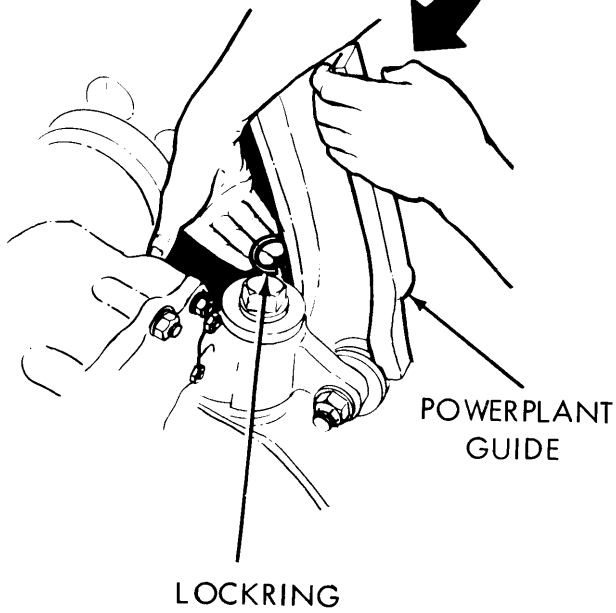

Go on to Sheet 8

TA247967

POWERPLANT REPLACEMENT (Sheet 8 of 21)

30. Make sure powerplant guide lock engages when guide is all the way back.

31. Using cutting pliers, cut lockwire (AF) at final drive on both sides of transmission.

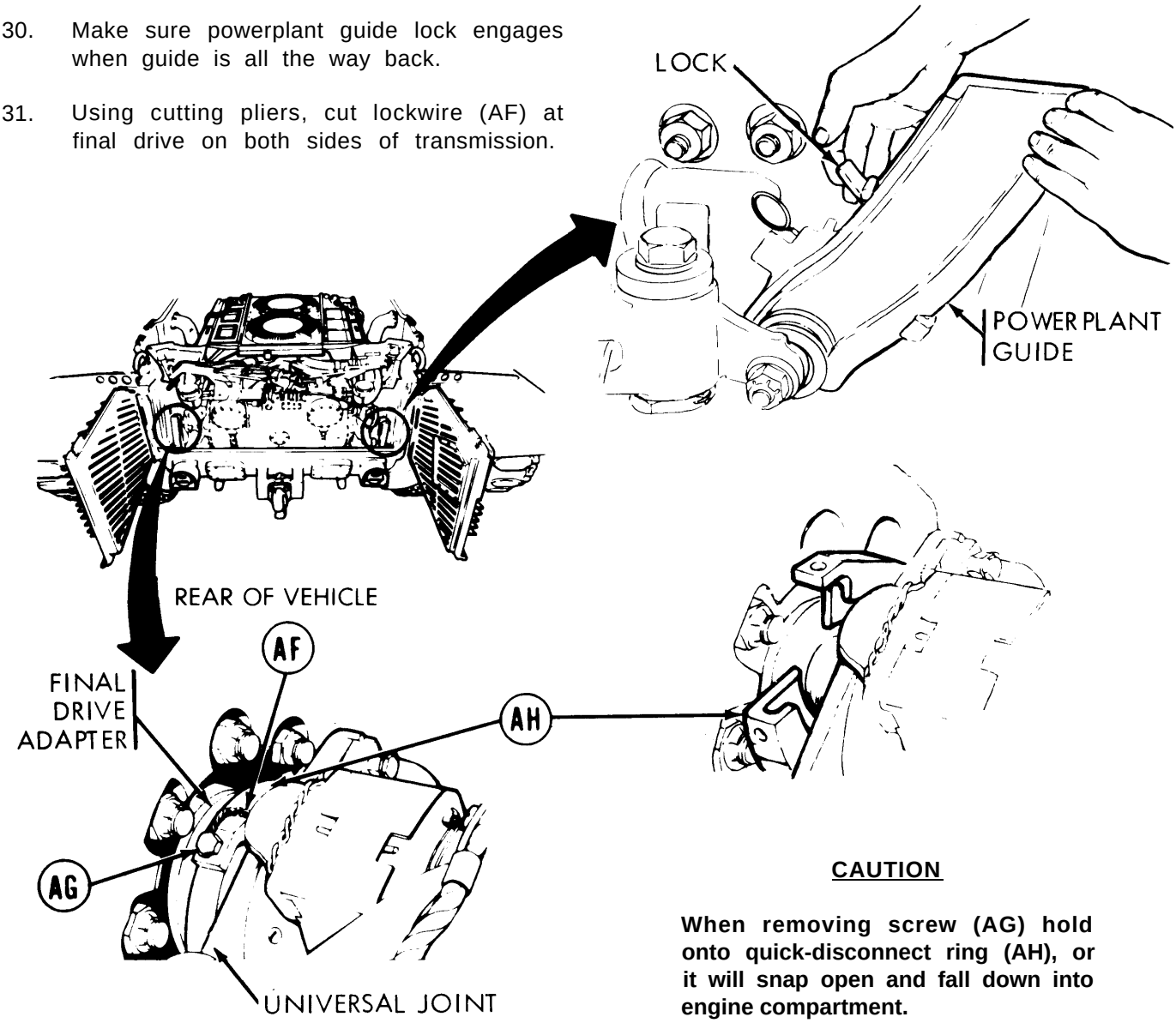

CAUTION

When removing screw (AG) hold onto quick-disconnect ring (AH), or it will snap open and fall down into engine compartment.

32. Using 3/4 inch socket with universal joint, remove screw (AG) securing quick-disconnect ring (AH) from both sides of transmission.

33. Remove ring (AH) from both sides of transmission.

TA247968

Go on to Sheet 9

POWERPLANT REPLACEMENT (Sheet 9 of 21)

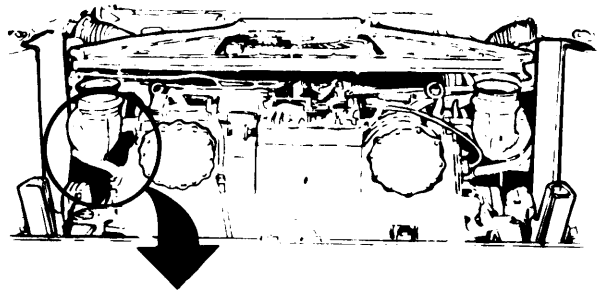

34. Using hammer on pinch bar, tap final drive adapter (AJ) toward final drive (both sides) far enough to free adapter from universal joint.

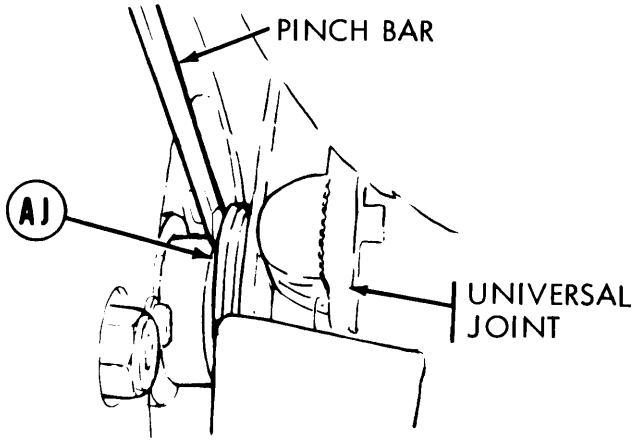

35. Hang fabricated tools (one on each side) at final drive universal joints so there are no hang-ups when powerplant is lifted from compartment.

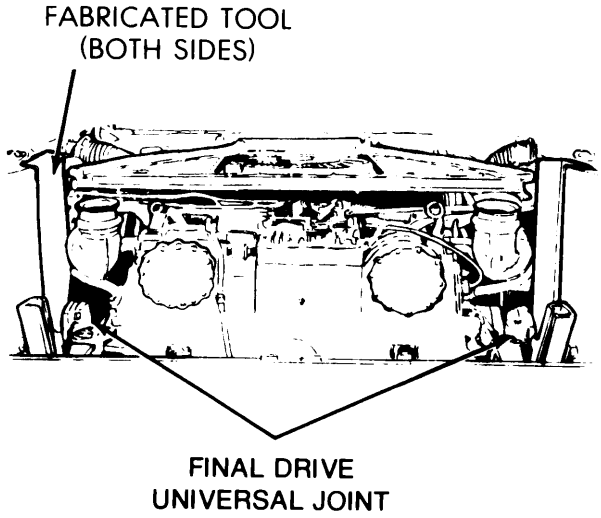

Go on to Sheet 10

POWERPLANT REPLACEMENT (Sheet 10 of 21)

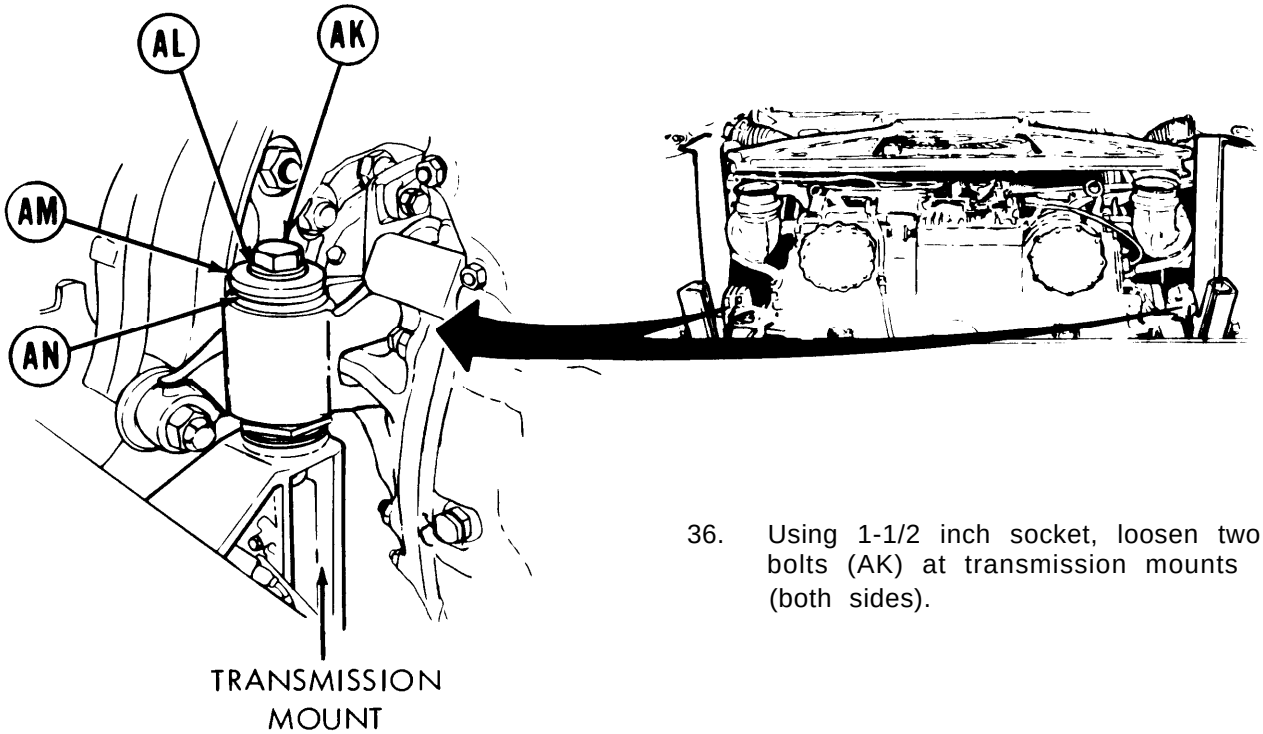

36. Using 1-1/2 inch socket, loosen two bolts (AK) at transmission mounts (both sides).

37. Remove two bolts (AK), lockwashers (AL), recessed washers (AM), and washers (AN) securing two mounting brackets to transmission mounts.

38. Check all disconnected rod and line ends to make sure they are out of way during powerplant removal.

39. Connect hoist hook to sling. Make sure hoist hook is put through hole for powerplant.

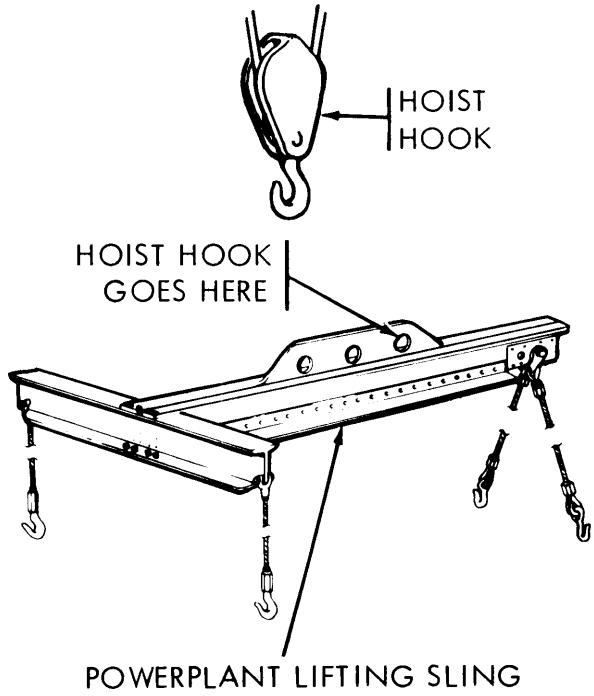

TA247970

Go on to Sheet 11

POWERPLANT REPLACEMENT (Sheet 11 of 21)

40. Using hoist with sling, position sling over powerplant so “T” end is to front of vehicle.

41. Attach four chain hooks of sling to four lifting eyes on powerplant. Make sure hook ends are toward outside of powerplant.

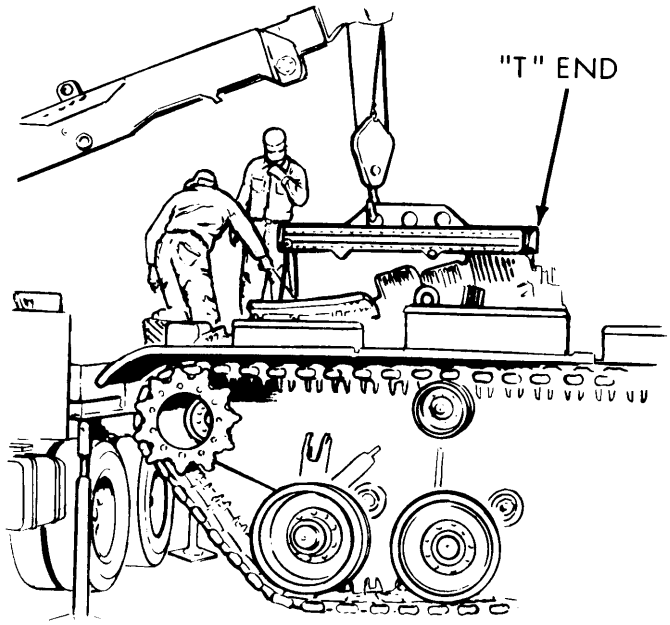

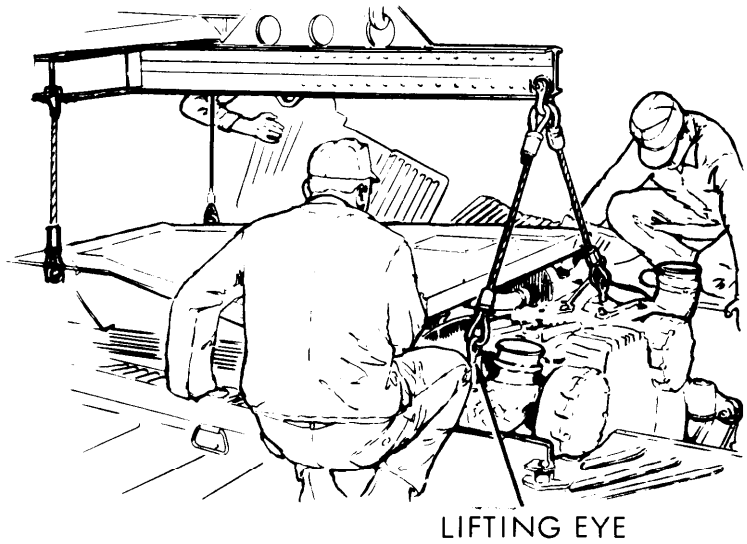

42. Have persons station themselves to help guide powerplant as it is hoisted out of vehicle.

WARNING

Be careful when lifting powerplant. Serious injury to personnel can result from careless handling. Also, powerplant can be damaged if bumped against hull.

43. Lift powerplant in short, even lifts.

44. Move hoist rearward between lifts. Rear of powerplant comes out first.

Go on to Sheet 12

TA247971

POWERPLANT REPLACEMENT (Sheet 12 of 21)

45. Remove powerplant. Move it away from vehicle. Lower it to a few feet above ground level.

46. Position three wooden blocks under powerplant for support.

47. One block goes under left side of transmission.

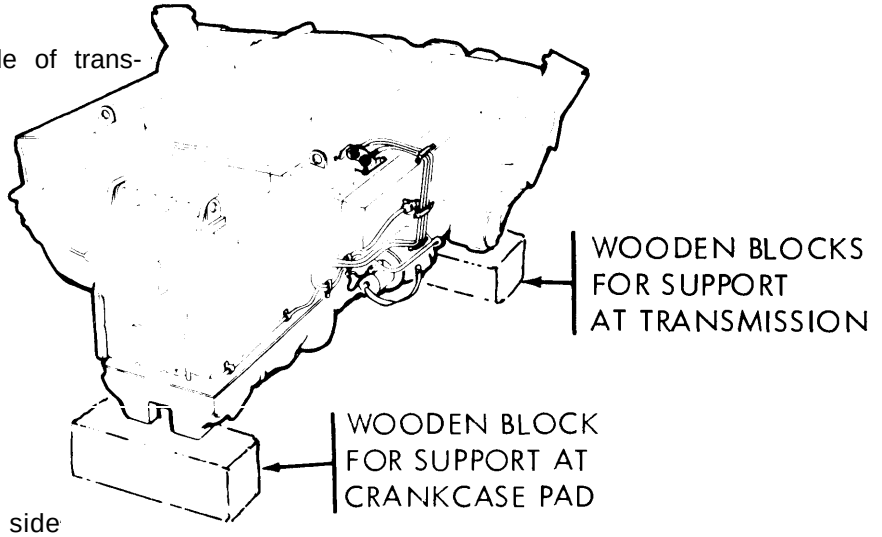

48. Other block goes under right side of transmission.

49. Third block goes under crankcase pad at front of engine.

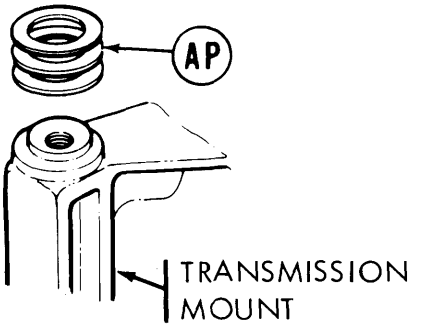

50. Lower powerplant carefully onto supporting blocks.

51. Remove six spring washers (AP) (three each side) from transmission mounts.

52. Detach four chain hooks of sling from lifing eyes of powerplant, if required.

Go on to Sheet 13

TA247972

POWERPLANT REPLACEMENT (Sheet 13 of 21)

INSTALLATION:

1. Install six spring washers (A) (three each side) on transmission mounts.

2. Make sure all surfaces in compartment are clean. If not, clean engine compartment.

2.1 Install final drive adapter hook-up tool in final drive adapter splines with opening pointed up and slightly back (1 or 2 teeth from level position).

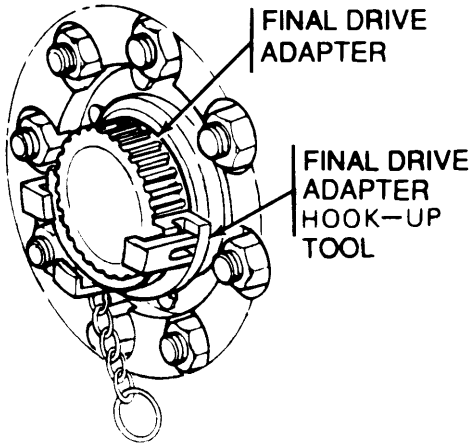

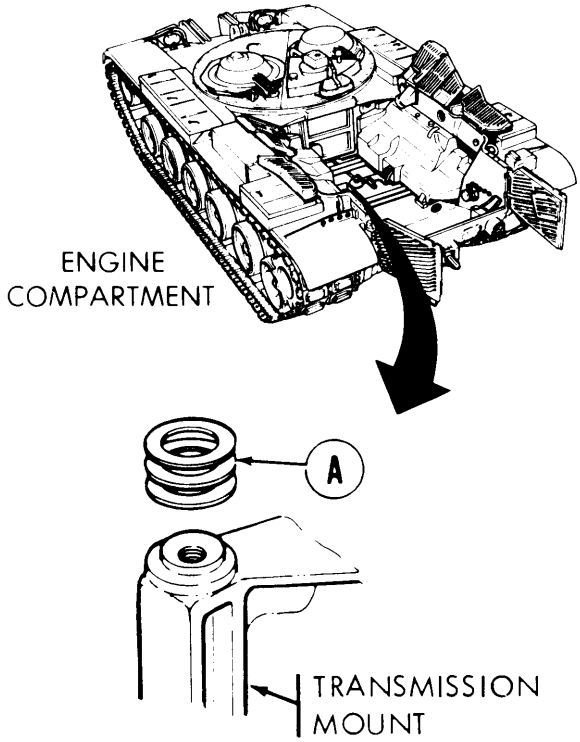

3. Apply light coat of grease to contact surfaces of engine and transmission mounts.

NOTE
"T" end of sling should be toward front (engine end of powerplant).

4. Make sure hoist hook is in powerplant hole of sling.

5. Using hoist, pick up sling and install, four chain hooks through four lifting eyes on powerplant.

6. Ends of chain hooks should point toward outer side of powerplant.

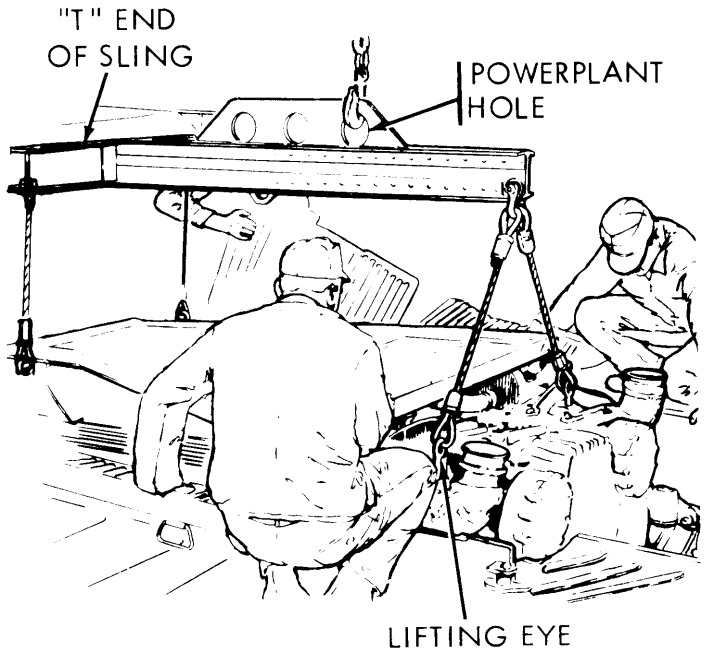

Go on to Sheet 14

POWERPLANT REPLACEMENT (Sheet 14 of 21)

WARNING

Be careful when lifting powerplant. Serious injury to personnel can result from careless handling. Also, powerplant can be damaged if bumped against hull.

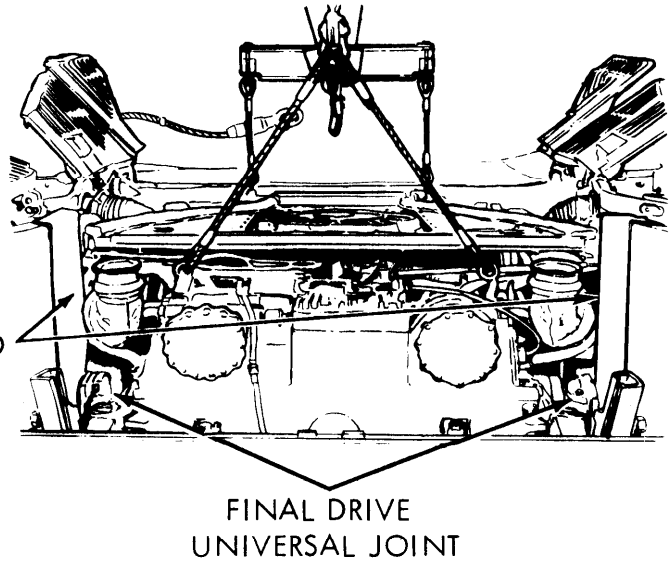

7. Using hoist with sling, lift powerplant over open grille doors into position over engine compartment.

8. Position final drive guide shields on both sides of engine compartment so they cover the final drive mounting adapters.

9. Use persons as shown in picture to guide powerplant.

10. Lower powerplant slowly with frequent stops.

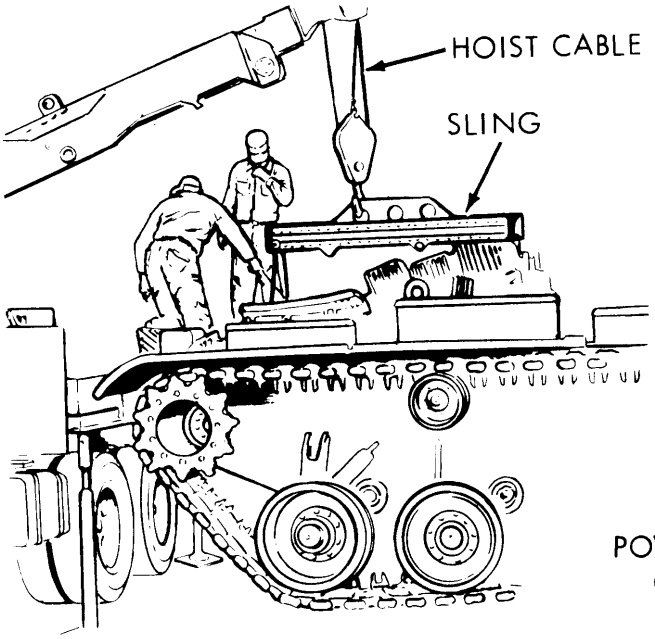

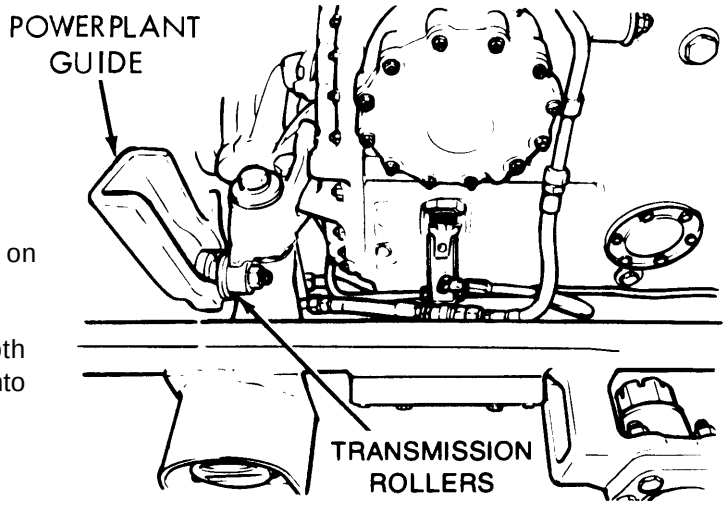

11. Guide mounts of engine to engine guides on hull floor.

12. Make sure transmission rollers fit into both powerplant guides and lower powerplant into position.

Go on to Sheet 15

POWERPLANT REPLACEMENT (Sheet 15 of 21)

NOTE

When powerplant is in place, the universal joint and final drive adapter will be axially alined.

12.1. While slowly lowering powerplant, aline universal joint so lip enters tool guides.

WARNING

Do not place your hands inside the engine compartment. Serious injury may result if powerplant shifts unexpectedly.

12.2. Using pry bar or rope, rotate universal joint to aline splines with final drive adapter splines.

13. When powerplant is seated, remove final drive guide shields, and retrieve final drive adapter hook-up tool.

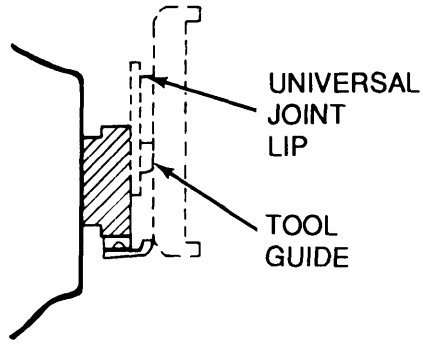

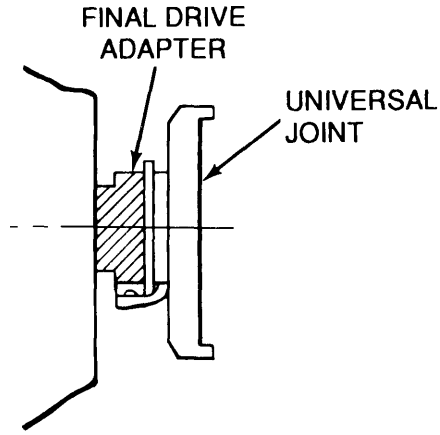

Go on to Sheet 15.1

POWERPLANT REPLACEMENT (Sheet 15.1 of 21)

14. Check that powerplant is correctly seated. Check all clearances around powerplant.

15. Remove four sling chain hooks from four lifting eyes of powerplant.

16. Install washer (A), recessed washer (B), lockwasher (C), and bolt (D) (both sides).

17. Using 1-1/2 inch socket and torque wrench, tighten bolt (D) securing transmission mounting bracket to 370-375 lb-ft (501-508 NŽm).

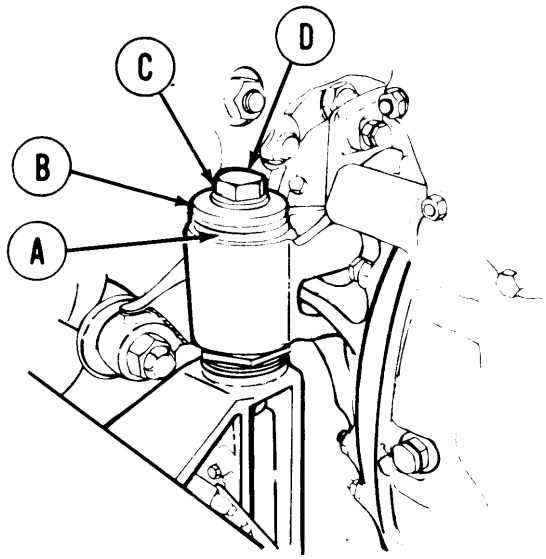

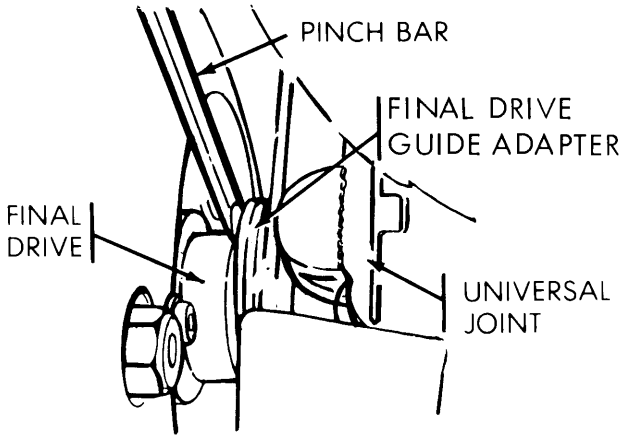

18. Have second technician hold universal joint with final drive guide adapter.

19. Using pinch bar, pry final drive adapter away from final drive into universal joint (each side).

20. Fit quick-disconnect ring (E) around final drive adapter.

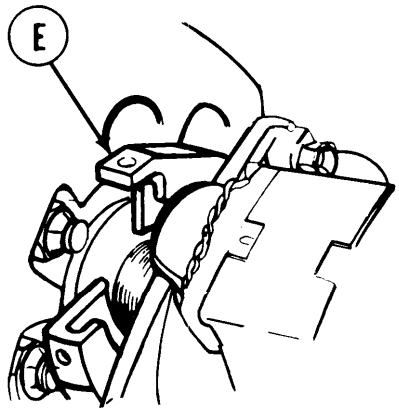

Go on to Sheet 16

POWERPLANT REPLACEMENT (Sheet 16 of 21)

21. Install screw (F). Using 3/4 inch socket, tighten screw on each side. Torque screw (F) to 10 to 20 lb-ft (14 to 27 NŽm)
22. String lockwire (G) through screw (F) and opening in ring (H) on each side.
23. Raise guide lock latch.

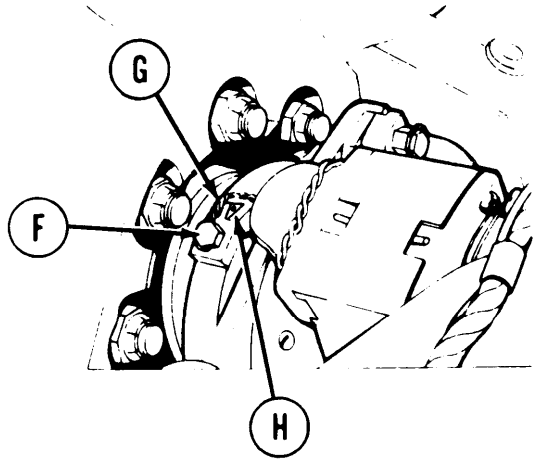

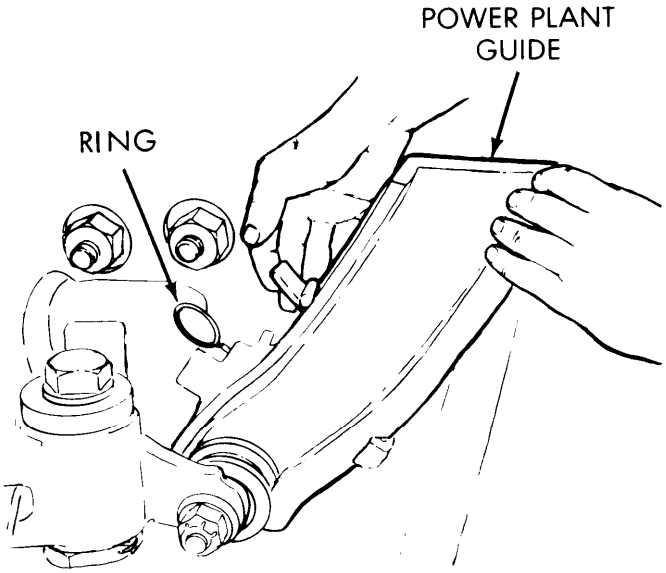

24. Push powerplant guide forward until lockring snaps into place.
25. Lay parking brake cable on top of transmission. Position angle bracket (J) to rear side wall (by powerplant wide). Hang tab of bracket onto tab on compartment side wall on each side.

26. Install three screws (K), lockwashers (L), and washers (M) to secure angle bracket (J) to side wall (both sides).
27. Using 9/1 6 inch socket and 5 inch extension, tighten three screws (K) (both sides) to secure bracket (J) to side wall.

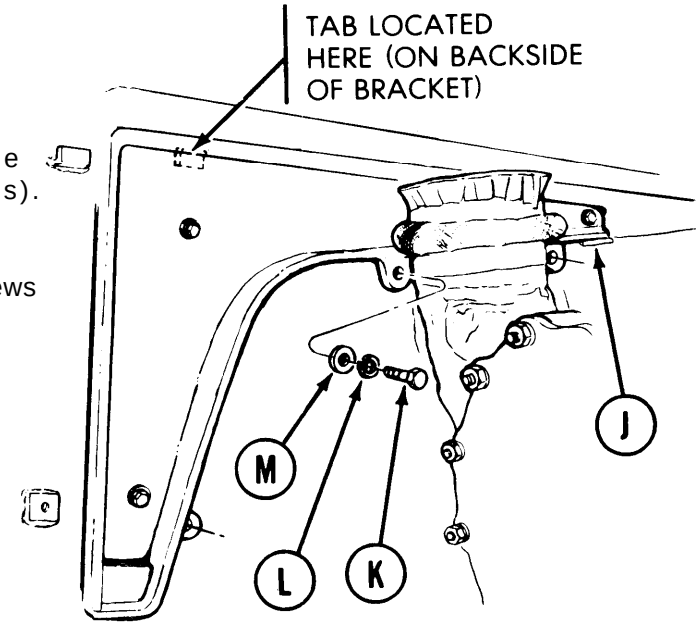

TA247976

Go on to Sheet 17

POWERPLANT REPLACEMENT (Sheet 17 of 21)

28. Remove protective coverings from openings on hydraulic brake lines and fittings.

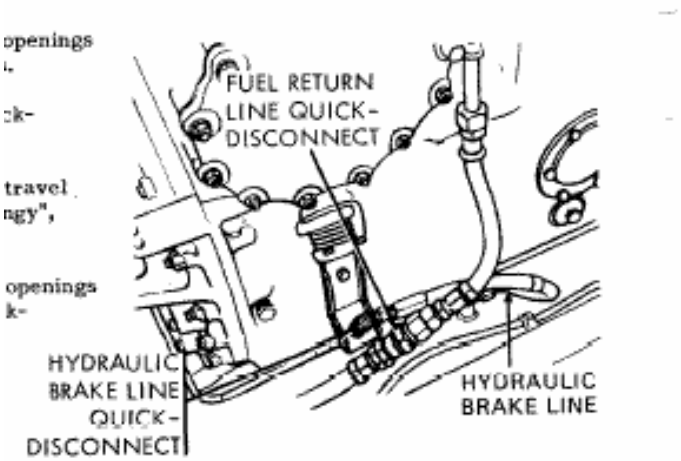

WARNING

Failure to correctly connect quick disconnect (full engagement) will result in brake failure and could cause serious injury or death.

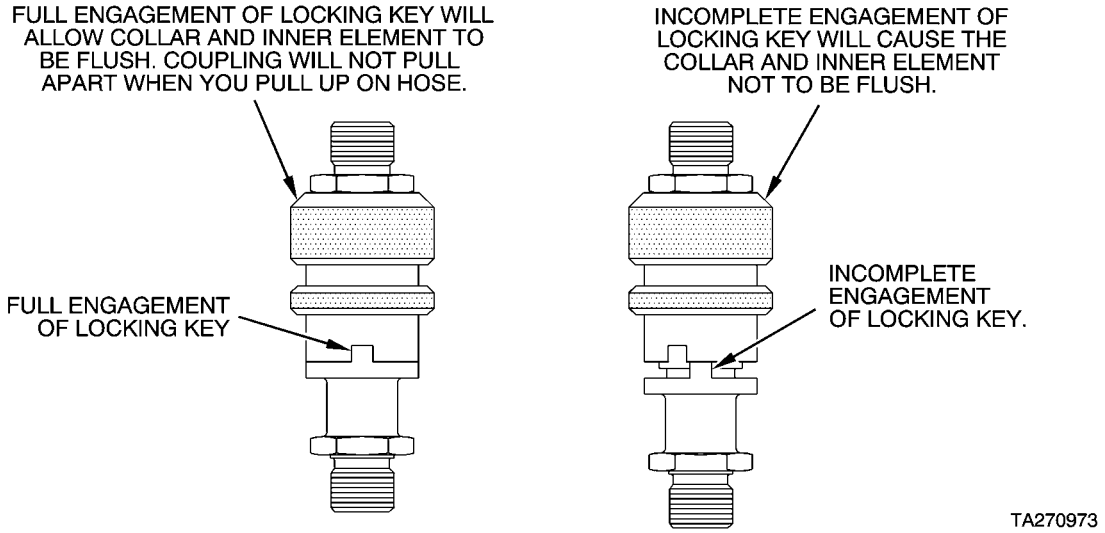

Go on to Sheet 17.1

POWERPLANT REPLACEMENT (Sheet 17.1 of 21)

29. Connect hydraulic brake line at quick-disconnect.

30. Check brake pedal travel. If pedal travel seems too much or brakes feel “spongy”, bleed brakes (page 13-86).

31. Remove protective coverings from openings and connect fuel return line at quick-disconnect fitting.

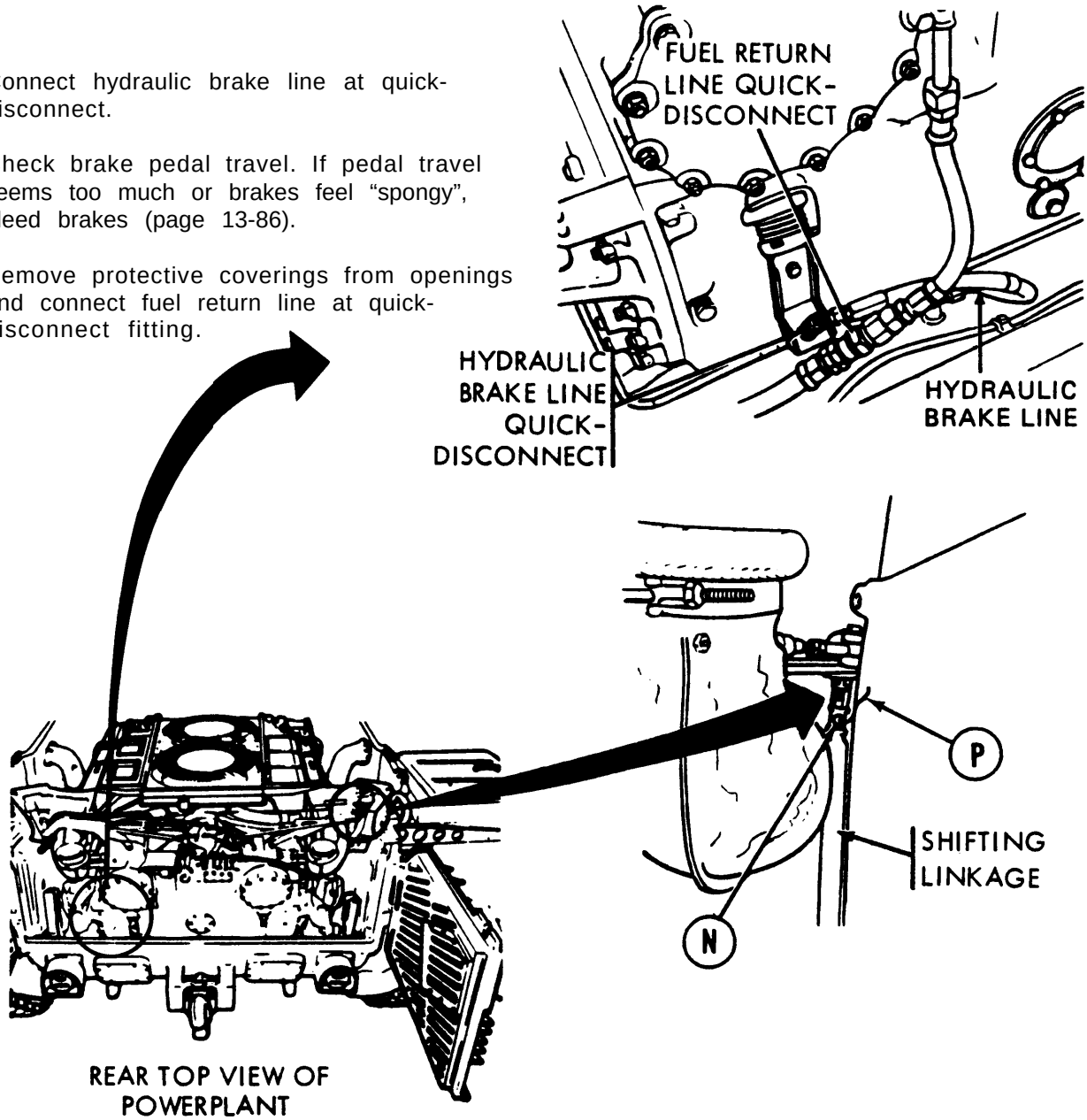

32. Install shifting linkage.

33. Put two flat sides of shifting linkage together.

34. Install screw (N), using 7/16 inch socket, tighten screw (N).

35. Using pliers, install lockwire (P) through screw (N) and around shifting linkage.

Go on to Sheet 18

TA247977

POWERPLANT REPLACEMENT (Sheet 18 of 21)

NOTE

If two place parking brake cable is used skip steps 39 through 48. If one piece cable is used skip step 38 and proceed with step 39.

CAUTION

To prevent bending of control rod, tighten hex of quick disconnect only slightly more than finger tight.

36. On right side of powerplant, position steering linkage into connecting link (Q).

37. Install screw (R) and tighten, using 7/16 inch wrench.

38. Carefully position (don't twist) rear cable, Using 7/8 inch wrench, connect quick-disconnect.

39. Position parking brake control rod end into bellcrank clevis.

40. Push straight pin (S) into holes to secure rod end to clevis.

41. Using pliers, install cotter pin (T) into pin (S).

42. Position control rod support bracket (U) to brake control bracket.

43. Install two lockwashers (V) and screws (W) to secure support bracket (U).

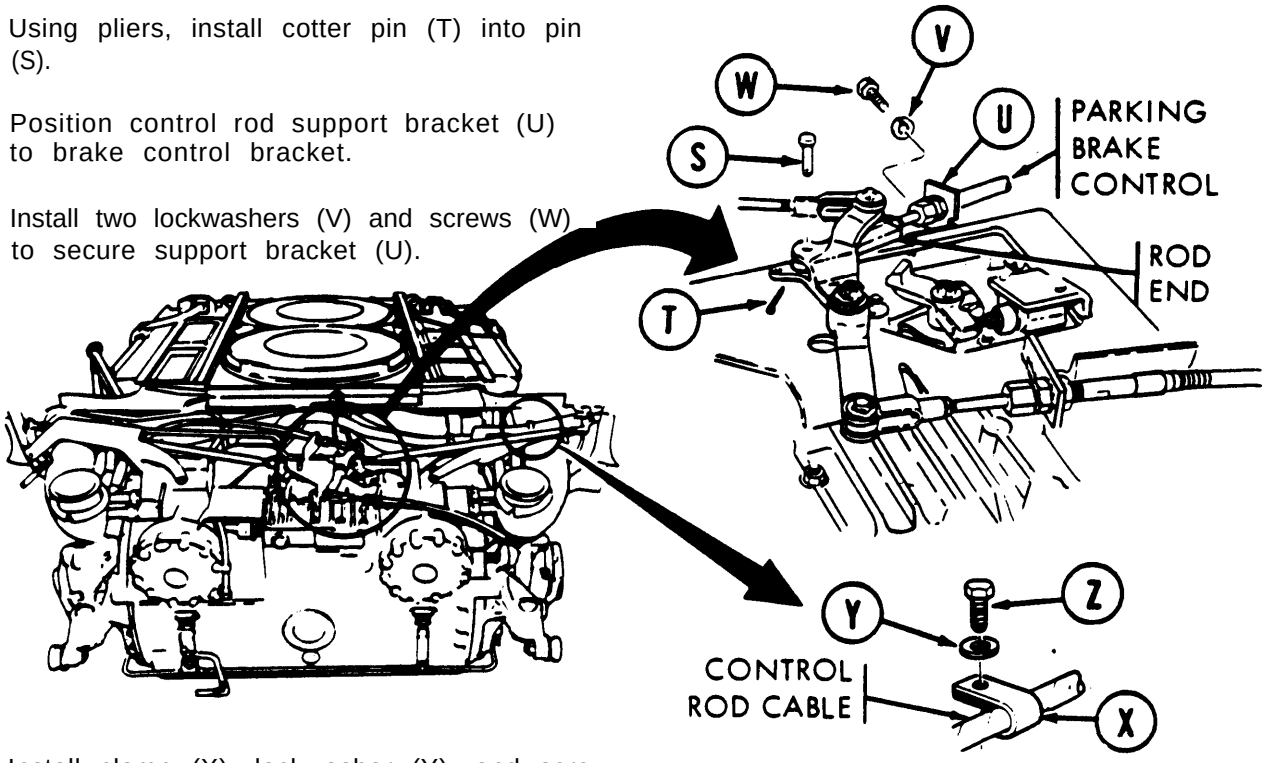

45. Install clamp (X), lockwasher (Y), and screw (Z) to secure control rod cable to powerplant.

46. Using 7/16 inch socket, tighten screw (Z).

Go on to Sheet 19

TA247978

POWERPLANT REPLACEMENT (Sheet 19 of 21)

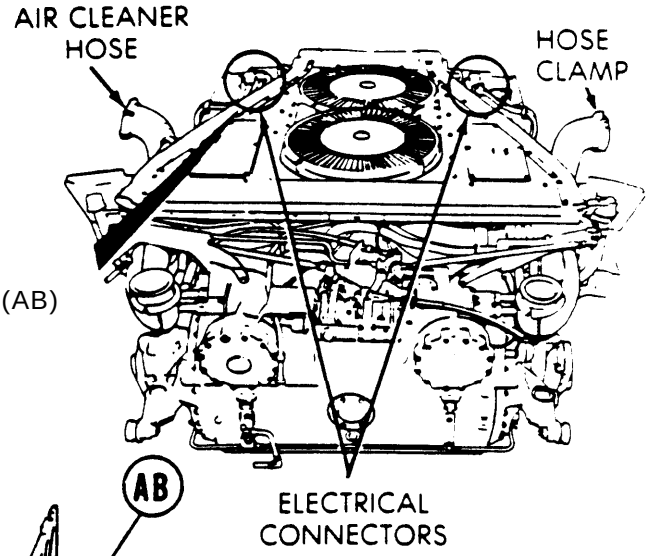

47. Remove coverings from air cleaner outlet hose openings, one on each side.

48. Position two air cleaner hoses (AA) (one each side) over air cleaner outlet openings.

49. Using screwdriver, tighten two hose clamps (AB) (one at each side).

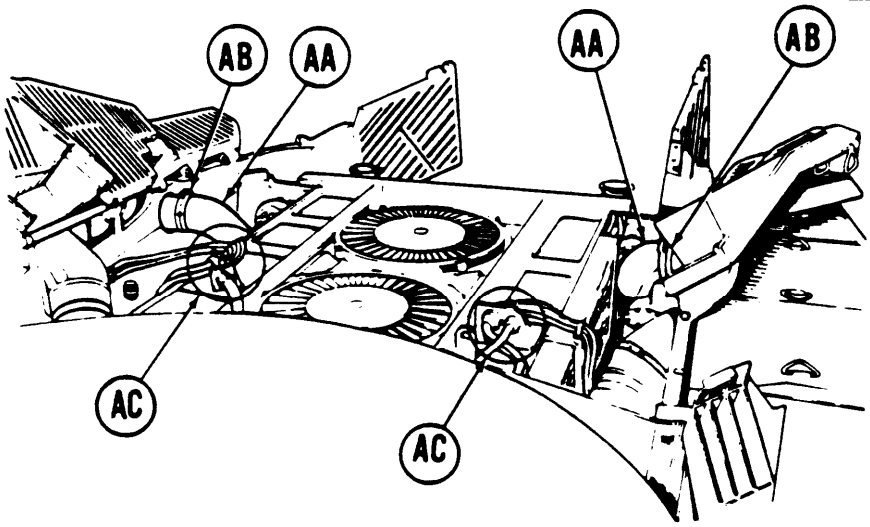

50. Connect four electrical connectors (AC) (two each side at top of powerplant).

NOTE

If your vehicle is equipped with a 2DA engine, do steps 50.1 and 50.2. If not, proceed to step 51.

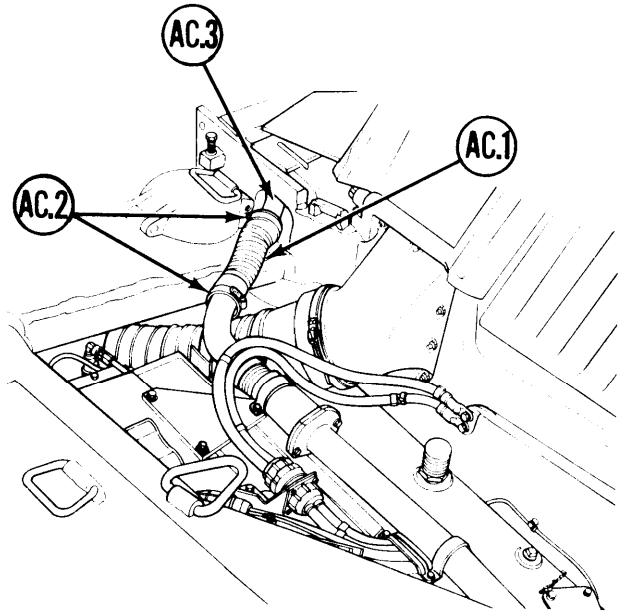

50.1. Slide hose (AC.1) and clamp (AC.2) up over manifold tube (AC.3).

50.2. Using screwdriver, tighten clamps (AC.2).

Go on to Sheet 19.1

POWERPLANT REPLACEMENT (Sheet 19.1 of 21)

51. Go inside crew compartment to gain access to engine.

52. Remove protective coverings from openings on fuel lines.

53. Connect primary fuel hose (AD) to quick-disconnect fitting.

54. Connect purge line hose (AE) to quick-disconnect fitting.

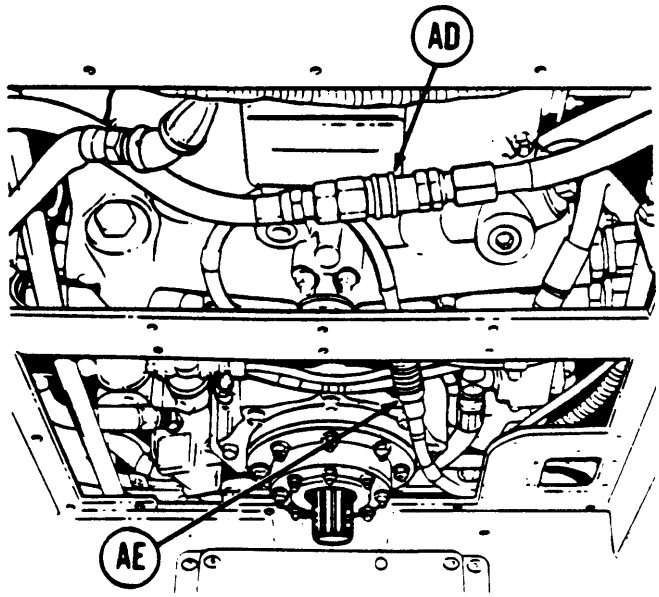

Go on to Sheet 20

POWERPLANT REPLACEMENT (Sheet 20 of 21)

55. Reach through upper access cover opening, Connect fire extinguisher flexible tubing quick-disconnect (AF) to self-sealing socket (AG).

56. Mount rod ends (AH) to accelerator linkage lever (AJ) and fuel shutoff clevis (AK).

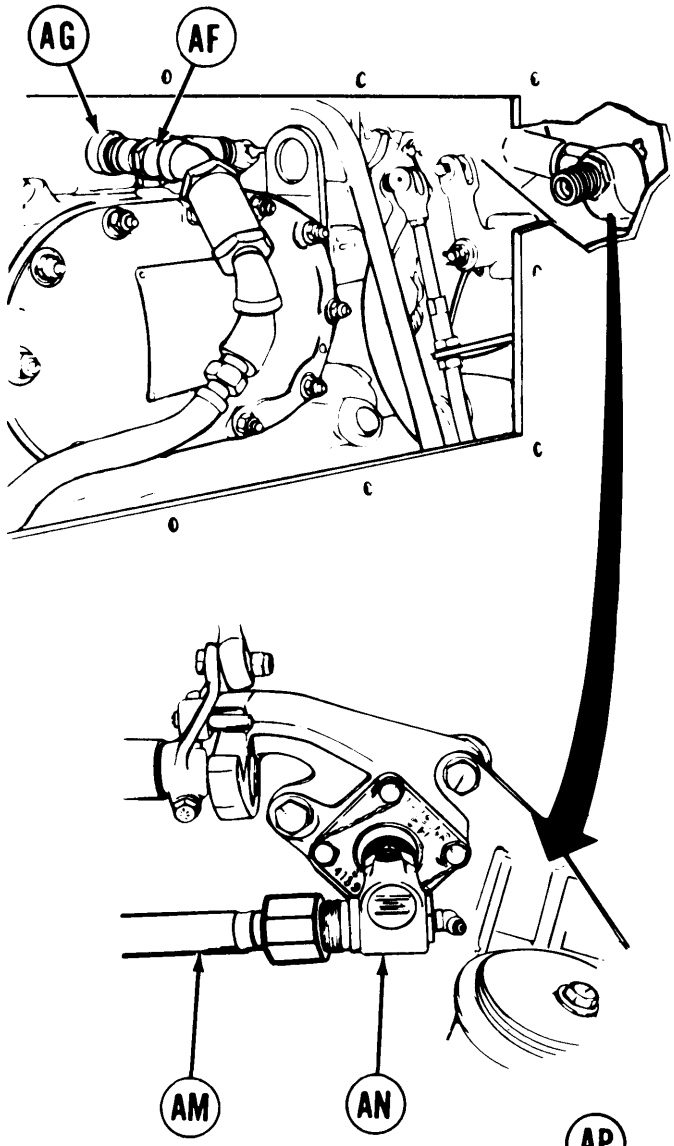

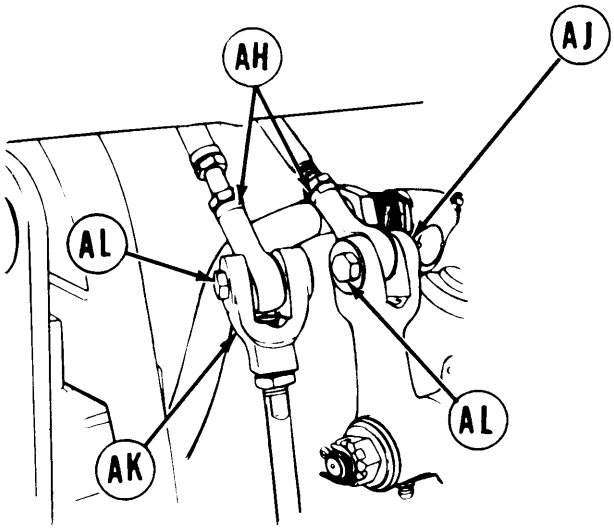

57. Install two self-locking bolts (AL). Using 7/16 inch wrench, tighten both bolts (AL).

58. Install tachometer cable (AM) onto adapter (AN).

59. Using adjustable wrench, tighten cable (AM) onto adapter (AN).

60. Position generator air duct (AP) to bulkhead.

61. Using 7/16 inch wrench, install six screws (AQ) to secure generator air duct (AP) to bulkhead.

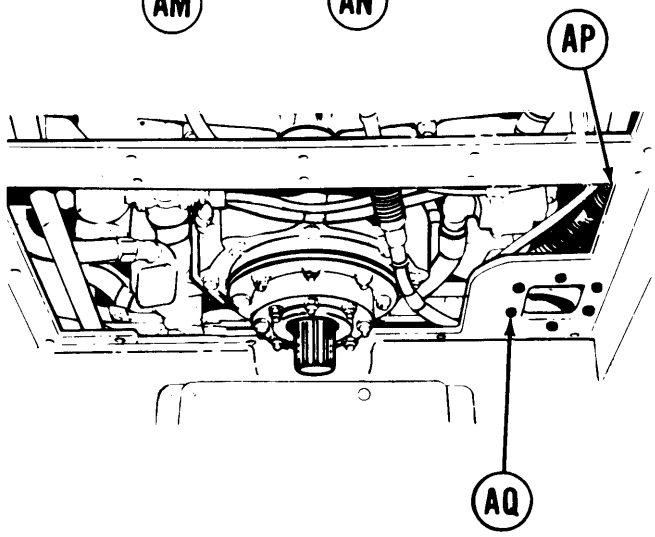

TA247980

Go on to Sheet 21

POWERPLANT REPLACEMENT (Sheet 21 of 21)

62. Install transmission shroud (page 9-6).
63. Install top deck (page 16-23).
64. Remove blocks from front and rear of vehicle.
65. Install engine upper access cover (page 17-12).
66. Connect three battery ground straps (page 10-268).
67. Perform operational check (TM 5-5420-202-10).

End of Task

POWER TAKE-OFF DISCONNECT (Sheet 1 of 2)

TOOLS: 7/16 in. combination box and open end wrench
Torque wrench with 3/8 in. drive (0-600 lb-in.) (0-68 NŽm)

PRELIMINARY PROCEDURE: Remove universal joint cover (TM 5-5420-228-24).

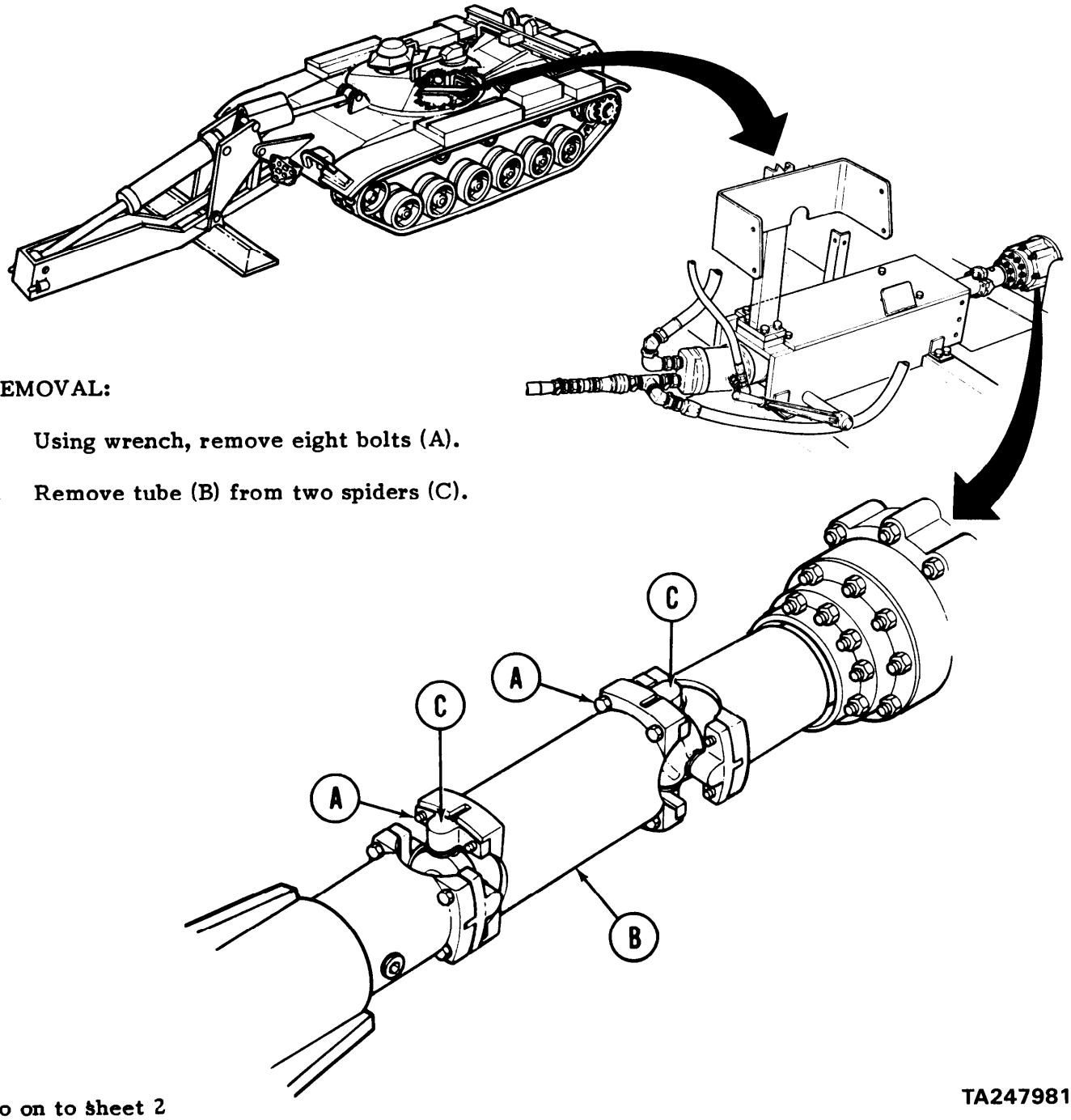

REMOVAL:

1. **Using wrench, remove eight bolts (A).**
2. **Remove tube (B) from two spiders (C).**

Go on to sheet 2

TA247981

POWER TAKE-OFF DISCONNECT (Sheet 2 of 2)

INSTALLATION:

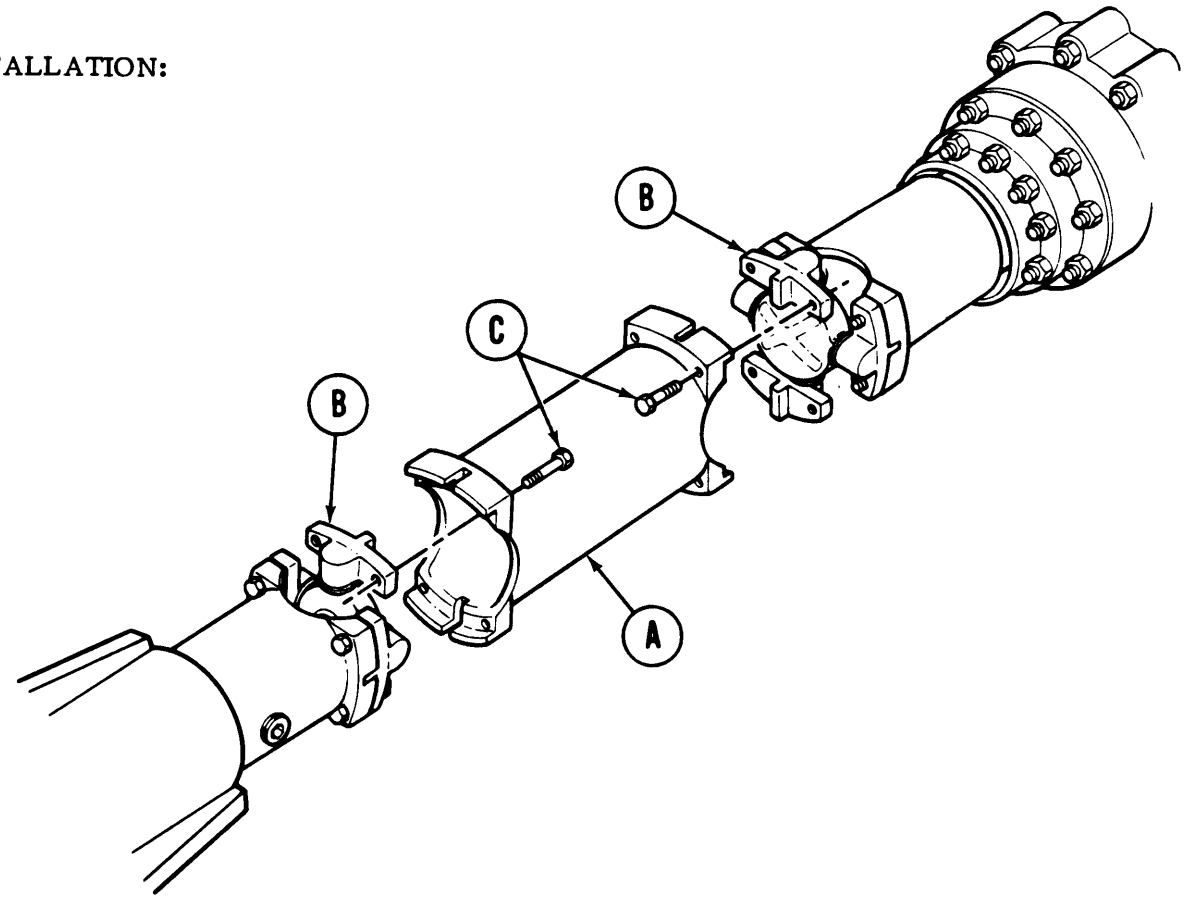

1. Install tube (A) between two spiders (B).

2. Using wrench, install eight screws (C) to tube (A). Tighten screws to 265 to 325 lb-in (30-36 NŽm).

3. Install universal joint cover (TM 5-5420-228-24).

End of Task

TA247982

POWERPLANT TESTS (GROUND HOP) (Sheet 1 of 16)

NOTE

If you have and choose to use STE/ICE, there are two tests which you can perform.

Test No.	**13**	**(Page 4-76)**
	14	**(Page 4-86)**

PROCEDURE INDEX

PROCEDURE	PAGE
Test Hookup	5-27
Idle Test	5-30
Governed No-Load Test	5-31
Stall Test	5-33
Engine Fuel Leak Checks	5-38
After Test Disconnect	5-40

Go on to Sheet 2

POWERPLANT TESTS (GROUND HOP) (Sheet 2 of 16)

TOOLS: 1/2 in. combination box and open end wrench
9/16 in. combination box and open end wrench
3/4 in. combination box and open end wrench
Flat-tip screwdriver
Ratchet with 1/2 in. drive
Torque wrench with 1/2 in. drive (0-175 lb-ft) (0-237 NŽm)
1-1/4 in. socket with 1/2 in. drive
7/16 in. deepwell socket with 1/2 in. drive

SPECIAL TOOLS: Ground hop kit (Item 31, Chapter 3, Section I)
Sleeve spacer (Item 2, Chapter 3, Section I)

FABRICATED TOOLS: Tachometer assembly (Fig. F-2, Appendix F)
Throttle linkage adjusting go/no-go gage (Fig. F-3, Appendix F)

PERSONNEL: Three

REFERENCES: TM 5-5420-202-10
LO 5-5420-202-12

PRELIMINARY PROCEDURE: Remove powerplant (page 5-2)

NOTE

Anyone complete powerplant test can be performed separate from the other tests. Powerplant tests need not be performed in specific order. If more than one test is to be performed, do not disconnect test hookup.

Disconnect test hookup only when test or tests are complete.

Go onto Sheet 3

POWERPLANT TESTS (GROUND HOP) (Sheet 3 of 16)

Test **Hookup (Sheet 1 of 3)**

1. Position and support powerplant so that there is free air circulation and access to all sides of powerplant.

2. Position powerplant close to hull to permit connection of electrical cable assemblies and fuel hose assemblies.

3. Connect cable assemblies and hose assemblies to powerplant as shown.

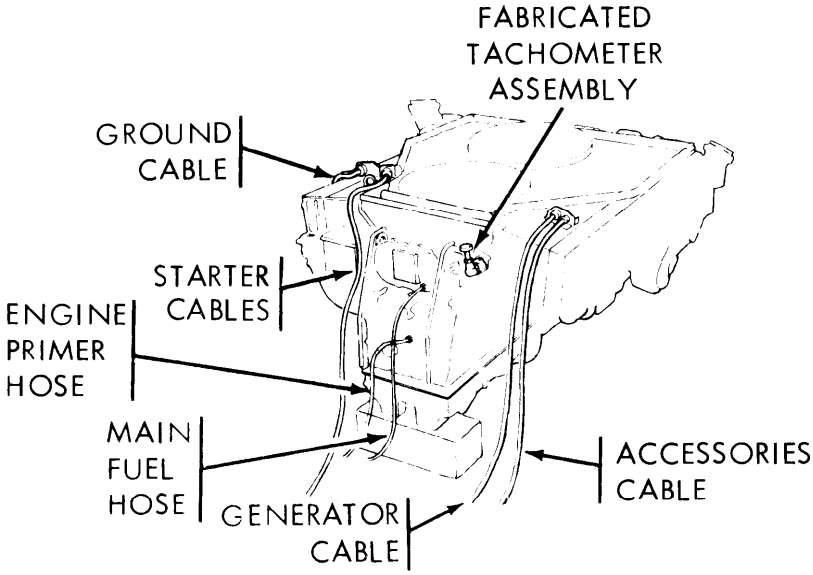

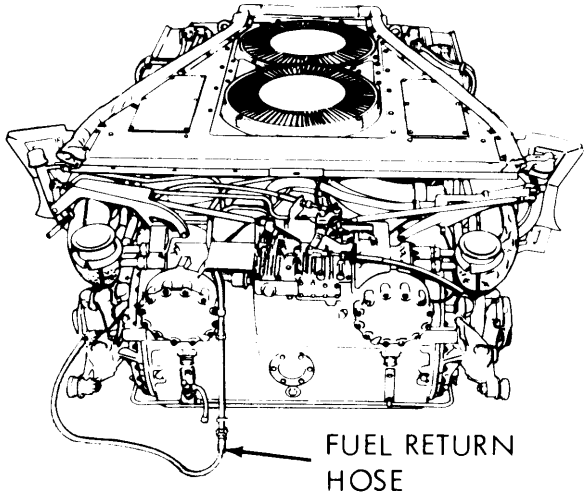

Go on to Sheet 4

POWERPLANT TESTS (GROUND HOP) (Sheet 4 of 16)
Test Hookup (Sheet 2 of 3)

4. Connect cable assemblies and hose assemblies to hull as shown.

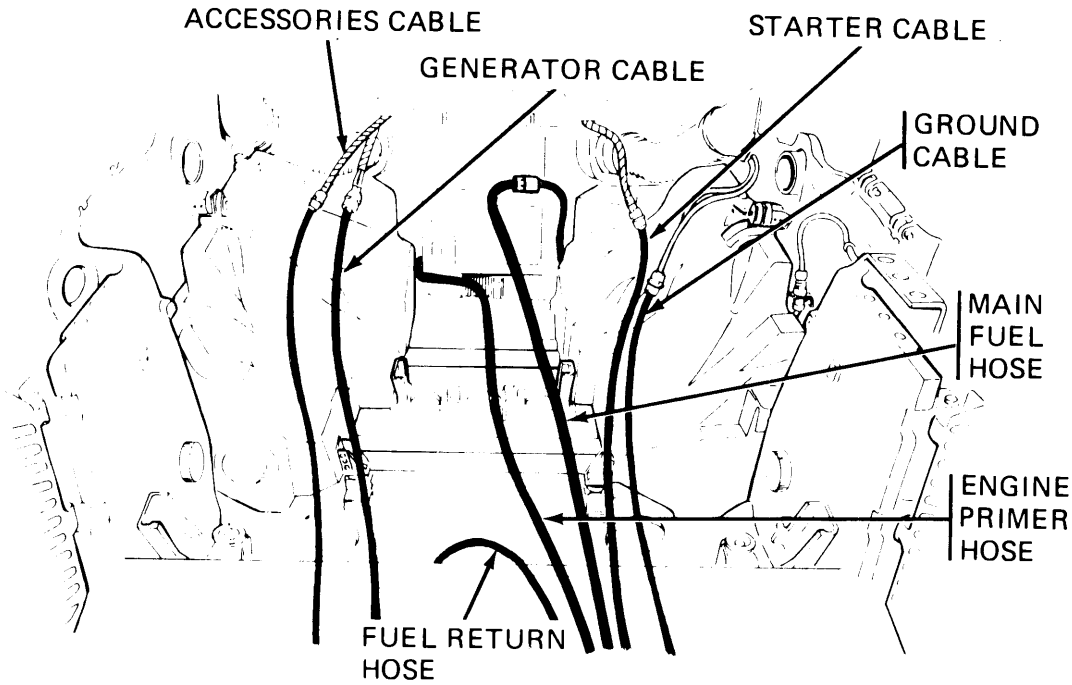

5. Using 7/16-inch socket and ratchet, loosen clamp nut securing clamp.

6. Remove air cleaner hose assembly from turbosupercharger elbow.

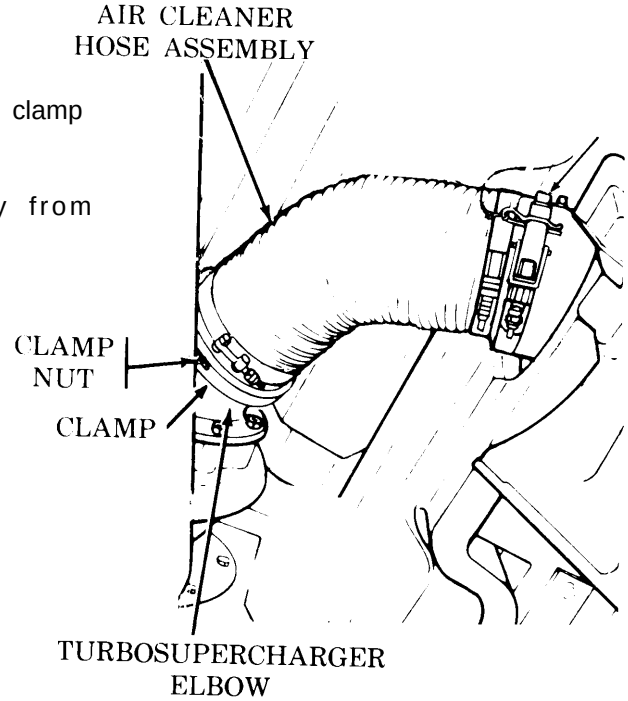

Go on to Sheet 5

POWERPLANT TESTS (GROUND HOP) (Sheet 5 of 16)
Test Hookup (Sheet 3 of 3)

7. Position ground hop hose assembly with clamp and filter to turbosupercharger elbow (left and right).

8. Using 7/16-inch socket and ratchet, tighten clamp nut to secure hose assembly to turbosupercharger elbow.

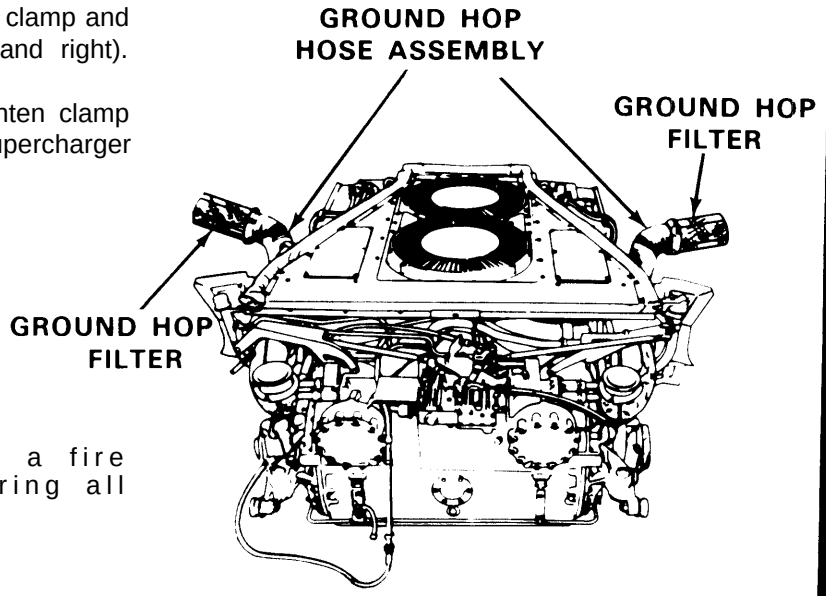

WARNING

Assign one crewmember with a fire extinguisher as a fire guard during all powerplant tests.

NOTE

During these tests, the electrical instruments, switches and warning lights in the vehicle will be operative. All mechanical and hydraulic controls and vehicle tachometer will be inoperative. It will be necessary to manually position or actuate the throttle or shifting control and fuel shut off.

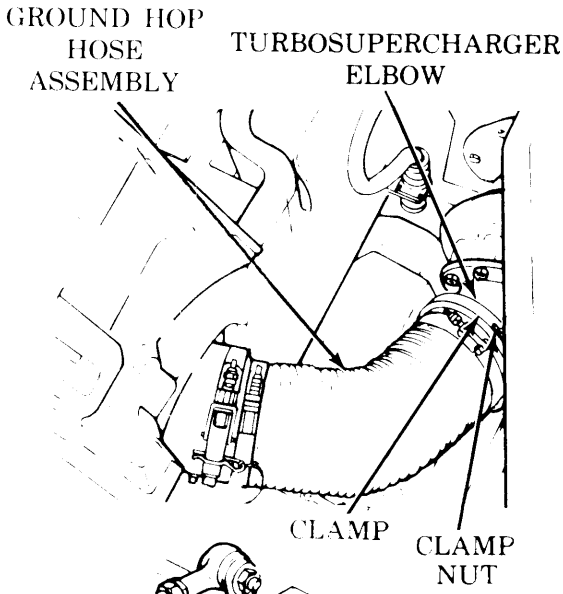

9. Install fabricated tachometer assembly.

10. Connect battery ground straps (page 10-268).

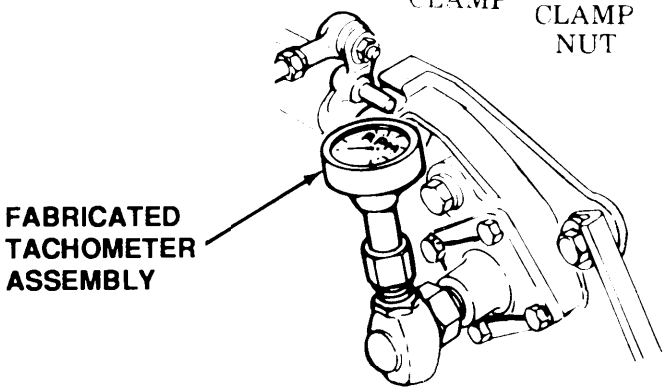

Go on to Sheet 6

TA247986

POWERPLANT TESTS (GROUND HOP) (Sheet 6 of 16)
Idle Test (Sheet 1 of 1)

WARNING

Take all necessary safety precautions to eliminate possible injury to personnel or damage to equipment. Stand clear of transmission output flanges whenever the engine is running.

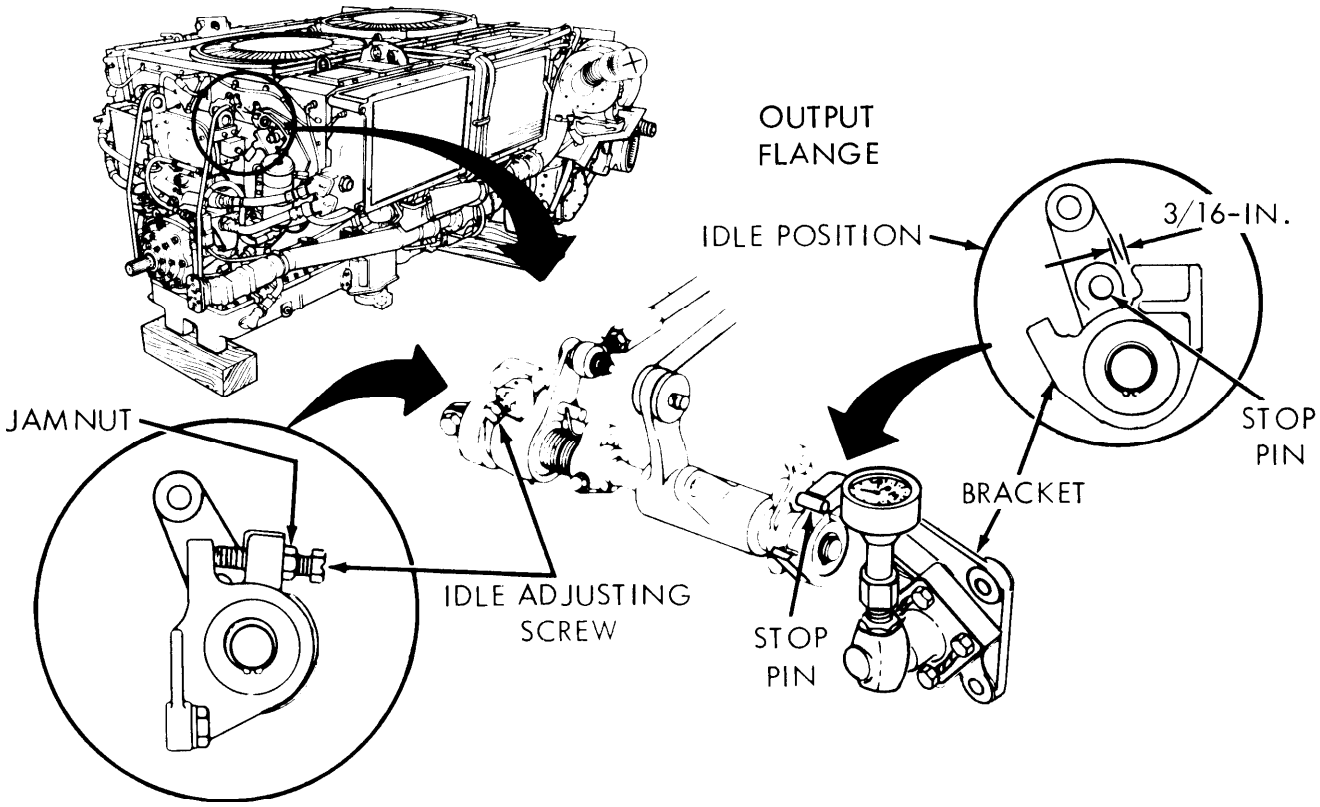

1. Start and operate engine until normal operating temperatures are reached (TM 5-5420-202-10).

2. Check tachometer for indication of 700-750 rpm. If indication is not within range, adjust idle adjusting screw according to steps 3 through 6.

3. Using 1/2 inch wrench, loosen jamnut on idle adjusting screw.

4. Using 1/2 inch wrench, adjust idle adjusting screw until 700-750 rpm shows on tachometer.

5. Using 1/2 inch wrench, tighten jamnut.

6. Install 3/16 inch end of throttle linkage adjusting gage between stop pin and bracket shoulder. If distance is not a minimum of 3/16 inch, notify support maintenance.

7. Check tachometer. If indication is not between 700-750 rpm, notify maintenance supervisor.

TA247987

Go on to Sheet 7

POWERPLANT TESTS (GROUND HOP) (Sheet 7 of 16)
Governed No-Load Test (Sheet 1 of 2)

1. Start and operate engine until normal operating temperatures are reached (TM 5-5420-202-10).

WARNING

Take all necessary safety precautions to eliminate possible injury to personnel or damage to equipment. Stand clear of transmission output flanges whenever the engine is running.

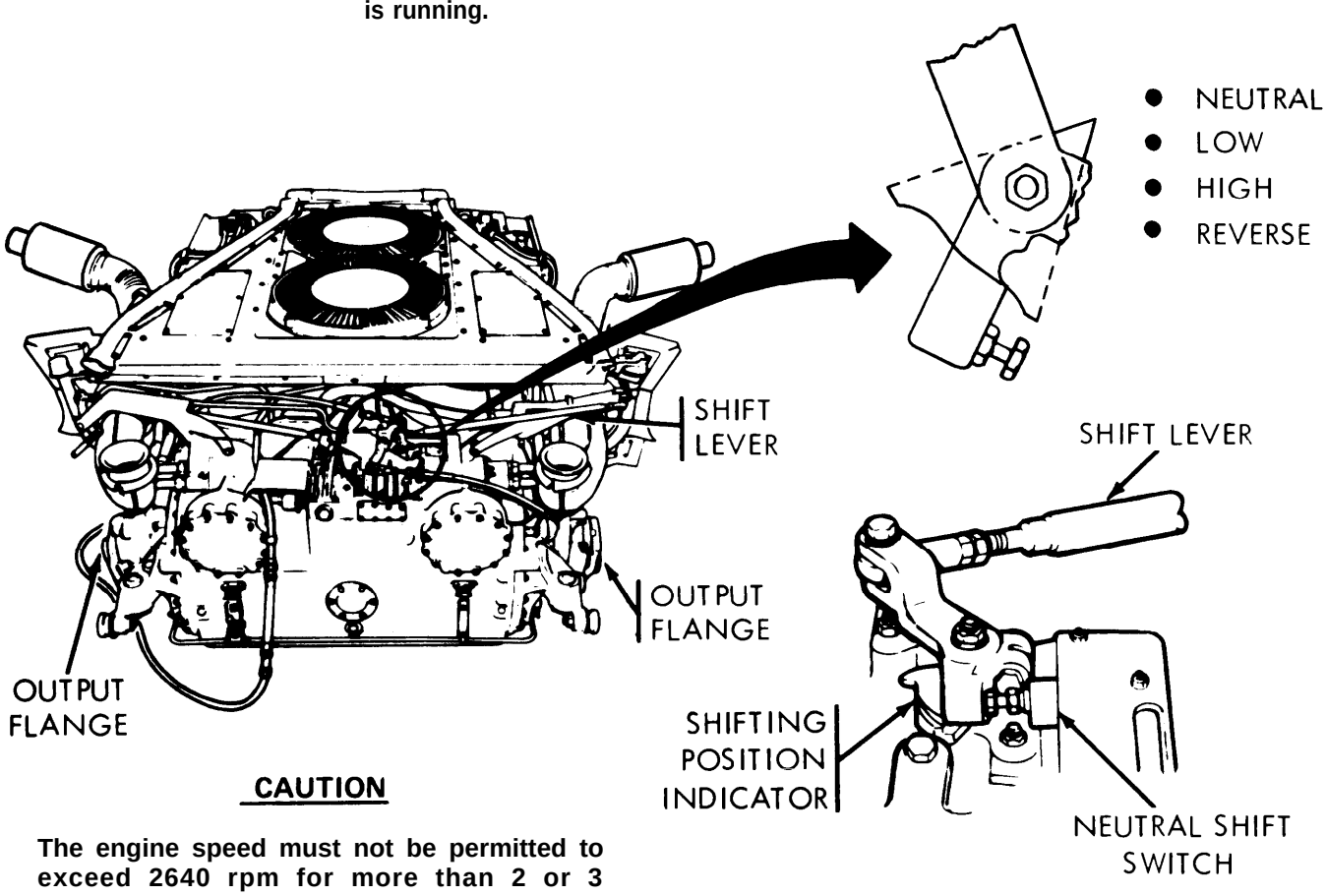

CAUTION

The engine speed must not be permitted to exceed 2640 rpm for more than 2 or 3 seconds in the event of governor malfunction.

NOTE

An indicator on the linkage shaft and four dots on the body transmission valve casting indicate shift position.

2. Be sure transmission is in neutral position by checking shifting position indicator. If not in neutral position, grasp shift lever and pull or push lever to set indicator to desired position.

TA247988

Go on to Sheet 8

POWERPLANT TESTS (GROUND HOP) (Sheet 8 of 16)
Governed No-Load Test (Sheet 2 of 2)

3. Manually and gradually actuate throttle by pulling forward on throttle lever to full open position.

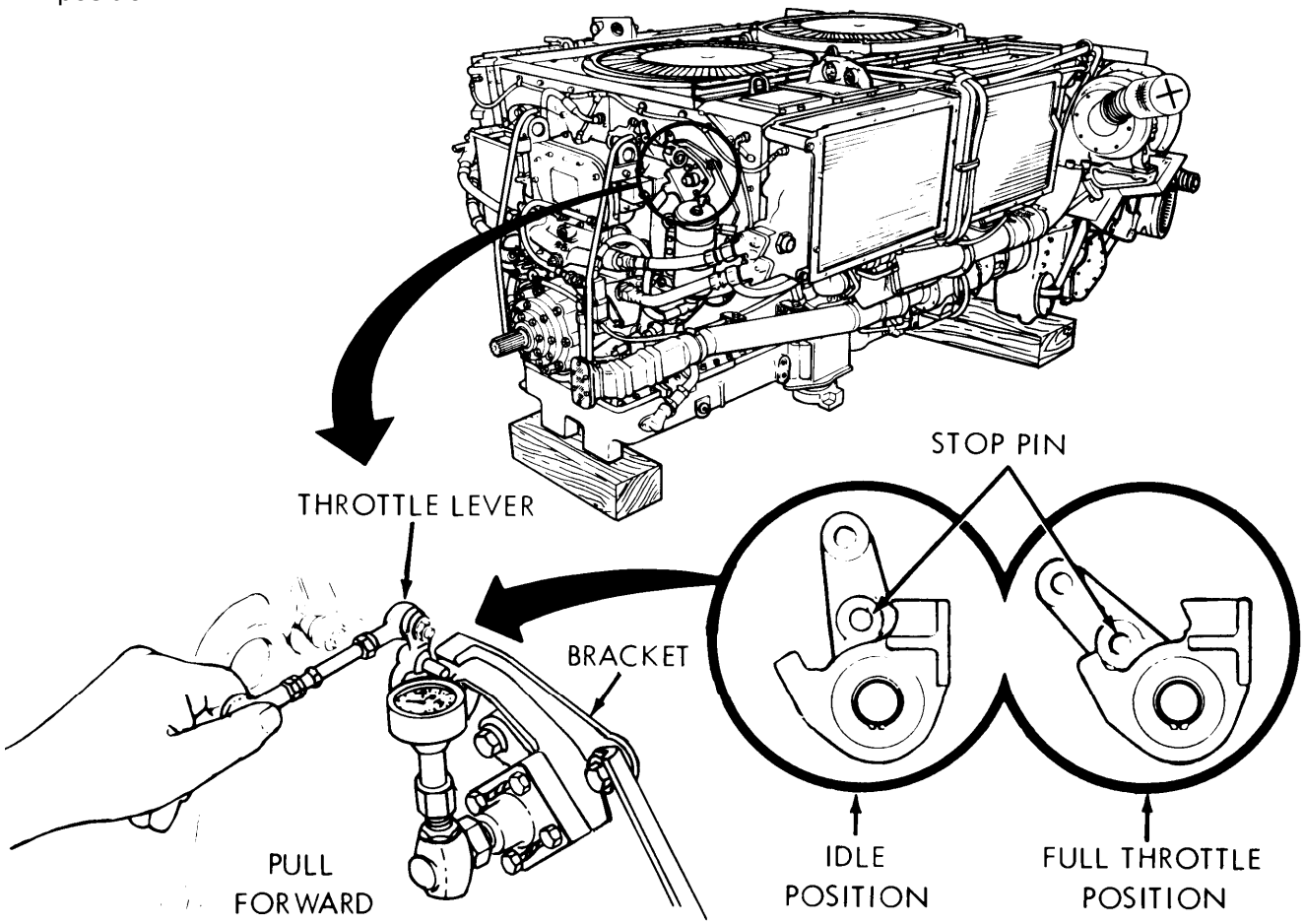

4. Watch tachometer. In most cases, engine speed will surge over 2600 rpm and then stabilize within 30 seconds between 2550 and 2640 rpm. If rpm does not fall within this range, or keeps changing, notify support maintenance.

5. Gradually release throttle lever allowing engine to return to idle speed (700-750 rpm).

Go on to Sheet 9

TA247989

POWERPLANT TESTS (GROUND HOP) (Sheet 9 of 16)
Stall Test (Sheet 1 of 5)

NOTE

Before performing stall test, check brake adjustment (page 13-78).

1. **Remove right brake slave cylinder (page 13-58).**
2. **Remove left brake slave cylinder (page 13-54).**
3. **Position brake applicator tool over rod sticking out of brake housing (where slave cylinder was).**
4. **Engage catch on tool into notch in brake housing.**

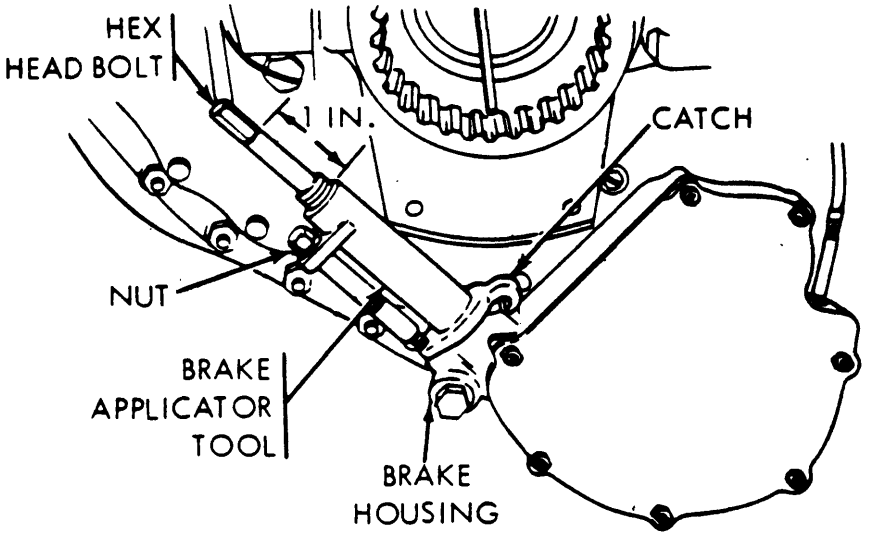

5. Using 9/16 inch wrench, tighten nut to secure brake applicator tool to brake housing.
6. Using 3/4 inch wrench, tighten nut to secure brake applicator tool to brake housing.
7. Using 3/4 inch wrench, set brake by rotating hex head bolt until bottom of bolt is approximately 1 inch from top of tube.

Go on to Sheet 10

POWERPLANT TESTS (GROUND HOP) (Sheet 10 of 16)
Stall Test (Sheet 2 of 5)

8. Check oil levels in engine and transmission (LO 5-5420-202-12). Make sure levels are up to full range on level gages.

WARNING

Take all necessary safety precautions to eliminate possible injury to personnel or damage to equipment. Stand clear of transmission output flanges whenever the engine is running. Personnel must wear hearing protection.

9. Start and operate engine until normal operating temperatures are reached (TM 5-5420-202-10).

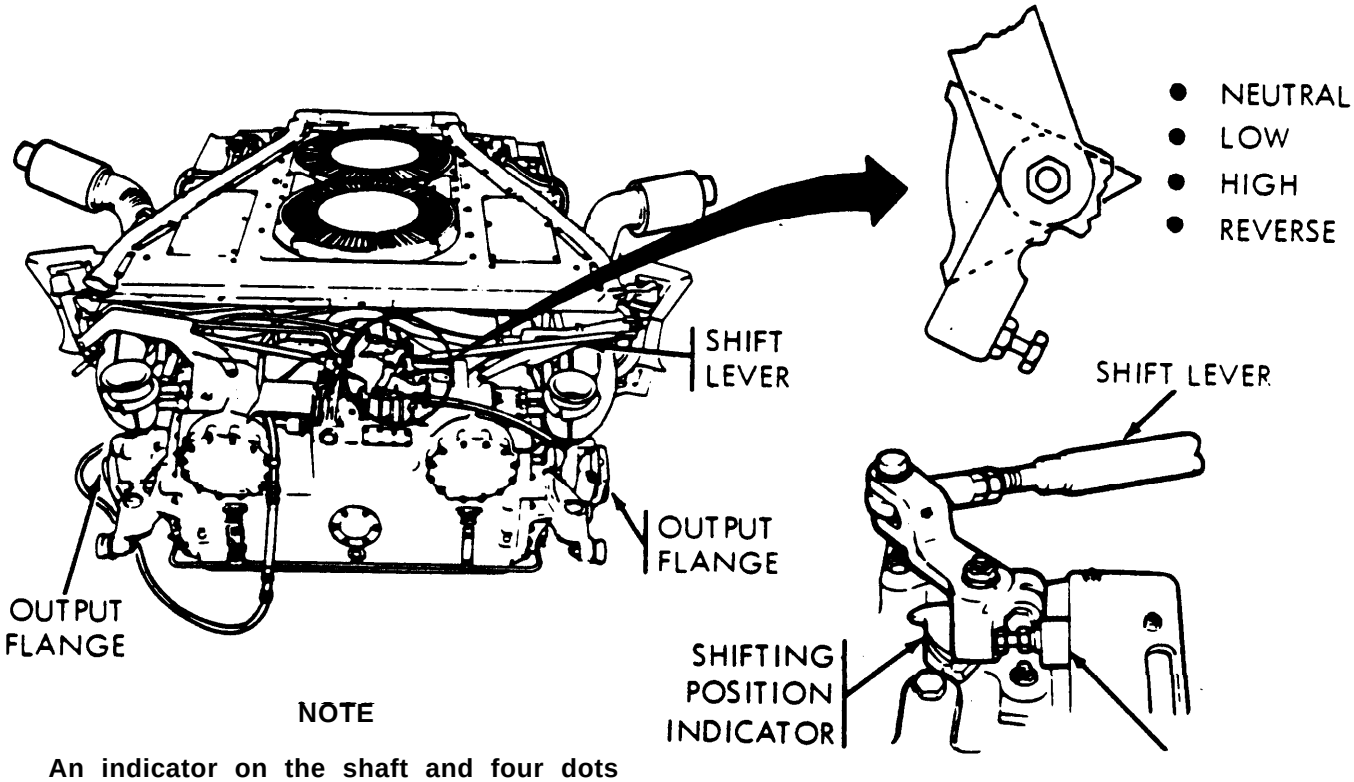

NOTE

An indicator on the shaft and four dots on the body transmission valve casting indicate shift position.

10. Set transmission in high range by grasping shift lever and pull or push lever to set indicator to high range.

Go on to Sheet 11

TA247991

POWERPLANT TESTS (GROUND HOP) (Sheet 11 of 16)
Stall Test (Sheet 3 of 5)

11. Manually and gradually actuate throttle by pulling forward on throttle lever to full open position.

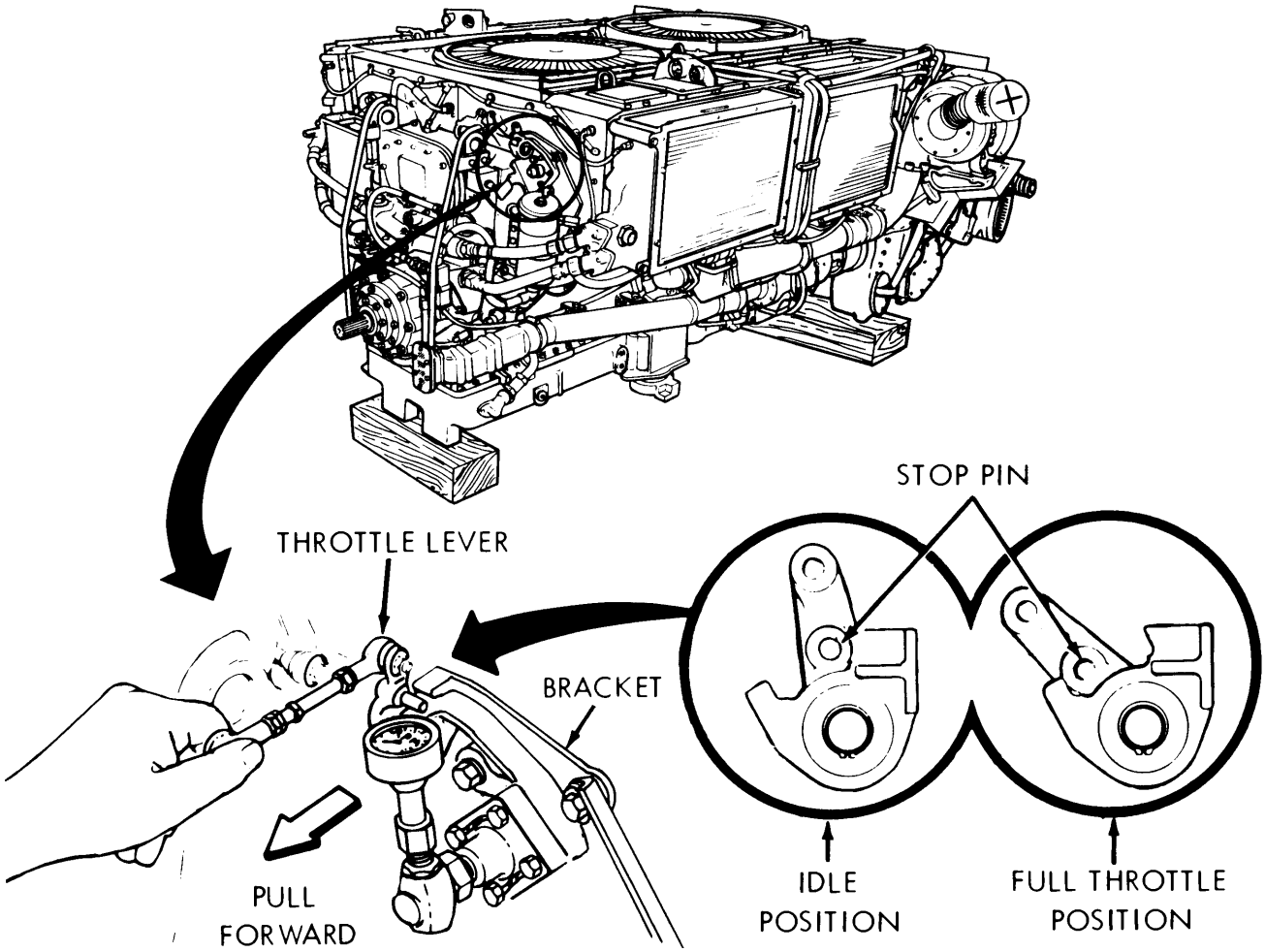

CAUTION

Do not stall test for more than 30 seconds at full throttle or allow transmission oil temperature to go into red area on transmission oil temperature indicator.

12. Note tachometer reading while operating engine at full throttle for no more than 30 seconds. Return throttle lever to idle position (700-750 rpm).

13. Repeat steps 11 and 12, two more times. If engine speed is below 1800 rpm after three checks, engine is not operating properly. Notify support maintenance.

TA247992

Go on to Sheet 12

POWERPLANT TESTS (GROUND HOP) (Sheet 12 of 16)
Stall Test (Sheet 4 of 5)

14. If engine speed is over 2050 rpm, there is clutch slippage in transmission. Verify that shift control lever is in high (check control indicator position). Notify support maintenance.

NOTE

This test may also be used to determine if the low-range or reverse-range transmission servobands are slipping.

15. Set transmission in low or reverse range by grasping shift control lever and pull or push lever to set indicator to selected range.

CAUTION

Do not stall test for more than 30 seconds at full throttle or allow transmission oil temperature to go into red area on transmission oil temperature indicator..

16. Watch tachometer and operate engine at full throttle for no more than 30 seconds, three times.

17. If engine speed is below 1800 rpm after three checks, engine is not operating properly. Notify support maintenance.

18. If engine speed exceeds 2050 rpm, servobands are slipping. Verify that shift control lever is in selected range (check position of control indicator) and adjust forward or reverse servobands (page 11-83).

Go on to Sheet 13

POWERPLANT TESTS (GROUND HOP) (Sheet 13 of 16)
Stall Test (Sheet 5 of 5)

19. After adjusting servobands, repeat steps 15 through 18. If slippage still existes, notify support maintenance.

20. When tests are completed, shut down engine (TM 5-5420-202-10).

21. Using 3/4 inch wrench, back off hex head bolt to release brake.

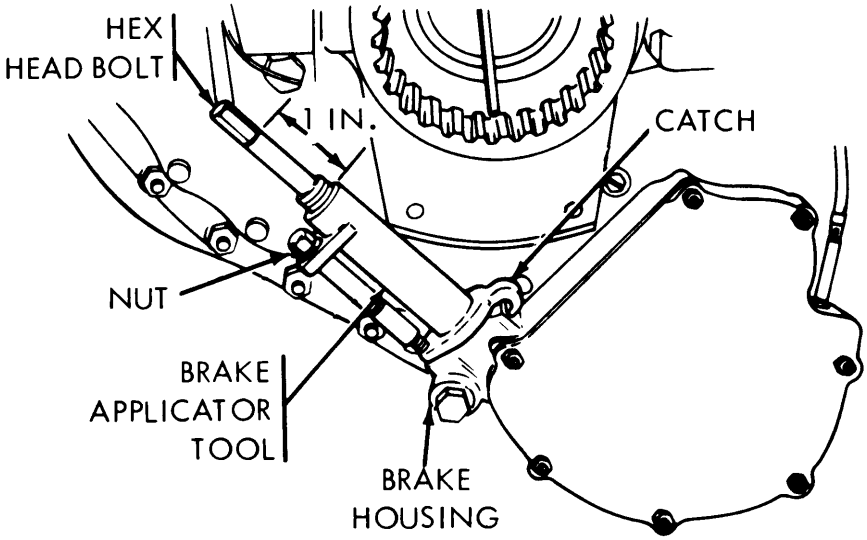

22. Using 9/16 inch wrench, back off nut to release brake applicator tool from brake housing.

23. Remove brake applicator tool from brake housing.

24. Install right brake slave cylinder (page 13-61).

25. Install left brake slave cylinder (page 13-56).

TA247993

Go on to Sheet 14

POWERPLANT TESTS (GROUND HOP) (Sheet 14 of 16)
Engine Fuel Leak Checks (Sheet 1 of 2)

1. Remove engine shroud (page 9-30).
2. Remove right bank engine access covers (page 6-107).
3. Remove left bank engine access covers (page 6-112).
4. Remove cooling fans (page 9-55).
5. Install one spacer onto each of two fan drive shafts.
6. Using socket, install but do not tighten cooling fan nut.
7. Using torque wrench and socket, tighten cooling fan nut 45-55 lb ft (61-75 NŽm).

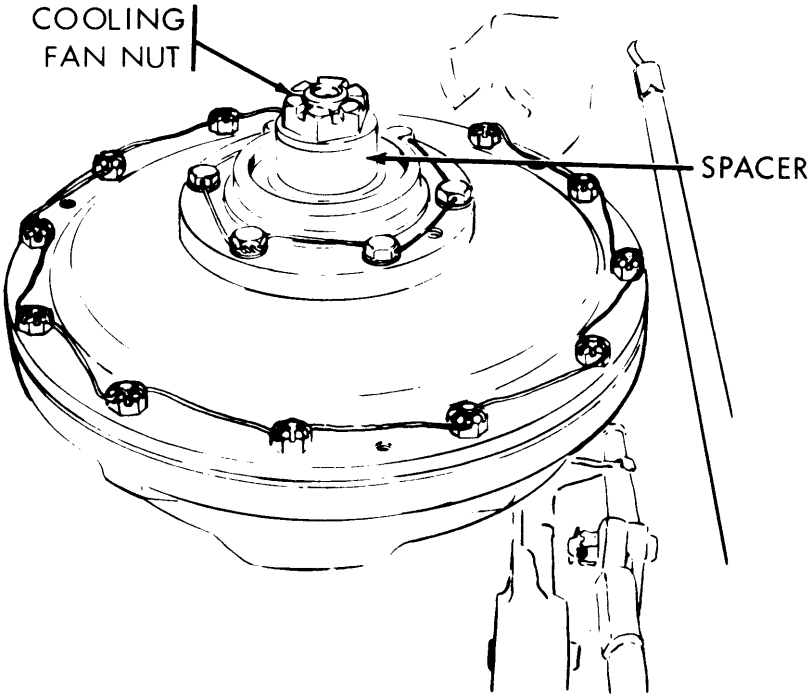

Go on to Sheet 15

TA247994

POWERPLANT TESTS (GROUND HOP) (Sheet 15 of 16)
Engine Fuel Leak Checks (Sheet 2 of 2)

WARNING

Observe for leakage from a safe distance. Fuel is delivered under high pressure from fuel pump to injector nozzles. Injury to personnel could result if contacted by spray from loose or defective fuel line.

CAUTION

DO NOT run engine for more than 10 minutes and do not exceed 700-750 rpm.

8. Start engine and run engine at idle speed (700-750 rpm) (TM 5-5420-202-10).
9. Check for leakage at all fuel line connections.
10. If leak is observed, shut down engine (TM 5-5420-202-10) and make necessary repairs.
11. When no leaks are observed, shut down engine (TM 5-5420-202-10).
12. Using socket, remove cooling fan nut.
13. Remove spacers from fan drive shafts.
14. Install cooling fans (page 9-57).
15. Install left bank engine access covers (page 6-115).
16. Install right bank engine access covers (page 6-110).
17. Install engine shroud (page 9-31).

Go on to Sheet 16

POWERPLANT TESTS (GROUND HOP) (Sheet 16 of 16)
After Test Disconnect (Sheet 1 of 1)

1. Disconnect three battery ground cables (page 10-268).
2. Disconnect four electrical cable assemblies and three hose assemblies from powerplant and hull (page 5-27).
3. Remove fabricated tachometer assembly.
4. Using socket, loosen clamp nuts that secure left and right ground hop hose assemblies.
5. Remove ground hop hose assemblies with clamp and filters from turbosupercharger elbow.
6. Position air cleaner hose assembly with clamp to turbosupercharger elbow.
7. Using 7/16-inch socket with ratchet, tighten clamp nut to secure air cleaner hose assembly to turbosupercharger elbow.
8. Install powerplant (page 5-14).

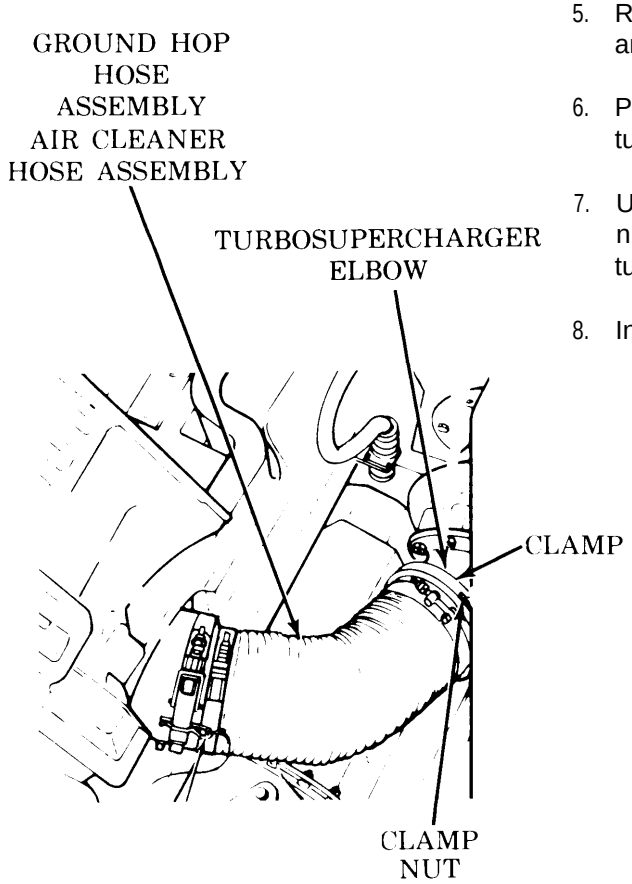

End of Task

TA247995

CHAPTER 6

ENGINE MAINTENANCE

INDEX

Procedure	Page
Rear Powerplant Guide (Left or Right) Replacement	6-2
Front Powerplant Guide (Left or Right) Replacement	6-4
Engine Mounts (Left and Right) Replacement	6-5
Transmission Mounts (Left and Right) Replacement	6-8
Drain Engine Oil	6-12
Thermostatic Engine Oil Cooler Valve Assembly (Left or Right) Replacement	6-15
Engine Oil Cooler (Left and Right) Replacement	6-19
Thermostatic Transmission Oil Cooler Valve Assembly (Left Side) Test and Replacement.	6-25
Thermostatic Transmission Oil Cooler Valve Assembly (Right Side) Test and Replacement	6-32
Transmission Oil Cooler Replacement	6-38
Oil Coolers-Cleaning	6-48
Engine Oil Cooler Screen Replacement.	6-51
Transmission Oil Cooler Screen Replacement	6-53
Engine Oil Cooler Bypass Valve Assembly Replacement	6-55
Engine Oil Cooler Fluid Pump Connector Replacement	6-57
Oil Cooler Vent Hoses and Fittings Replacement	6-61
Right Outer and Inner Engine to Transmission Oil Line Tube Assemblies Replacement	6-64
Left Outer and Inner Engine to Transmission Oil Line Tube Assemblies Replacement	6-68
Oil Damper Housing Straight Tube Hose Adapter Replacement	6-72
Engine Oil Filter Element Replacement	6-76
Engine Oil Filler Cap Replacement	6-81
Upper Oil Filler Tube Replacement	6-84
Lower Oil Filler Tube and Hose Replacement	6-88
Turbosupercharger Oil Drain Tube (Right Bank) Replacement	6-90
Turbosupercharger Oil Drain Tube (Left Bank) Replacement	6-94
Crankcase Breather Tee and Rear Tube Replacement	6-97
Multiple Fluid Pressure Line Connector Replacement	6-101
Engine Access Covers (Right Bank) Replacement	6-107
Engine Access Covers (Left Bank) Replacement	6-112
Powerplant Right Bank Oil Cooler Frame and Brackets Replacement	6-117
Powerplant Left Bank Oil Cooler Frame and Brackets Replacement	6-126
Cylinder Head and Oil Pan Drain Tubes (Left and Right) Replacement	6-135

REAR POWERPLANT GUIDE (LEFT OR RIGHT) REPLACEMENT (Sheet 1 of 2)

TOOLS: 9/16 in. combination box and open end wrench
Ball peen hammer
Long round nose pliers
Slip joint pliers
Chisel
Brass drift

SUPPLIES: Connecting ring
Sleeve bearing
Wood block, 4 x 6 (approximately)

REFERENCE: TM 9-237

PRELIMINARY PROCEDURE: Remove powerplant (page 5-2)

REMOVAL:

1. Using wrench, remove screw (A), lockwasher (B), and flat washer (C) securing rear powerplant guide assembly (D) to support (E).

2. Using hammer, tap guide assembly (D) from mounting place. Remove guide assembly from vehicle.

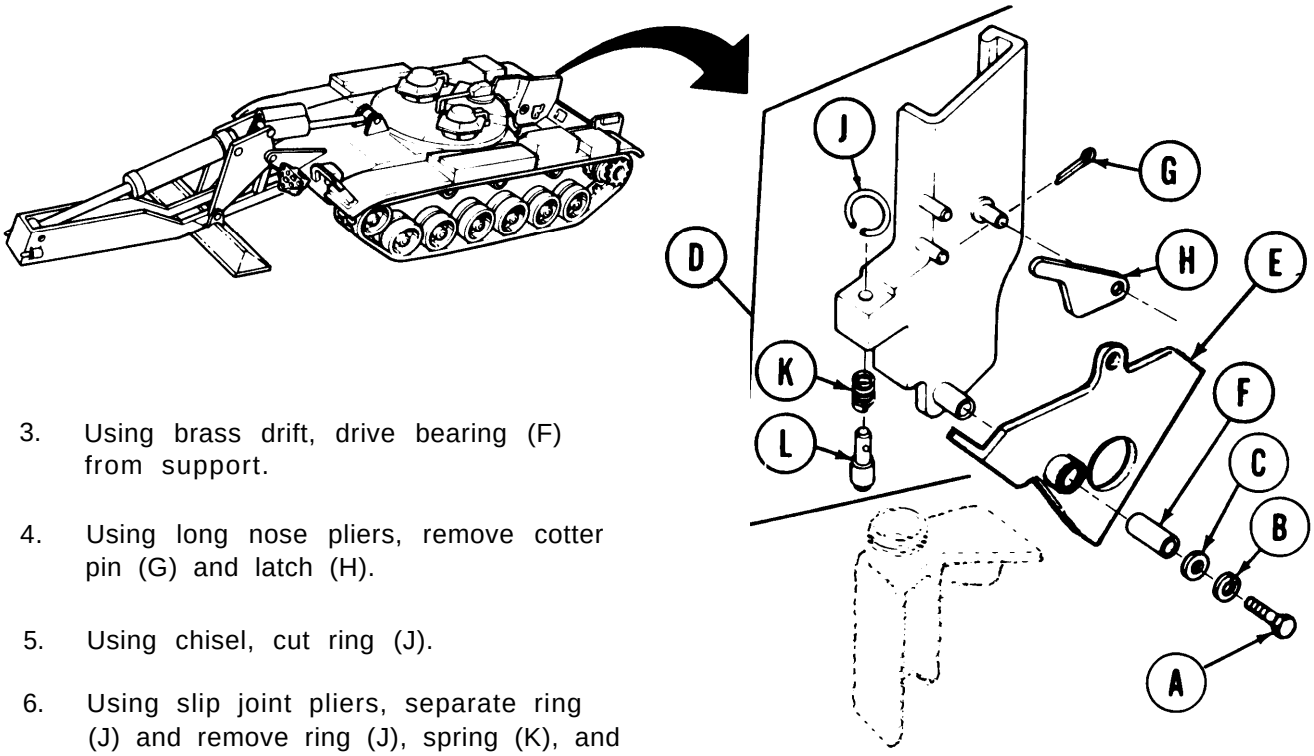

3. Using brass drift, drive bearing (F) from support.

4. Using long nose pliers, remove cotter pin (G) and latch (H).

5. Using chisel, cut ring (J).

6. Using slip joint pliers, separate ring (J) and remove ring (J), spring (K), and pin (L).

Go on to Sheet 2

TA247996

REAR POWERPLANT GUIDE (LEFT OR RIGHT) REPLACEMENT (Sheet 2 of 2)

INSTALLATION:

1. Place pin (A) and spring (B) in position.
2. Using slip joint pliers, install new ring (C).
3. Place latch (D) on guide (E).
4. Using long nose pliers, install cotter pin (F).
5. Using hammer and wood block, install new bearing (G) in mounting hole (H).
6. Mount guide (E) with arm (J) through support mounting hole (H).

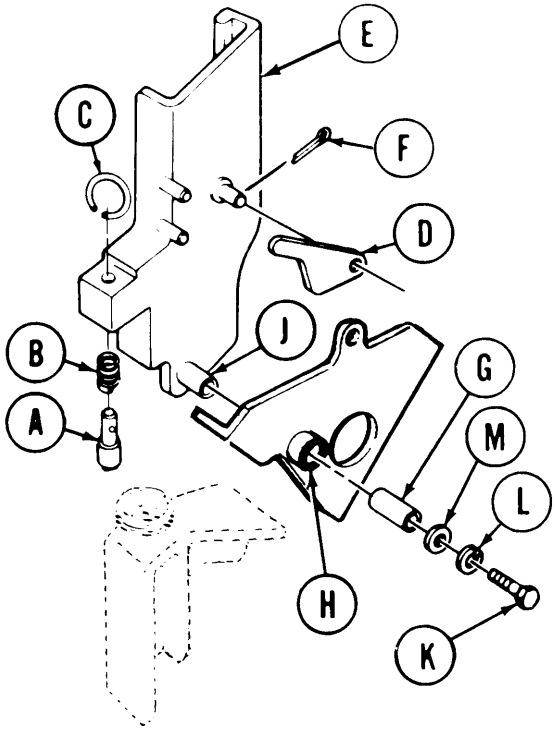

7. Using wrench install screw (K), lockwasher (L), and flat washer (M).
8. Have ring (C) brazed at ring opening. (TM 9-237).
9. Install powerplant (page 5-14).

End of Task

TA247997

FRONT POWERPLANT GUIDE (LEFT OR RIGHT) REPLACEMENT (Sheet 1 of 1)

TOOLS: 15/16 in. combination box and open end wrench
15/16 in. socket with 3/4 in. drive
Hinged handle with 3/4 in. drive
Torque wrench with 3/4 in. drive (0-600 ft-lb) (0-813 NŽm)

PRELIMINARY PROCEDURE: Remove powerplant (page 5-2)

SPECIAL TOOLS: Torque wrench adapter (Item 35, Chapter 3, Section I)

REMOVAL:

NOTE

Three screws on right guide and two screws on left guide are inaccessible and cannot be loosened or removed using socket. Use wrench to remove screws that cannot be removed using socket.

1. Using socket with hinged handle or wrench, loosen and remove six screws and lockwashers (A).

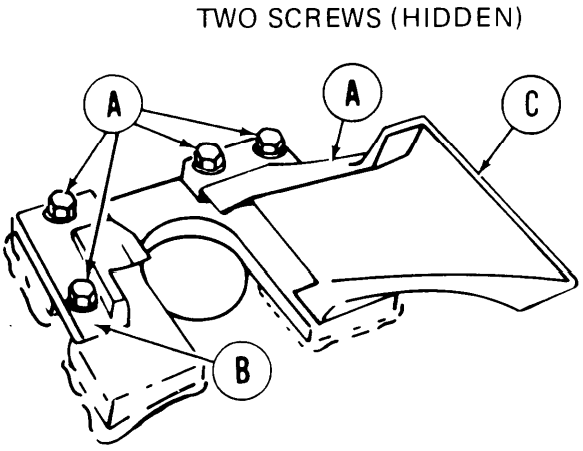

(RIGHT SIDE SHOWN)

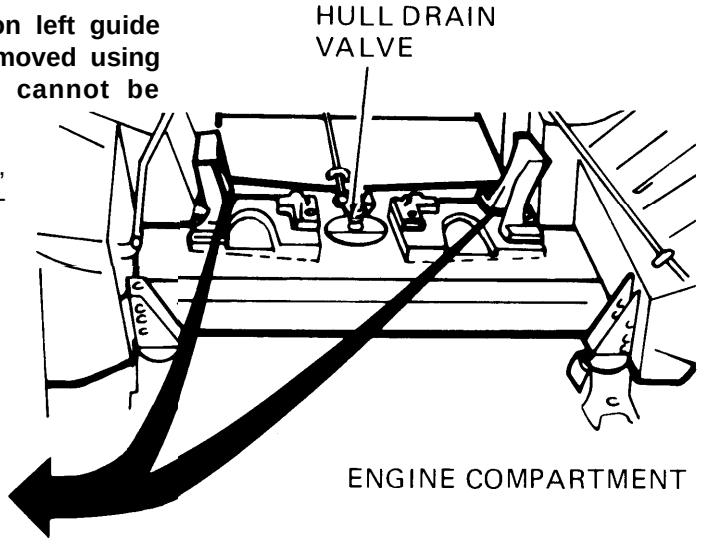

2. Remove inner support (B) and front guide (C).

INSTALLATION:

1. Mount inner support (B) and front guide (C).

2. Install six screws and lockwashers (A).

NOTE

Three screws on right guide and two screws on left guide cannot be torqued. Use wrench to tighten screws that cannot be torqued.

3. Using socket or torque wrench adapter, tighten screws (A) to 155-215 lb-ft (212-286 NŽm).

4. Install powerplant (page 5-14)

End of Task

ENGINE MOUNTS (LEFT AND RIGHT) REPLACEMENT (Sheet 1 of 3)

TOOLS: T-slide handle with 3/4 in. drive (2 required)
36 in. extension (cheater bar)
1-1/8 in. socket with 3/4 in. drive
Ratchet with 3/4 in. drive
1/2 in. socket with 1/2 in. drive
Ratchet with 1/2 in. drive
1-1/8 in. open end wrench
Torque wrench with 3/4 in. drive (0-600 ft-lb) (0-813 NŽm)

SUPPLIES: Dry cleaning solvent (Item 55, Appendix D)
Rags (Item 65, Appendix D)
Gloves (Item 69, Appendix D)
Goggles (Item 70, Appendix D)

PRELIMINARY PROCEDURE: Remove powerplant (page 5-2).

NOTE

Removal and installation of left and right engine mounts are the same.

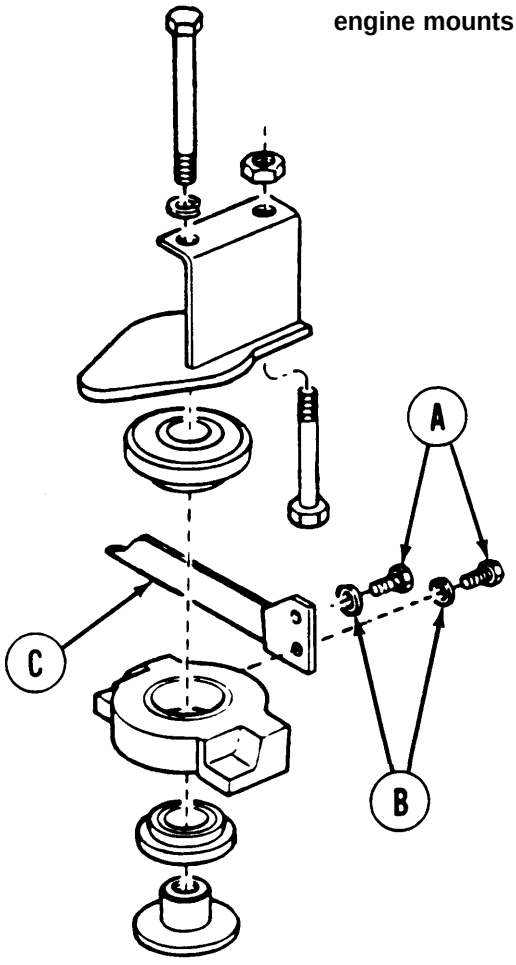

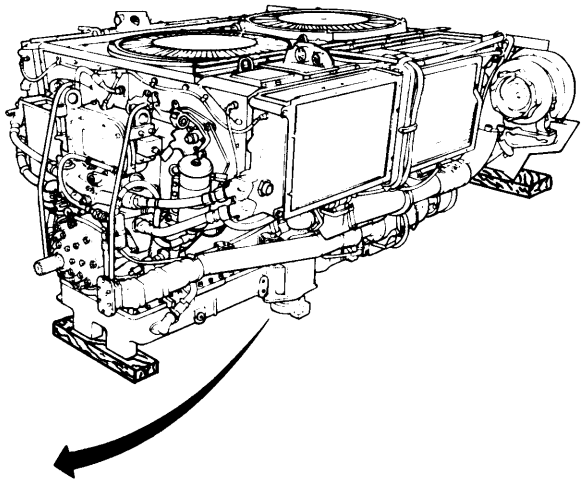

REMOVAL:

1. Using 1/2 inch socket, remove two screws (A) and washers (B) securing bracket (C). Remove bracket (C).

Go on to Sheet 2

TA247999

ENGINE MOUNTS (LEFT AND RIGHT) REPLACEMENT (Sheet 2 of 3)

2. Using 1-1/8 inch open end wrench to hold nut (D) and 1-1/8 inch socket on bolt (E), remove nut (D) and bolt (E) from bracket (F).

3. While holding bushing (G) with 3/4 inch drive T-slide and 36 inch extension bar, use 1-1/8 inch socket to remove bolt (H) and washer (J) from bracket (F).

4. Remove bushing (G), mount (K), mounting (L), and mount (M) from engine assembly.

CLEANING AND INSPECTION:

WARNING

Dry cleaning solvent P-D-680 is toxic and flammable. To prevent personal injury, wear protective goggles and gloves and use only in a well-ventilated area. Avoid contact with skin, eyes, and clothes and don't breathe vapors. Do not use near open flame or excessive heat. The flash point for Type #1 Dry Cleaning Solvent is 100°F (38°C) and for Type #2 is 138°F (50°C). If you become dizzy while using cleaning sovent, get fresh air immediately and get medical aid. If contact with eyes is made, wash your eyes with water and get medical aid immediately.

1. Clean all parts with dry cleaning solvent and wipe dry with clean rag.

2. Inspect bushing, mounts, and mountings for nicks and burrs. Replace damaged parts.

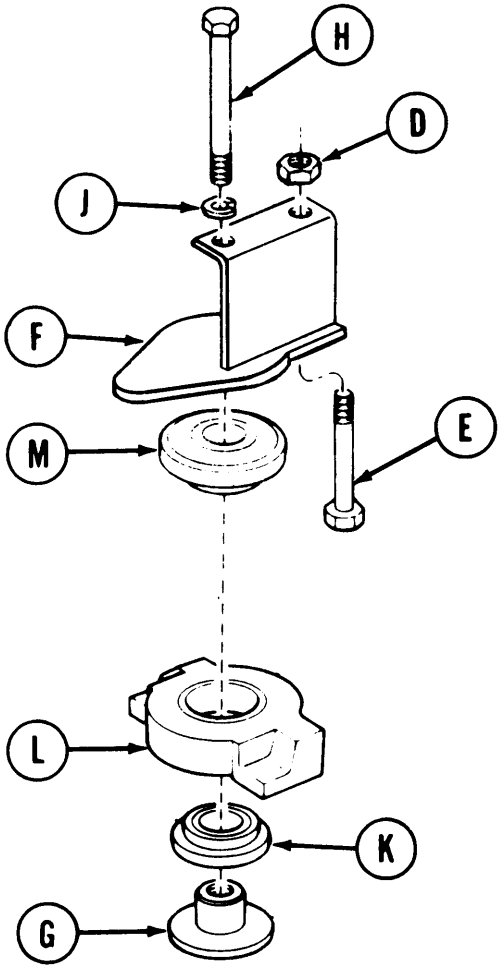

Go on to Sheet 3

TA248000

ENGINE MOUNTS (LEFT AND RIGHT) REPLACEMENT (Sheet 3 of 3)

INSTALLATION:

1. Position bolt (A) through bracket (B) and install nut (C). Using 1-1/8 inch open end wrench to hold nut (C) and 1-1/8 inch socket with 3/4 inch drive ratchet, tighten bolt (A).

2. Install bolt (D) through washer (E), bracket (B), mount (F), mounting (G), mount (H), and into bushing (J). Use 1-1/8 inch socket and 3/4 inch drive ratchet and tighten bolt (D), while holding bushing (J) with 3/4 inch T-slide and 36 inch bar extension.

3. Using 1-1/8 wrench to hold bolt (A) and torque wrench with 1-1/8 inch socket, tighten nut (C) 135 to 140 ft-lb (183 to 190 NŽm).

4. Using 3/4 inch T-slide and 36 inch bar extension to hold bushing (J) and torque wrench with 1-1/8 inch socket, tighten bolt (D) 135 to 140 ft-lb (183 to 190 NŽm).

5. Using 1/2 inch socket and 1/2 inch drive ratchet, install two screws (K) through washers (L) and bracket (M) into mounting (G).

6. Install powerplant (page 5-14).

End of Task

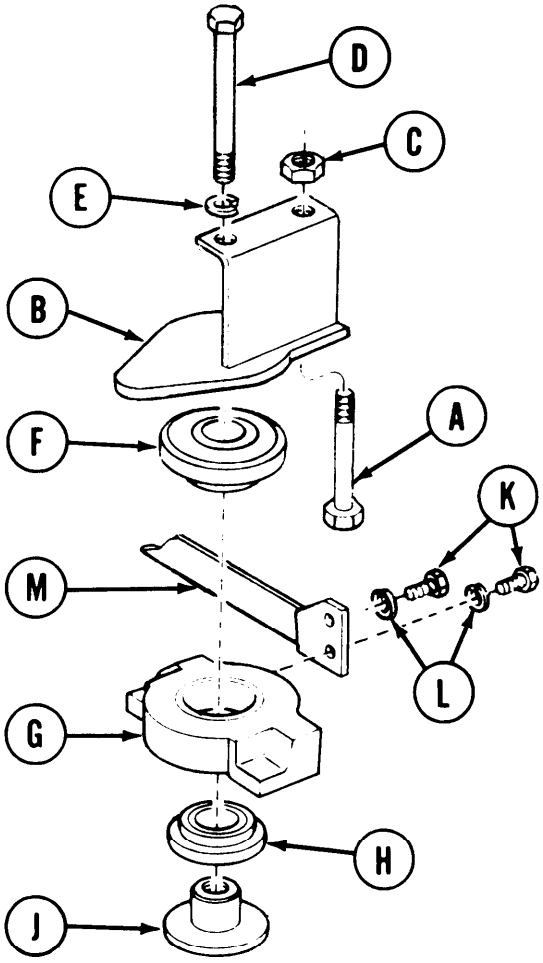

TA248001

TRANSMISSION MOUNTS (LEFT AND RIGHT) REPLACEMENT (Sheet 1 of 4)

PROCEDURE INDEX

PROCEDURE	PAGE
Removal	6-8
Cleaning and Inspection	6-10
Installation	6-10

TOOLS: Hammer
3-1/8 in. socket with 3/4 in. drive
T-slide handle with 3/4 in. drive
Diagonal cutting pliers
4 in. extension with 3/4 in. drive
Slip joint pliers
1-1/2 in. open end wrench
1-1/2 in. socket with 3/4 in. drive
Ratchet with 3/4 in. drive
3/4 in. socket with 1/2 in. drive
Ratchet with 1/2 in. drive
1-1/4 in. open end wrench
Bench vise
Torque wrench with 3/4 in. drive (0-600 lb-ft) (0-813 NŽm)
1/2 in. square drive bit screwdriver
Torque wrench with 1/2 in. drive (0-175 lb-ft) (0-237 NŽm)

SPECIAL TOOLS: Resilient mount mechanical puller (Item 34, Chapter 3, Section 1)

SUPPLIES: Dry cleaning solvent (Item 55, Appendix D)
Lockwire (Item 61, Appendix D)
Rags (Item 65, Appendix D)
Gloves (Item 69, Appendix D)
Goggles (Item 70, Appendix D)

PERSONNEL: Two

PRELIMINARY PROCEDURE: Remove powerplant (page 5-2).

NOTE

The procedure described below applies to both the right and left transmission mounts.

Go on to Sheet 2

TRANSMISSION MOUNTS (LEFT AND RIGHT) REPLACEMENT (Sheet 2 of 4)

REMOVAL:

1. Using diagonal cutting pliers, cut safety wire (A) and remove it from bushing (B) and bracket (C).

2. Using 3-1/8 inch socket and T-slide handle remove bushing (B) from bracket (C).

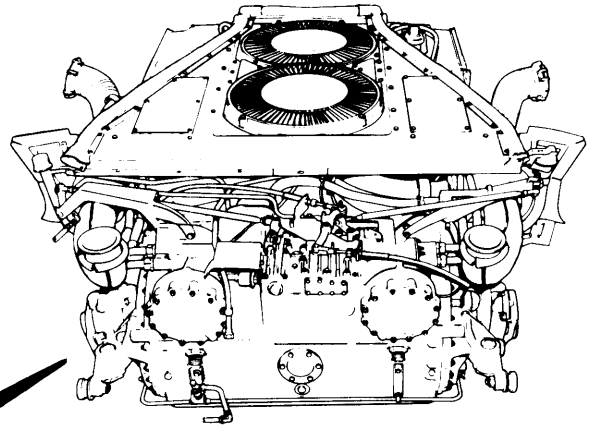

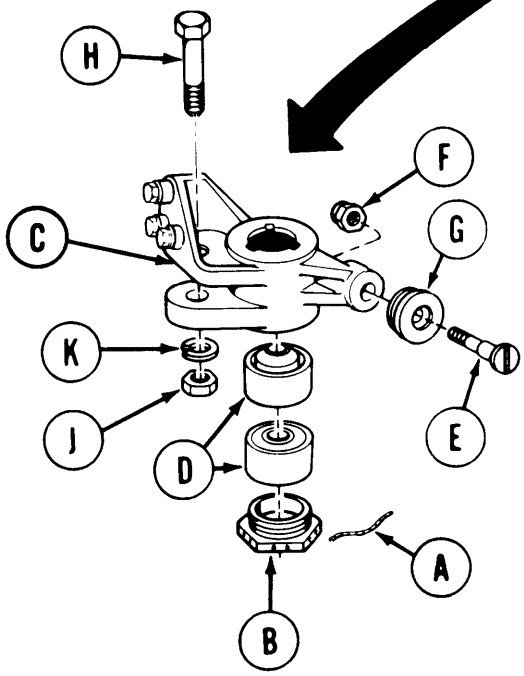

3. Using resilient mount tool assembly, remove two mounts (D) from bracket (c).

4. Using 1/2 inch square drive bit screwdriver and 1/2 inch drive ratchet to hold screw (E), use 1-1/4 inch open end wrench to remove nut (F) from screw (E).

5. Remove screw (E) and roller (G) from bracket (C).

6. With second man using 1-1/2 inch open end wrench to hold bolt (H), use 1-1/2 inch socket and extension to remove nut (J) from bolt (H).

7. Remove washer (K) and bolt (H) from bracket (C).

Go on to Sheet 3

TA248003

TRANSMISSION MOUNTS (LEFT AND RIGHT) REPLACEMENT (Sheet 3 of 4)

NOTE

It may be necessary to turn universal to gain access to screw (L).

8. Using 3/4 inch socket, remove three screws (L) and lockwashers (M) from bracket (C).

9. Remove bracket (C) from transmission.

10. Using hammer, remove spacer (N) from bracket (C).

CLEANING AND INSPECTION:

1. Inspect bushing, mounts, and roller for damages. If any parts are nicked, burred, or out of round, replace damaged part.

WARNING

Dry cleaning solvent P-D-680 is toxic and flammable. To prevent personal injury, wear protective goggles and gloves and use only in a well-ventilated area. Avoid contact with skin, eyes, and clothes and don't breathe vaports. Do not use near open flame or excessive heat. The flash point for Type #l Dry Cleaning Solvent is 100°F (38°C) and for Type #2 is 138°F (50°C). If you become dizzy while using cleaning solvent, get fresh air immediately and get medical aid. If contact with eyes is made, wash your eyes with water and get medical aid immediately.

2. Clean all parts with dry cleaning solvent and wipe dry with rags.

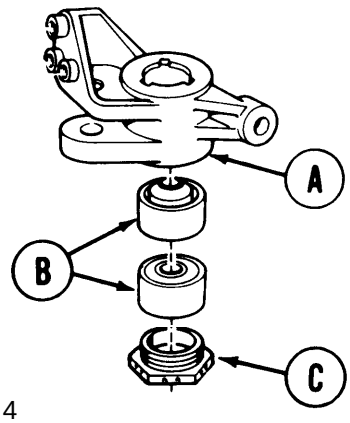

INSTALLATION:

1. Position bracket (A) in vise and using resilient mount tool assembly, install two mounts (B) into bracket (A).

2. Using 3-1/8 inch socket and T-slide handle, install bushing (C) into bracket (A).

Go to Sheet 4

TA248004

TRANSMISSION MOUNTS (LEFT AND RIGHT) REPLACEMENT (Sheet 4 of 4)

3. Using pliers, install safety wire (D) between bushing (C) and bracket (A).

4. Remove from vise and position bracket (A) onto transmission and, using 3/4 inch socket, install three screws (E) and washers (F) through mount on transmission into bracket (A). Leave screws loose.

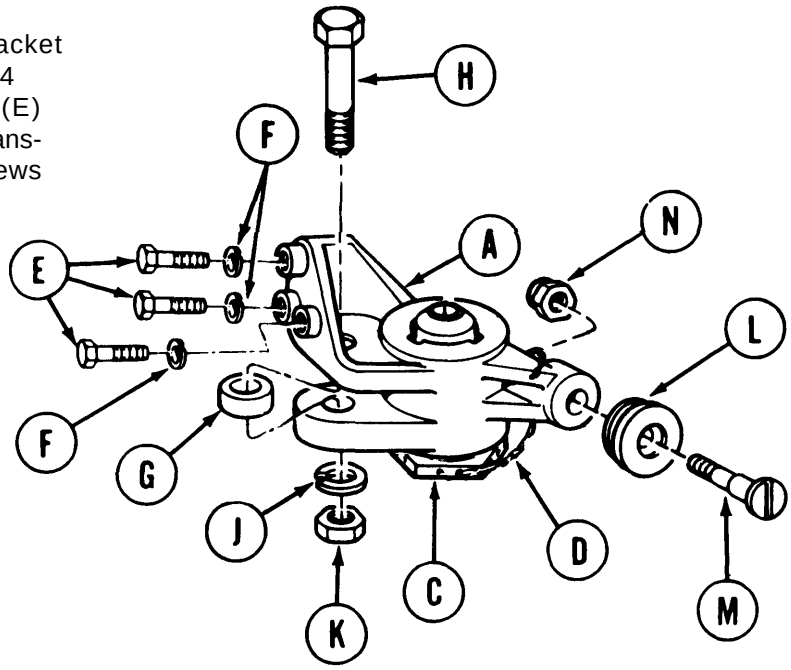

5. Position spacer (G) into bracket (A) and install bolt (H), through spacer (G), mount (A), and washer (J).

6. With second technician using 1-1/2 inch open end wrench to hold bolt (H), use 1-1/2 inch socket and torque wrench to tighten nut (K) to 380 to 415 lb-ft (515-562 NŽm).

7. Position roller (L) onto screw (M) and install screw (M) through bracket (A).

8. Using 1/2 inch square drive bit screwdriver and 1/2 inch drive ratchet to hold screw (M), use 1-1/4 inch open end wrench to install nut (N) onto screw (M).

NOTE

It may be necessary to turn universal to gain access to screw (E).

9. Using torque wrench and 3/4 inch socket, tighten screws (E) to 70-75 lb-ft (95-101 NŽm).

10. Install powerplant (page 5-14).

End of Task

TA248005

DRAIN ENGINE OIL (Sheet 1 of 3)

TOOLS: 3/4 in. socket with 3/8 in. drive
10 in. extension with 1/2 in. drive
Torque wrench with 3/8 in. drive (0-200 lb-in) (0-23 NŽm)
Ratchet with 1/2 in. drive
Flat-tip screwdriver
Putty knife
9/16 in. socket with 1/2 in. drive
3/4 in. socket with 1/2 in. drive

SUPPLIES: Container to catch oil (minimum 20 gal. capacity)
Gasket
Sealing washer
Rags (Item 12, Appendix D)

REFERENCES: LO 5-5420-202-12
TM 5-5420-202-10

PRELIMINARY PROCEDURE: Remove upper engine access cover (page 17-11)

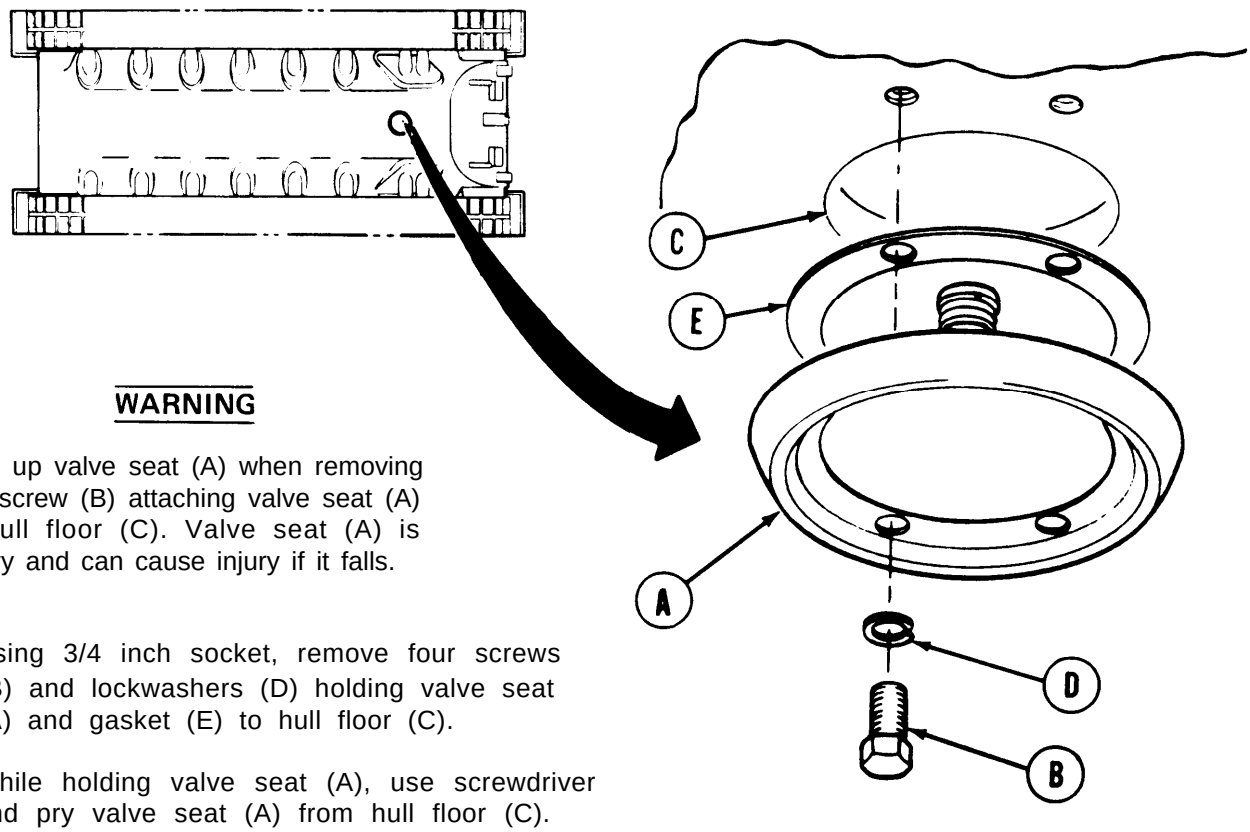

WARNING

Hold up valve seat (A) when removing last screw (B) attaching valve seat (A) to hull floor (C). Valve seat (A) is heavy and can cause injury if it falls.

1. Using 3/4 inch socket, remove four screws (B) and lockwashers (D) holding valve seat (A) and gasket (E) to hull floor (C).

2. While holding valve seat (A), use screwdriver and pry valve seat (A) from hull floor (C).

3. Using putty knife, scrape gasket (E) from hull floor (C) and valve seat (A).

Go on to Sheet 2

TA248006

DRAIN ENGINE OIL (Sheet 2 of 3)

4. Position container under drain valve opening.

5. Using extension, remove oil drain plug (F) from engine oil pan (G).

6. Using 9/16 inch socket with extension, remove vent cap screw (H) and sealing washer (J).

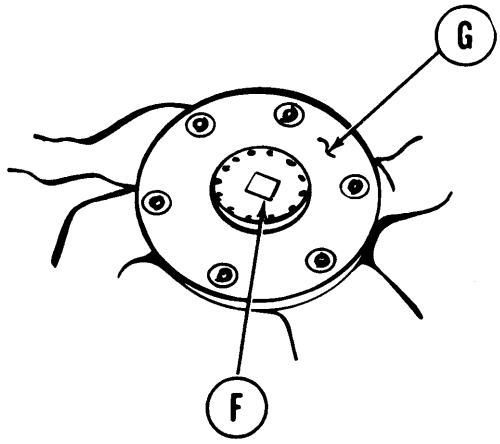

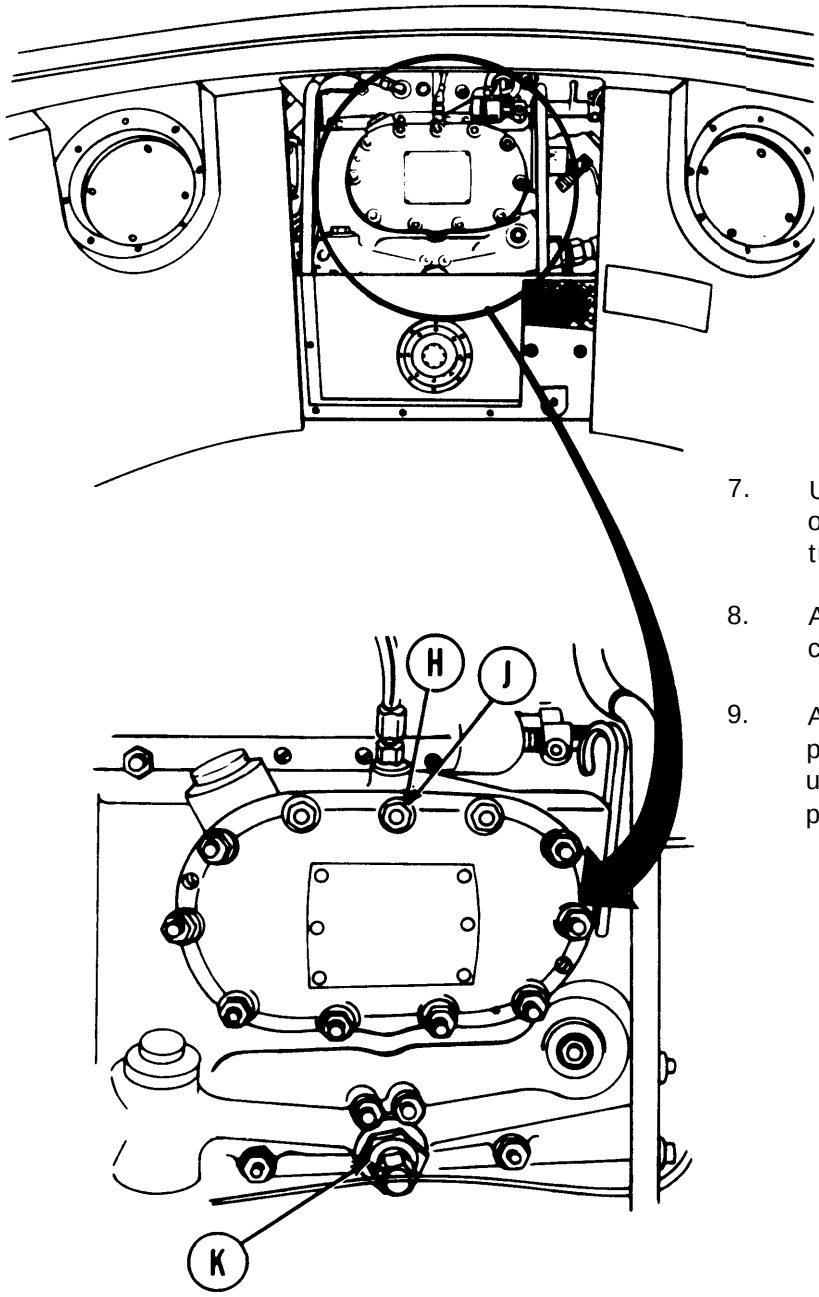

7. Using 3/4 inch socket, loosen oil drain valve (K) six complete turns.

8. Allow engine oil to drain into container.

9. After draining, clean area around drain plug (F) opening with lint-free rags and, using ratchet and extension, install drain plug (F) into engine oil pan (G).

TA248007

DRAIN ENGINE OIL (Sheet 3 of 3)

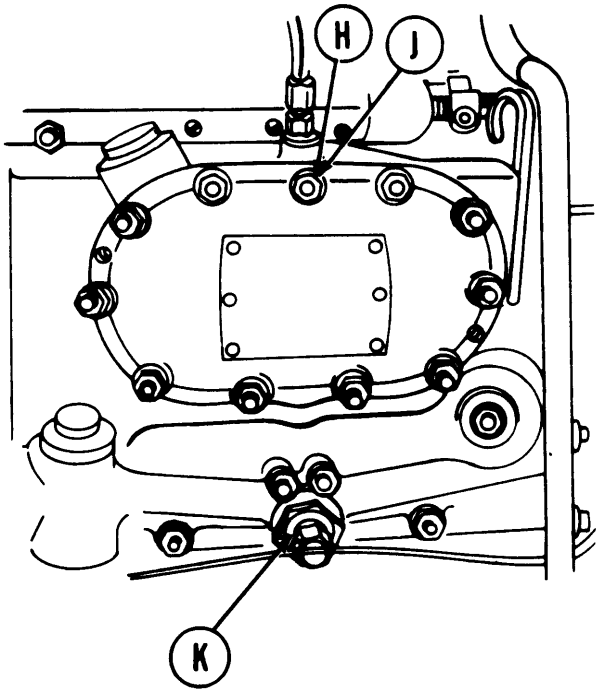

10. Using 3/4 inch socket, tighten oil drain valve (K).

11. Using 9/16 inch socket with extension, install vent cap screw (H) and new sealing washer (J) and tighten.

12. Refill crank case (LO 5-5420-202-12).

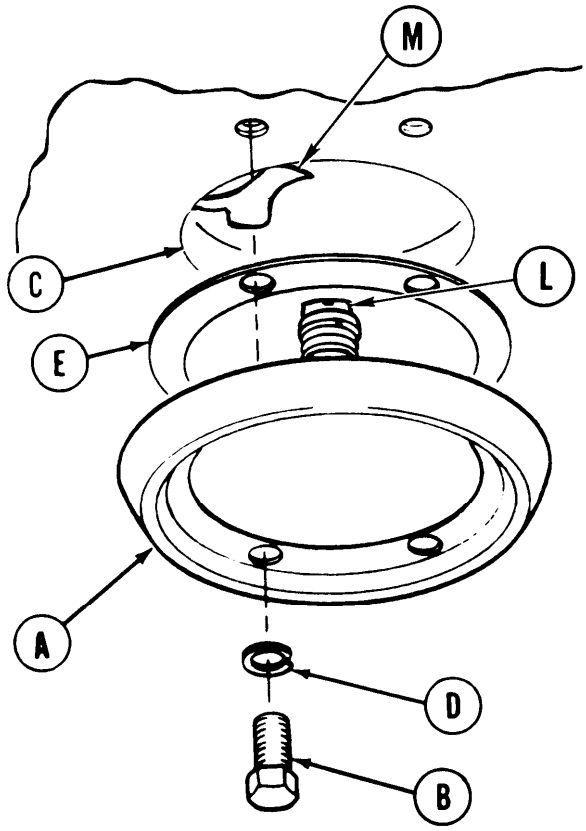

13. Install upper engine access cover (page 17-12).

14. Lineup four holes in valve seat (A), new gasket (E), and hull floor (C).

NOTE

Make sure knob (L) is lined up with lever (M).

15. Using 3/4 inch socket, install four screws (B) and lockwashers (D) holding valve seat (A) and gasket (E) to hull floor (C).

16. Operate rear drain valve (TM 5-5420-202-10) to make sure valve opens and closes smoothly. If valve does not open or close properly, remove, inspect, and install valve assembly again.

End of Task

TA248008

THERMOSTATIC ENGINE OIL COOLER VALVE ASSEMBLY (LEFT AND RIGHT) REPLACEMENT (Sheet 1 of 4)

PROCEDURE INDEX

PROCEDURE	PAGE
Removal	6-15
Inspection	6-16
Test	6-17
Installation	6-18

TOOLS: 1-3/4 in. open end wrench
Ruler
Low-pressure compressed air facility (30 psi max)

SPECIAL TOOLS: Ground hop kit (Item 31, Chapter 3, Section I)

SUPPLIES: Cooking stove (stored in vehicle)
12 in. length of scrap wire
Pencil (Item 71, Appendix D)
Paper (Item 72, Appendix D)
Drip pan
Spacer ring
Container

REFERENCES: LO 5-5420-202-12
TM 5-5420-202-10

PRELIMINARY PROCEDURES: Remove powerplant (page 5-2)
Drain engine oil (page 6-12, steps 4 through 12)
Remove left side engine oil cooler when left thermostat is to be replaced (page 6-19)

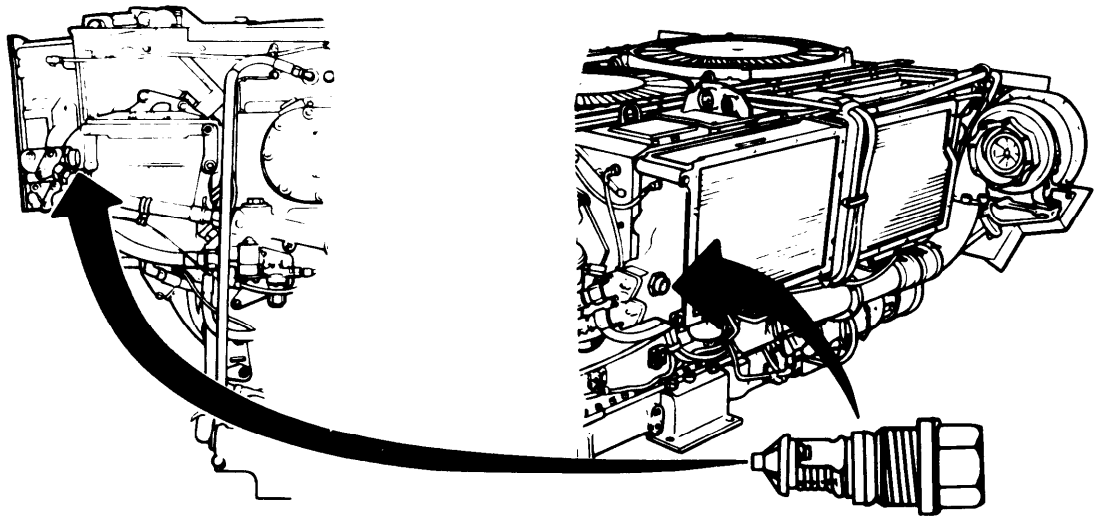

Go on to Sheet 2

TA248009

THERMOSTATIC ENGINE OIL COOLER VALVE ASSEMBLY (LEFT AND RIGHT) REPLACEMENT (Sheet 2 of 4)

REMOVAL:

1. Place drip pan on flat surface under valve and valve socket.

2. Using wrench, loosen valve (A).

3. Remove valve (A) from engine oil cooler.

4. Throw away spacer ring (B).

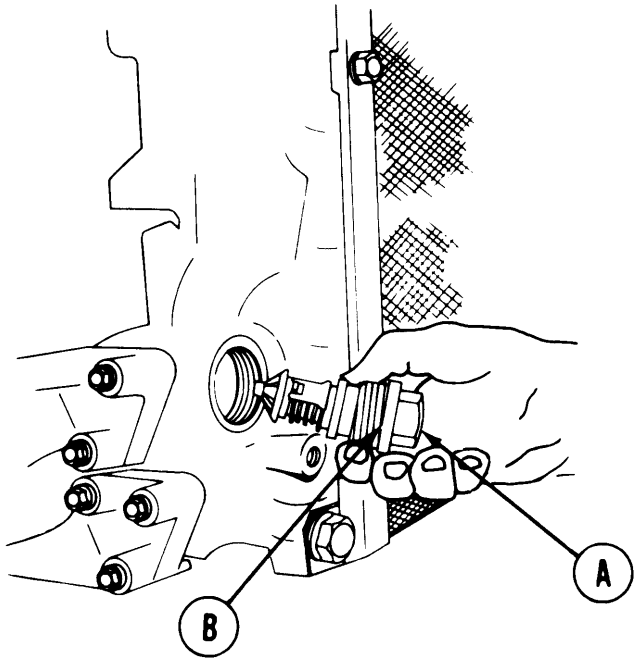

INSPECTION:

1. Inspect valve for stripped or damaged threads.

2. Throw away and replace valve if threads are stripped or damaged.

Go on to Sheet 3

TA248010

THERMOSTATIC ENGINE OIL COOLER VALVE ASSEMBLY (LEFT AND RIGHT) REPLACEMENT (Sheet 3 of 4)

TEST:

1. Using ruler, measure overall length of valve (A) at room temperature.

2. Write down overall length of valve (A).

3. Using wire (B), wrap one end tightly around threads of valve (A).

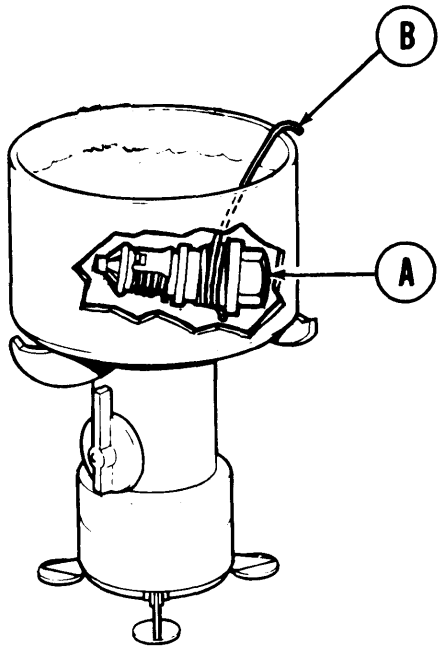

4. Place valve (A) in boiling water. Let free end of wire (B) hang over edge of container.

5. After about 30 seconds, use free end of wire (B) to take valve out of water.

6. Using ruler, immediately measure overall length of valve (A). Record length.

7. Compare length of valve before and after heating. If valve length increased less than 1/4 inch, throw valve away. Get new valve and repeat test. If new valve exceeds 1/4-inch, it may be installed.

WARNING

Compressed air used for cleaning purposes will not exceed 30 psi. Use only with effective chip guarding and personal protective equipment goggles/shield, gloves, etc.

8. Using low-pressure compressed air, dry good valve.

Go on to Sheet 4

TA248011

THERMOSTATIC ENGINE OIL COOLER VALVE ASSEMBLY (LEFT AND RIGHT) REPLACEMENT (Sheet 4 of 4)

INSTALLATION:

WARNING

Compressed air used for cleaning purposes will not exceed 30 psi. Use only with effective chip guarding and personal protective equipment goggles/shield, gloves, etc.

NOTE

If replacing valve assembly, the engine oil cooler bypass valve also has to be replaced. Go to page 6-55 for replacement.

1. Using low-pressure compressed air, dry valve (A).
2. Install new spacer ring (B) on valve (A).
3. Seat threads of valve (A) in engine oil cooler socket (C) by hand.
4. Using wrench, tighten valve (A).
5. Replace left engine cooler (if required) (page 6-19).

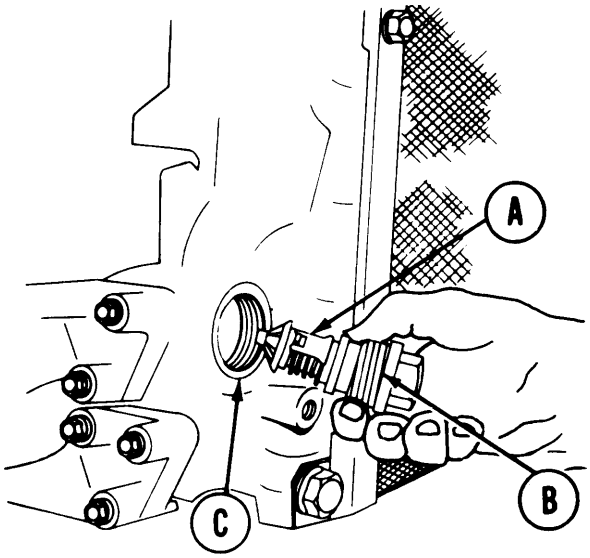

6. Replenish lubricating oil lost during valve assembly replacement (LO 5-5420-202-12).
7. Check engine oil level indicator gage rod (TM 5-5420-202-10).
8. Perform ground hop (page 5-25).
9. Disconnect ground hop equipment (page 5-40).
10. Install powerplant (page 5-14).

End of Task

TA248012

ENGINE OIL COOLER (LEFT AND RIGHT) REPLACEMENT (Sheet 1 of 6)

PROCEDURE INDEX

PROCEDURE	PAGE
Removal	6-19
Installation	6-22

TOOLS: 1/2 in. socket with 1/2 in. drive
Ratchet with 1/2 in. drive
5 in. extension with 1/2 in. drive
9/16 in. combination box and open end wrench
3/4 in. combination box and open end wrench
1-1/2 in. combination box and open end wrench
Torque wrench with 3/8 in. drive, 0-200 lb-in (0-23 NŽm) cap
3/4 in. socket with 3/8 in. drive

SPECIAL TOOLS: Ground hop kit (Item 31, Chapter 3, Section 1)

SUPPLIES
Washer
Drip pan
1/2 inch masking tape (Item 58, Appendix D)
Plastic barrier material (Item 42, Appendix D)
Lubricating oil (Item 44, Appendix D)
Gaskets (2 required)

REFERENCES:
LO 5-5420-202-12
TM 5-5420-202-10

PRELIMINARY PROCEDURES:
Remove powerplant (page 5-2)
Remove engine shroud (page 9-30)

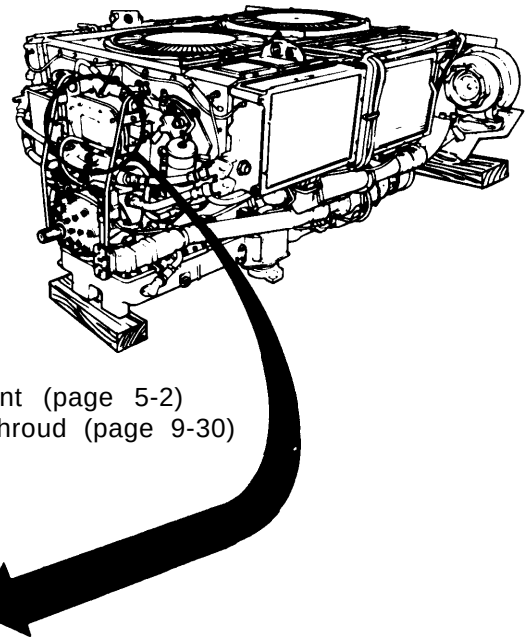

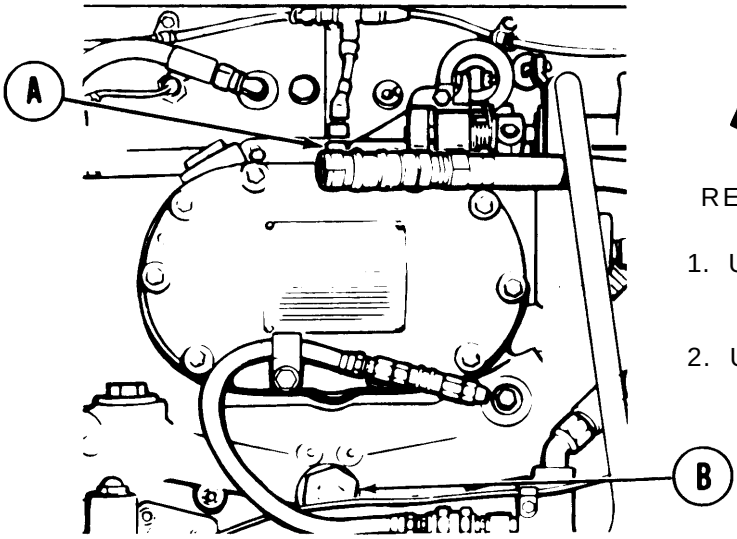

REMOVAL:

1. Using 1/2 inch socket, remove screw and washer (A).
2. Using 3/4 inch wrench, loosen valve (B) six complete turns.

TA248013

ENGINE OIL COOLER (LEFT AND RIGHT) REPLACEMENT (Sheet 2 of 6)

3. Put drip pan on flat surface under oil cooler connectors (C).

4. Using 1-1/2 inch wrench, remove hose (D) at oil cooler connectors (C).

5. Using 1-1/2 inch wrench, remove hose (E) at oil cooler connectors (C).

6. Using 1/2 inch socket, remove six nuts (F) securing two oil cooler connectors (C).

7. Remove two oil cooler connectors and gaskets (C). Throw gaskets away.

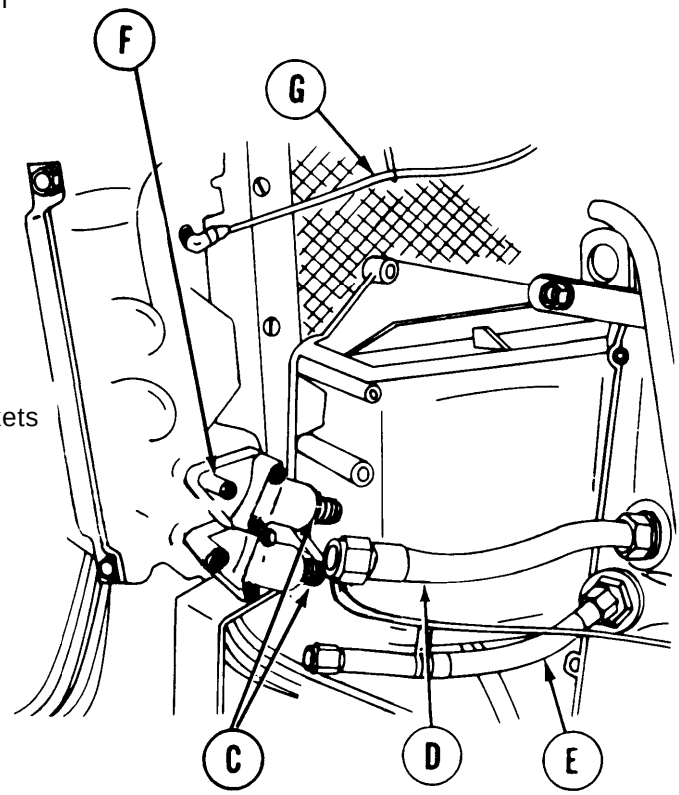

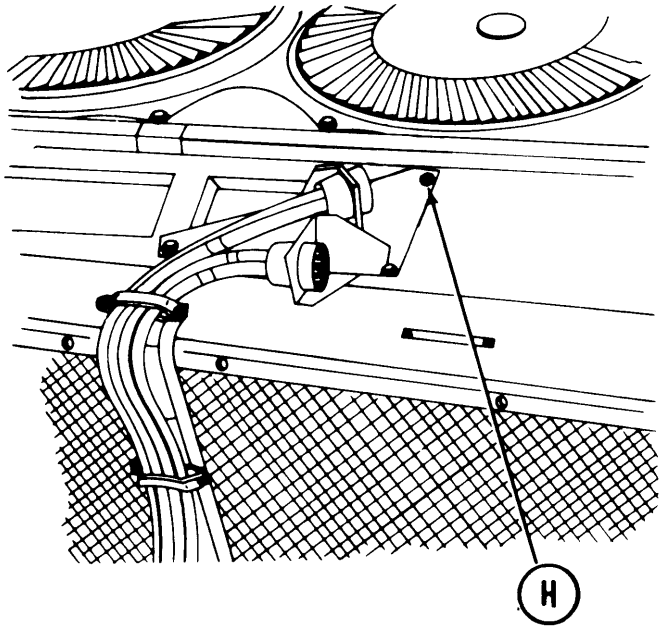

8. Using plastic material and masking tape, wrap ends of hose (D and E) and oil cooler connectors (C) to keep them clean and from dripping.

9. Using 9/16 inch wrench, remove oil cooler vent hose (G) at top of cooler.

10. Using 1/2 inch socket, remove four screws and lockwashers (H).

Go on to Sheet 3

TA248014

ENGINE OIL COOLER (LEFT AND RIGHT) REPLACEMENT (Sheet 3 of 6)

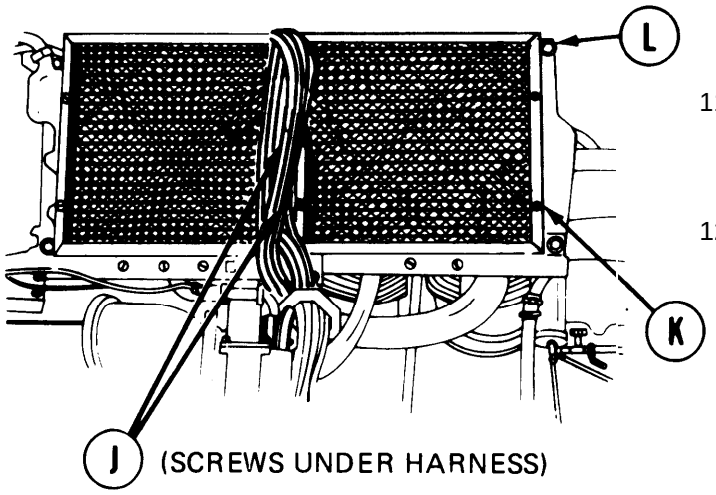

11. Using 1/2 inch socket with extension through harness and into bracket, remove two screws and lockwashers (J).

12. Lower harness away from coolers with bracket attached.

13. Using 1/2 inch socket, remove four screws and lockwashers (K) holding oil cooler screen to cooler.

14. Lift away oil cooler screen.

CAUTION

Support oil cooler to keep it from falling while doing step 15.

15. Using 3/4 inch socket, remove four screws and lockwashers (L) holding oil cooler frame.

16. Lift away oil cooler and mounting brackets.

Go on to Sheet 4

TA248015

ENGINE OIL COOLER (LEFT AND RIGHT) REPLACEMENT (Sheet 4 of 6)

INSTALLATION:

1. Place oil cooler and oil cooler screen mounting bracket into place on oil cooler frame.
2. Start threads of four screws with lockwashers (A) by hand to hold oil cooler in place.
3. Using 3/4 inch socket, tighten screws(A).
4. Lift screen into place onto oil cooler.
5. Start threads of four screws with lockwashers (B) by hand to hold oil cooler screen in place.
6. Using 1/2 inch socket, tighten screws and lockwashers (B).

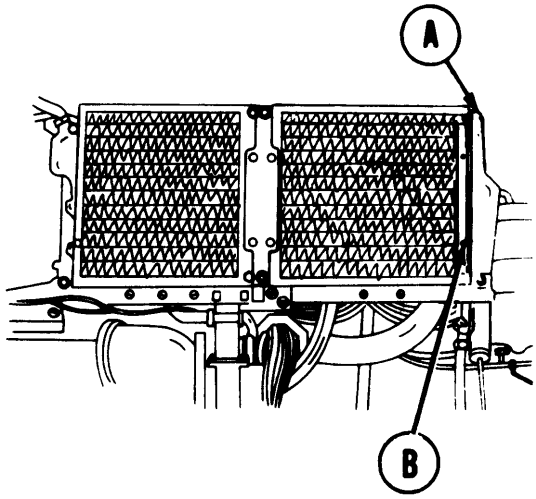

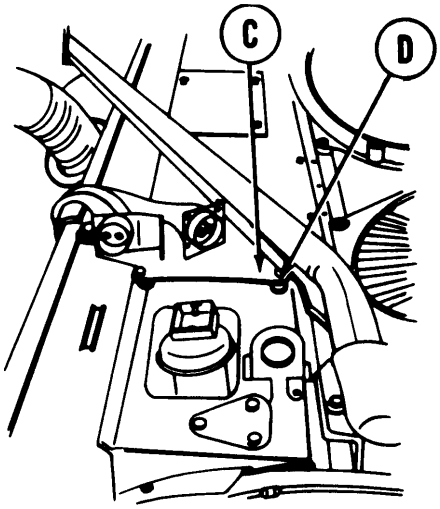

7. Lift starter cable mounting bracket (C) into place at top of oil cooler.
8. Start threads of four screws with lockwashers (D) by hand.
9. Using 1/2 inch socket, tighten screws and lockwashers (D).

Go onto Sheet 5

TA248016

ENGINE OIL COOLER (LEFT AND RIGHT) REPLACEMENT (Sheet 5 of 6)

10. Using 1/2 inch socket with extension through harness and into bracket, install two lockwashers and screws (E).

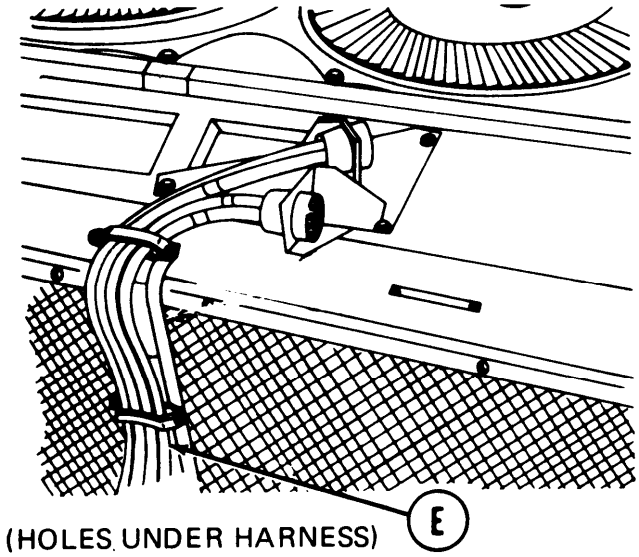

11. Using 9/16 inch wrench, install oil cooler vent hose (F) at top of cooler.

12. Remove plastic material and masking tape from ends of hose (G) and oil cooler connector (H).

13. Using 1/2 inch socket, install three nuts (J) securing gasket and oil cooler connector (H) to oil cooler.

14. Using 1-1/2 inch wrench, install hose (G) at oil cooler connector (H).

15. Remove plastic material and masking tape from ends of hose (K) and oil cooler connector (L).

16. Using 1/2 inch socket, install three nuts (M) securing gasket and oil cooler connector (L) to oil cooler.

17. Using 1-1/2 inch wrench, install hose (K) to oil cooler connector (L).

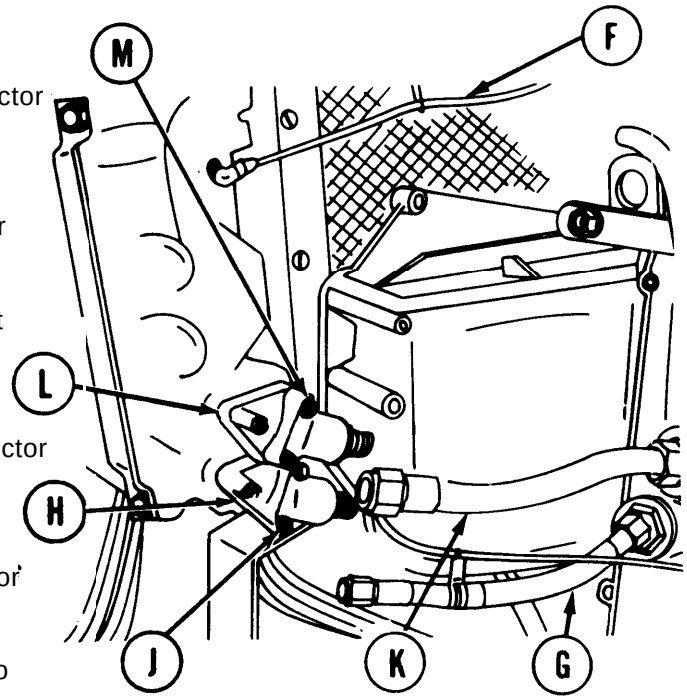

TA248017

Go on to Sheet 6

ENGINE OIL COOLER (LEFT AND RIGHT) REPLACEMENT (Sheet 6 of 6)

18. Using 3/4 inch socket and torque wrench tighten valve (M) to no more than 150 lb-in. (17 NŽm).

19. Install new washer on screw (N).

20. Using 1/2 inch socket, install screw (N).

21. Check engine oil level indicator gage rod. (TM 5-5420-202-10)

22. Replenish lubricating oil lost during oil cooler replacement. (LO 5-5420-202-12)

23. Connect engine for powerplant ground hop (page 5-25).

24. Start and run engine. Check for oil leaks at oil cooler and line connections.

25. Shut down engine. Disconnect engine from powerplant ground hop (page 5-40).

26. Install engine shroud (page 9-31).

27. Install powerplant (page 5-14).

End of Task

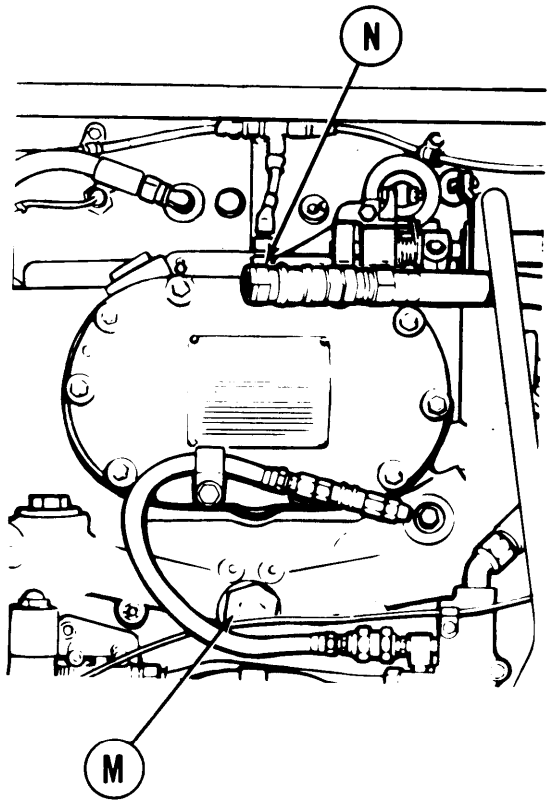

TA248018

THERMOSTATIC TRANSMISSION OIL COOLER VALVE ASSEMBLY (LEFT SIDE) TEST AND REPLACEMENT (Sheet 1 of 7)

PROCEDURE INDEX

PROCEDURE	PAGE
Removal	6-25
Test	6-28
Installation	6-29

TOOLS: 1-1/2 in. open end wrench
1-5/8 in. open end wrench
Automotive adjustable wrench
Ruler
Low-pressure compressed air facility

SUPPLIES: Cooking stove (stored in vehicle)
12 in. length of wire (Item 61, Appendix D)
Pencil (Item 71, Appendix D)
Paper (Item 72, Appendix D)
Rags (Item 65, Appendix D)
Spacer ring
Drip pan
Container

REFERENCES: TM 5-5420-202-10
LO 5-5420-202-12

PRELIMINARY PROCEDURES: Remove transmission shroud (page 9-2).
Remove engine shroud (page 9-30).

Go on to Sheet 2

THERMOSTATIC TRANSMISSION OIL COOLER VALVE ASSEMBLY (LEFT SIDE) TEST AND REPLACEMENT (Sheet 2 of 7)

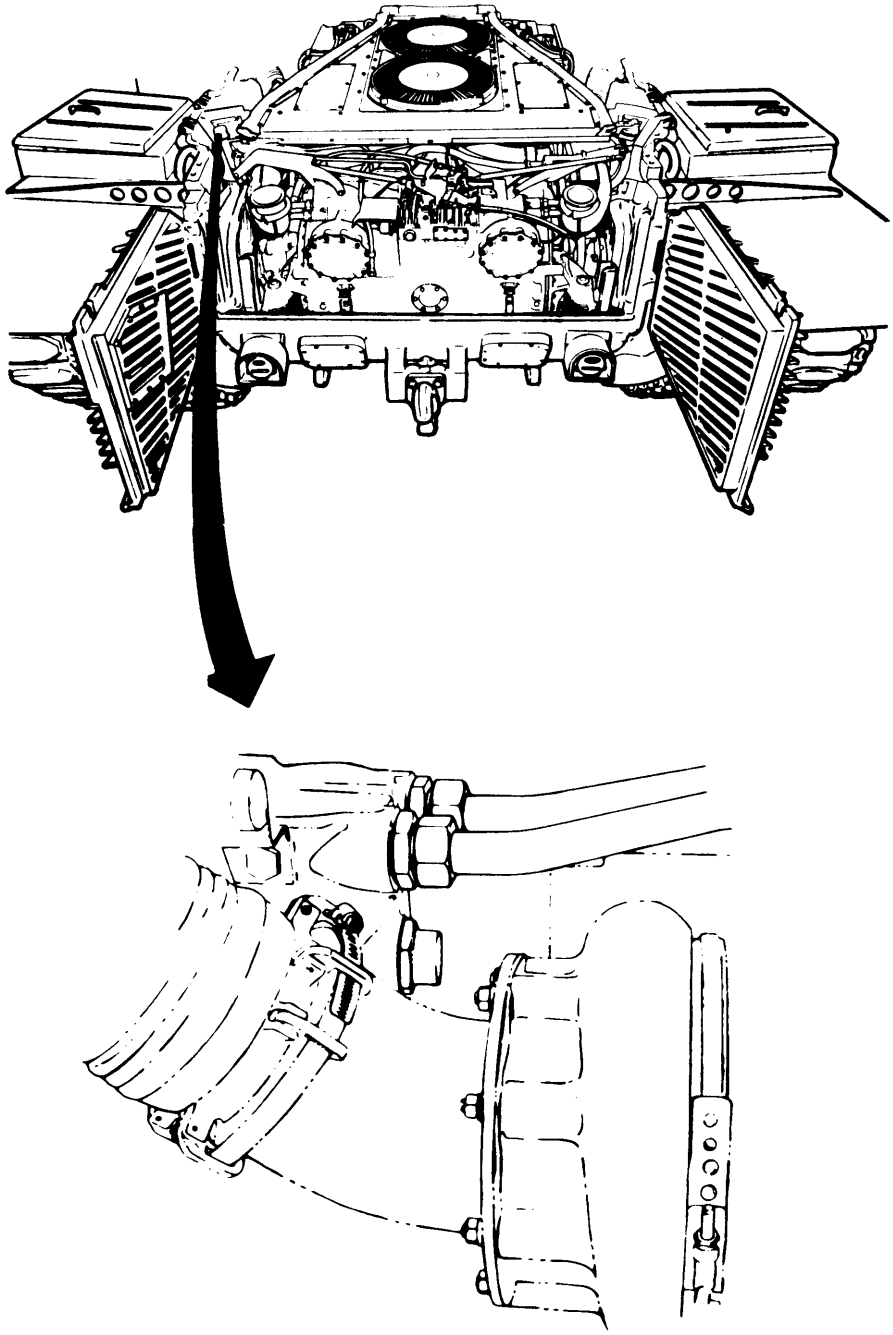

Go on to Sheet 3

TA248020

THERMOSTATIC TRANSMISSION OIL COOLER VALVE ASSEMBLY (LEFT SIDE) TEST AND REPLACEMENT (Sheet 3 of 7)

REMOVAL:

1. Place rags or drip pan under tube fittings (A and B) on transmission.

NOTE

It may be necessary to hold adapters (C and D) with 1-5/8 inch wrench while removing tube fittings (AI and B).

2. Using 1-1/2 inch wrench, remove tube fitting (A) from adapter (C).

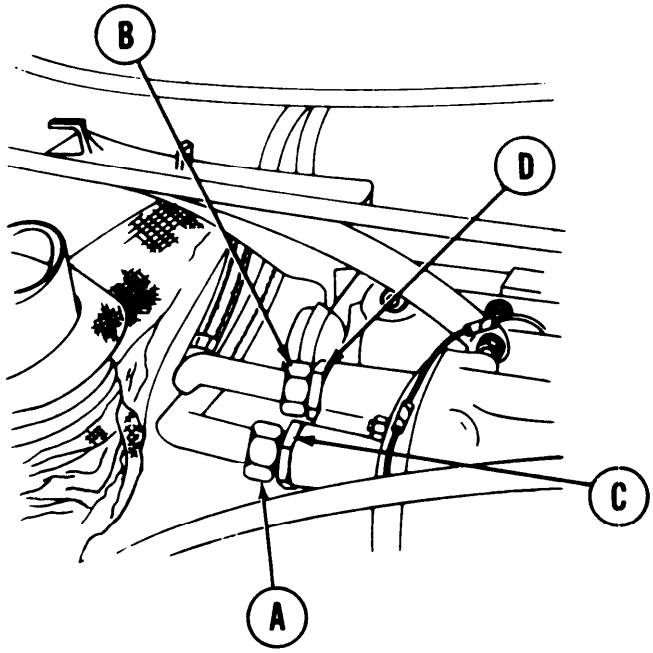

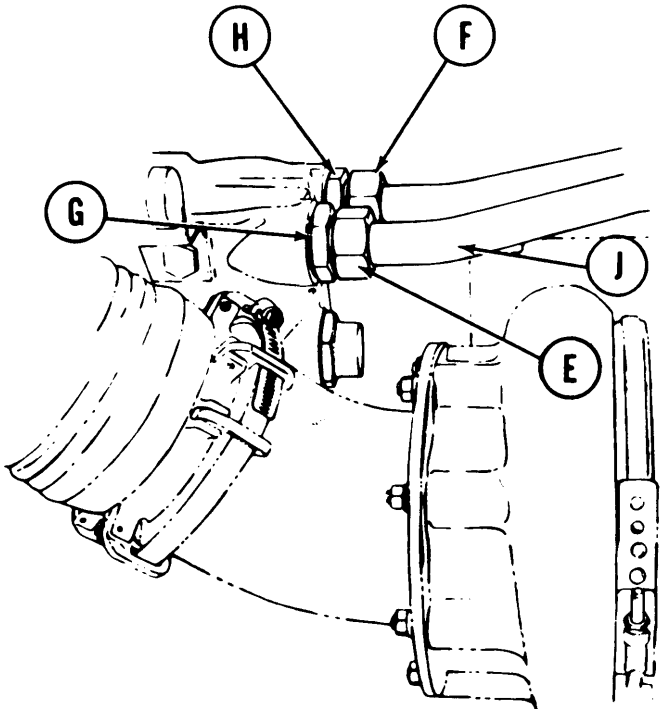

3. Place rags or drip pan under tube fittings (E and F) at oil cooler.

NOTE

It may be necessary to hold adapters (G and H) with 1-5/8 inch wrench while removing tube fittings (E and F).

4. Using 1-1/2 inch wrench, remove outside tube fitting (E) from adapter (G).

5. Move tube (J) aside.

6. Using 1-5/8 inch wrench, remove adapter (G).

7. Using 1-1/2 inch wrench, remove tube fitting (F) from adapter (H).

TA248021

Go on to Sheet 4

THERMOSTATIC TRANSMISSION OIL COOLER VALVE ASSEMBLY (LEFT SIDE) TEST AND REPLACEMENT (Sheet 4 of 7)

8. Using 1-1/2 inch wrench, remove tube fitting (B) from adapter (D).

9. Move tube (K) aside.

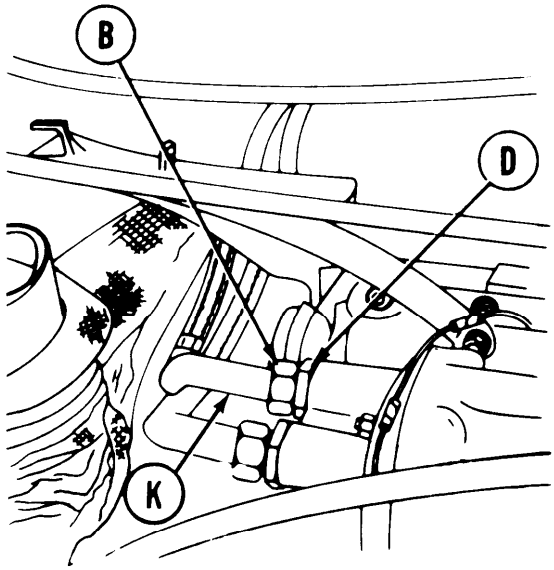

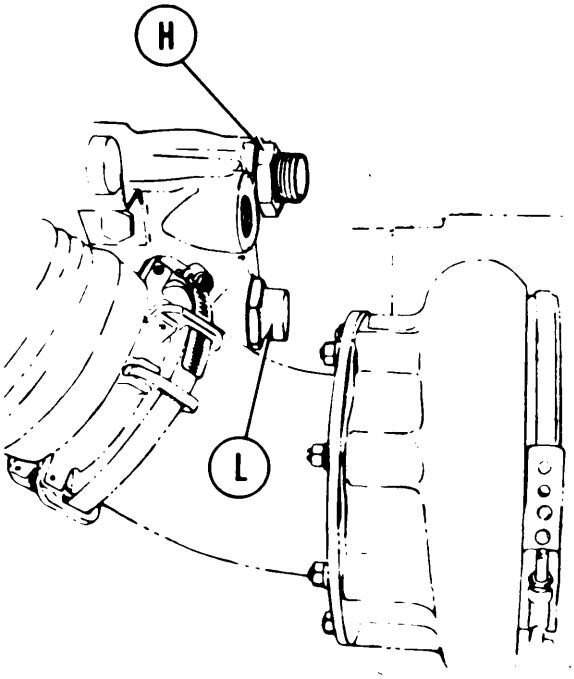

10. Using 1-5/8 inch wrench, remove adapter (H).

11. Using adjustable wrench, remove valve assembly and spacer ring (L). Throw spacer ring away.

TEST:

1. Using cooking stove (A), heat container (B) of clean water to boiling.

2. Using ruler, measure overall length of valve at room temperature. Write down overall length of valve.

3. Using wire, wrap one end tightly around threads (C) on valve.

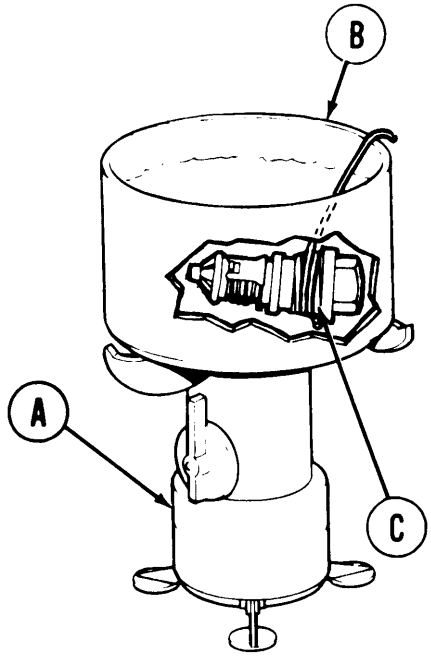

Go on to Sheet 5

THERMOSTATIC TRANSMISSION OIL COOLER VALVE ASSEMBLY (LEFT SIDE) TEST AND REPLACEMENT (Sheet 5 of 7)

4. Place valve in boiling water. Let free end of wire hang over edge of container.

5. After about 30 seconds, use free end of wire to take valve out of water.

6. Using ruler, measure overall length of valve. Write down overall length of valve.

7. Compare length of valve before and after heating. If valve length increased less than 1/4 inch, throw valve away. Get new valve and repeat test. If new valve exceeds 1/4 inch after testing, it may be installed.

WARNING

Compressed air used for cleaning purposes will not exceed 30 psi. Use only with effective chip guarding and personal protective equipment goggles/shield, gloves, etc.

8. Using low-pressure compressed air, dry good valve.

INSTALLATION:

1. Install new spacer ring (A) on valve (B).

2. Using hands, install valve (B) to transmission oil cooler.

3. Using adjustable wrench, tighten valve (B).

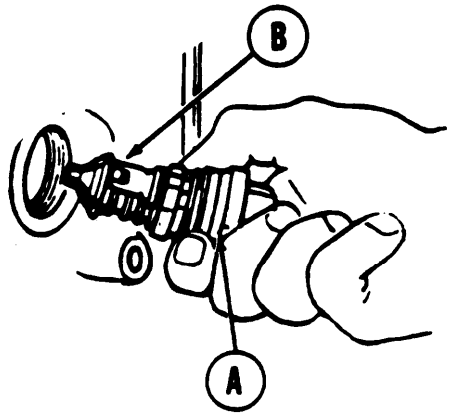

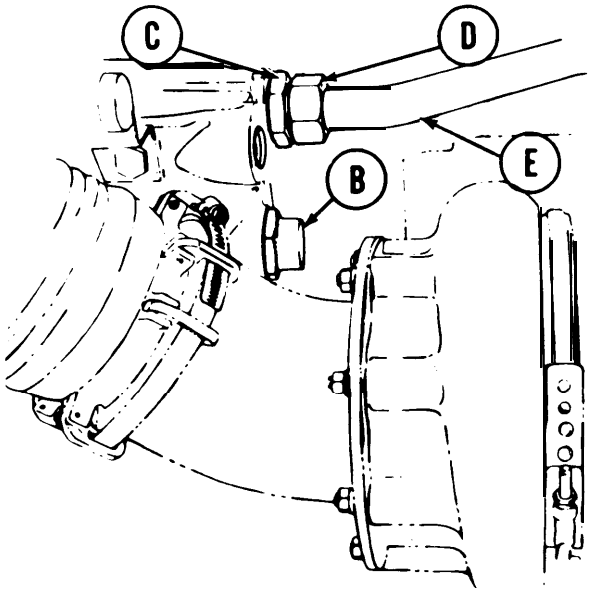

4. Using 1-5/8 inch wrench, install and tighten inside adapter (C).

5. Using hands, install tube fitting (D) on adapter (C).

6. Go to other end of tube (E).

Go on to Sheet 6

TA248023

THERMOSTATIC TRANSMISSION OIL COOLER VALVE ASSEMBLY (LEFT SIDE) TEST AND REPLACEMENT (Sheet 6 of 7)

7. Install tube fitting (F) in adapter (G).

8. Using 1-1/2 inch wrench, tighten tube fitting (F) onto adapter (G).

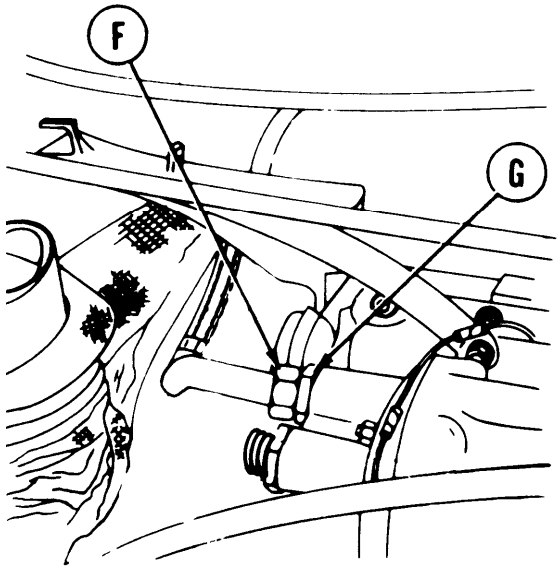

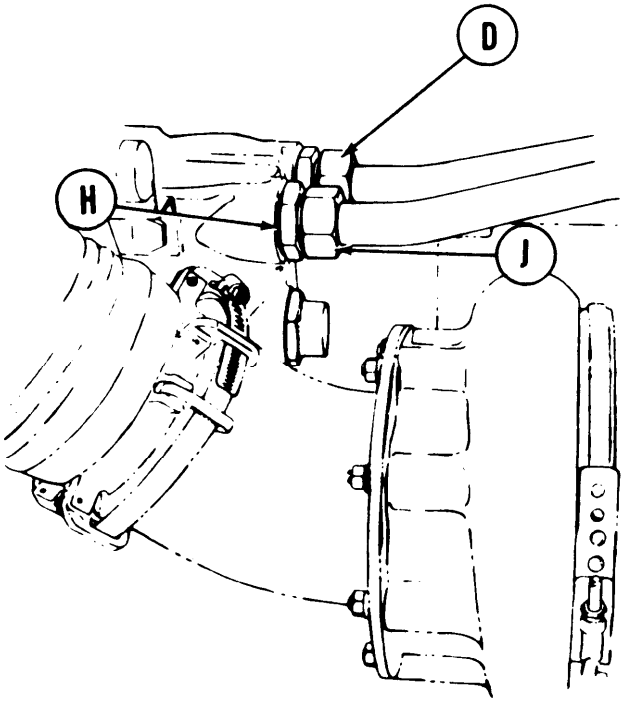

9. Using 1-1/2 inch wrench, tighten tube fitting (D).

10. Using 1-5/8 inch wrench, install adapter (H).

11. Install tube fitting (J) on adapter (H).

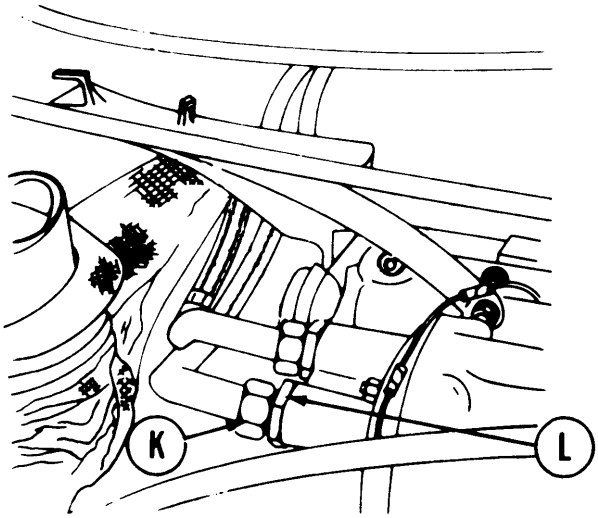

12. Using 1-1/2 inch wrench, install tube fitting (K) on adapter (L).

13. Using 1-1/2 inch wrench, tighten tube fitting (J) at oil cooler.

Go on to Sheet 7

TA248024

THERMOSTATIC TRANSMISSION OIL COOLER VALVE ASSEMBLY (LEFT SIDE) TEST AND REPLACEMENT (Sheet 7 of 7)

14. Replenish oil lost during valve assembly replacement (LO 5-5420-202-12).

15. Remove rags or drip pan from transmission and oil cooler.

16. Start and run engine (TM 5-5420-202-10). Check for oil leaks.

17. Shut down engine.

18. Install engine shroud (page 9-31).

19. Install transmission shroud (page 9-6).

End of Task

THERMOSTATIC TRANSMISSION OIL COOLER VALVE ASSEMBLY (RIGHT SIDE) TEST AND REPLACEMENT (Sheet 1 of 6)

PROCEDURE INDEX

PROCEDURE	PAGE
Removal	6-32
Test	6-35
Installation	6-36

TOOLS: 1-1/2 in. open end wrench
1-5/8 in. open end wrench
Automotive, adjustable wrench
Ruler
Low-pressure compressed air facility (30 psi maximum)

SUPPLIES: Cooking stove (stored in vehicle)
12 in. length of wire (Item 61, Appendix D)
Pencil (Item 71, Appendix D)
Paper (Item 72, Appendix D)
Rags (Item 12, Appendix D)
Spacer ring
Cent airier

REFERENCES: TM 5-5420-202-10
LO 5-5420-202-12

PRELIMINARY PROCEDURES: Remove transmission shroud (page 9-2).
Remove engine shroud (page 9-30).

Go on to Sheet 2

THERMOSTATIC TRANSMISSION OIL COOLER VALVE ASSEMBLY (RIGHT SIDE) TEST AND REPLACEMENT (Sheet 2 of 6)

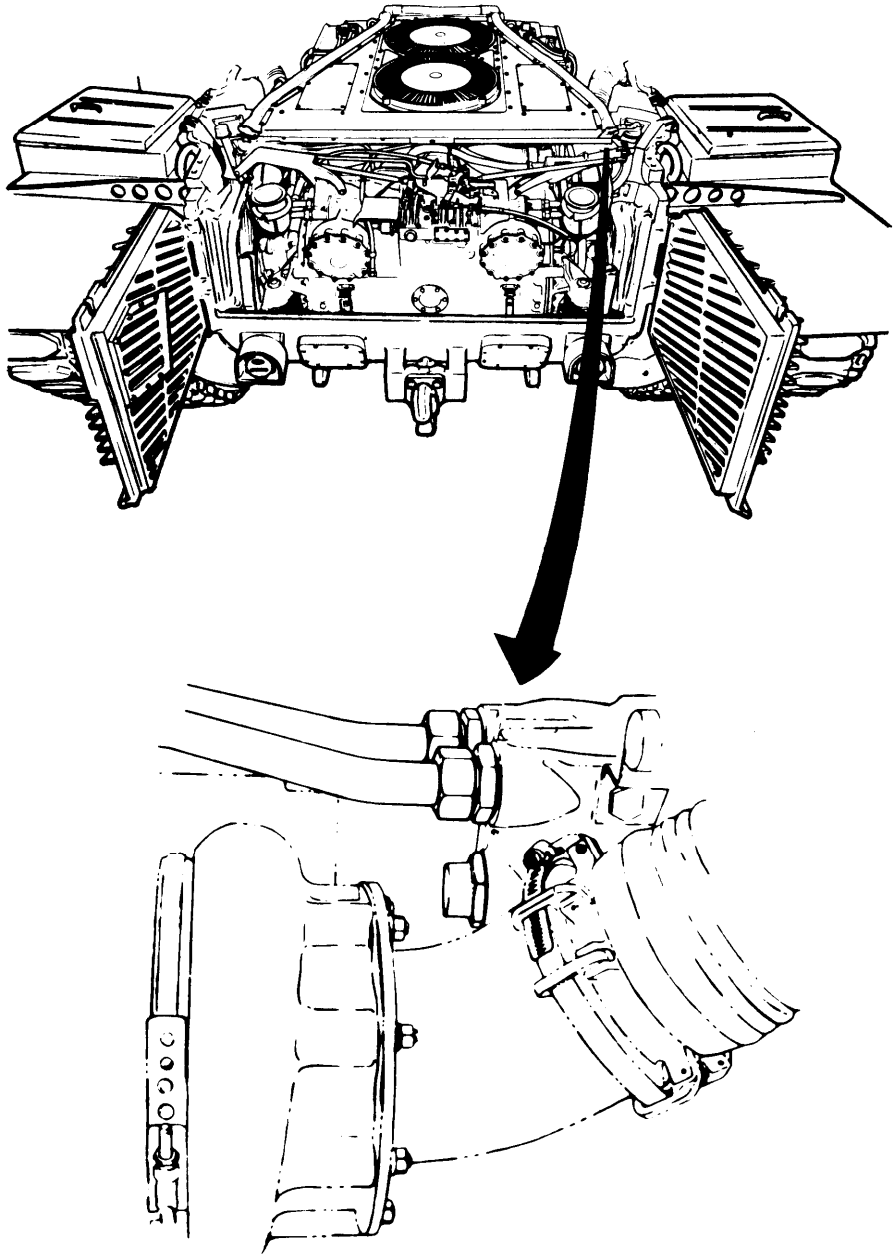

Go on to Sheet 3

TA248026

THERMOSTATIC TRANSMISSION OIL COOLER VALVE ASSEMBLY (RIGHT SIDE) TEST AND REPLACEMENT (Sheet 3 of 6)

REMOVAL:

1. Place rags or drip pan under tube fittings (A and B) on transmission.

NOTE

It may be necessary to hold adapters (C and D) with 1-5/8 inch wrench while removing tube fittings (A and B).

2. Using 1-1/2 inch wrench, remove tube fitting (A) from adapter (C).

3. Using 1-1/2 inch wrench, remove tube fitting (B) from adapter (D).

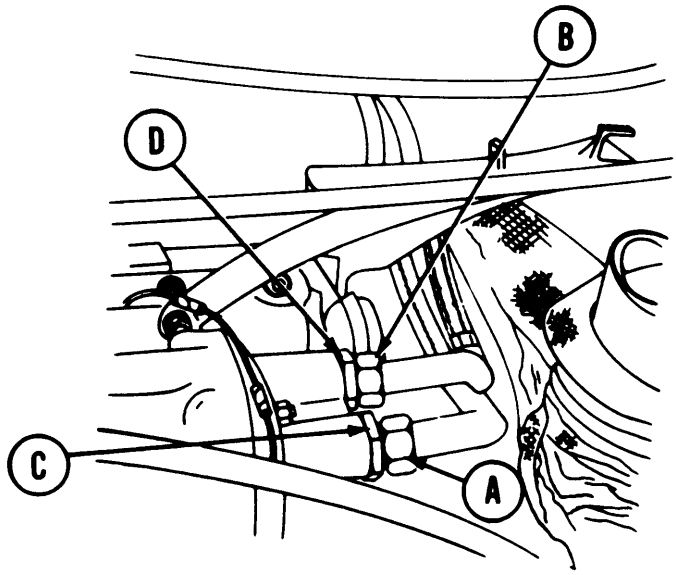

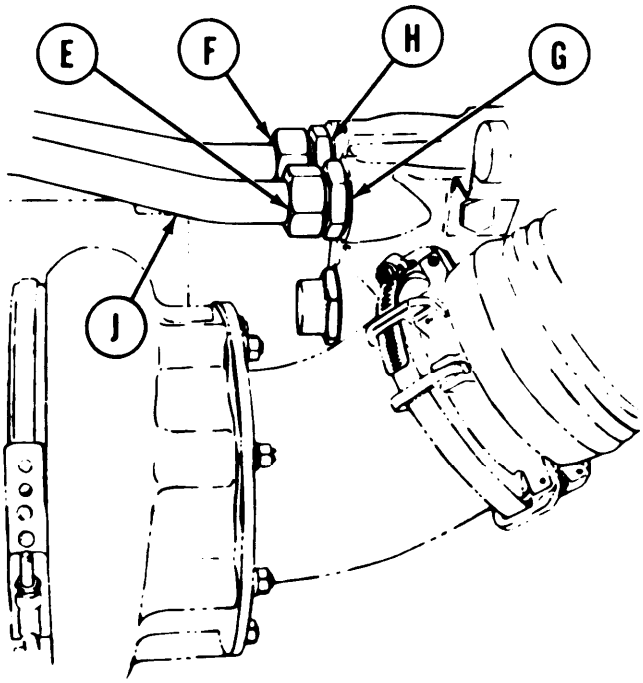

4. Place rags or drip pan under tube fittings (E and F) on oil cooler.

NOTE

It may be necessary to hold adapters (G and H) with 1-5/8 inch wrench while removing tube fittings (E and F).

5. Using 1-1/2 inch wrench, remove outside tube end fitting (E) from adapter (G).

6. Using hands, move outside tube (J).

7. Using 1-5/8 inch wrench, remove adapter (G).

Go on to Sheet 4

TA248027

THERMOSTATIC TRANSMISSION OIL COOLER VALVE ASSEMBLY (RIGHT SIDE) TEST AND REPLACEMENT (Sheet 4 of 6)

8. Using 1-1/2 inch wrench, remove tube fitting (F) from adapter (H).

9. Using hands, move tube (K).

10. Using 1-5/8 inch wrench, remove adapter (H).

11. Using adjustable wrench, remove valve assembly and spacer ring (L). Throw spacer ring away.

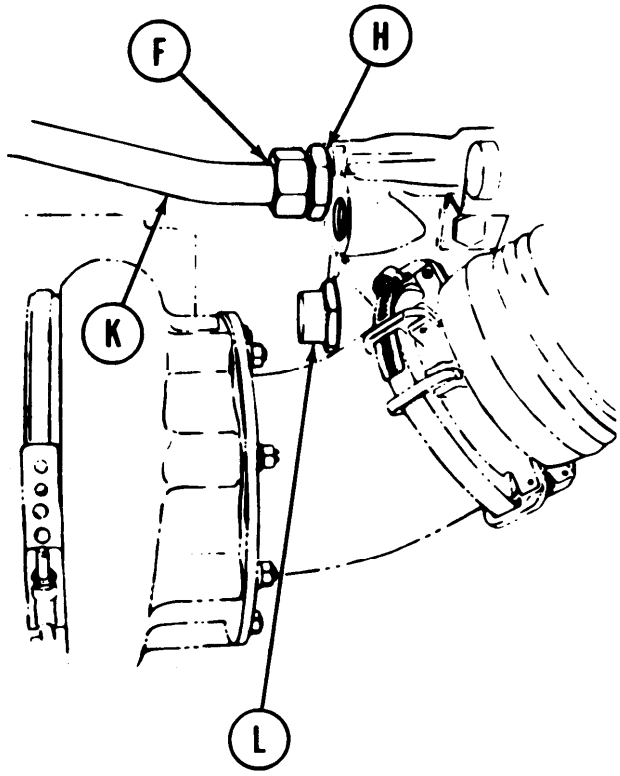

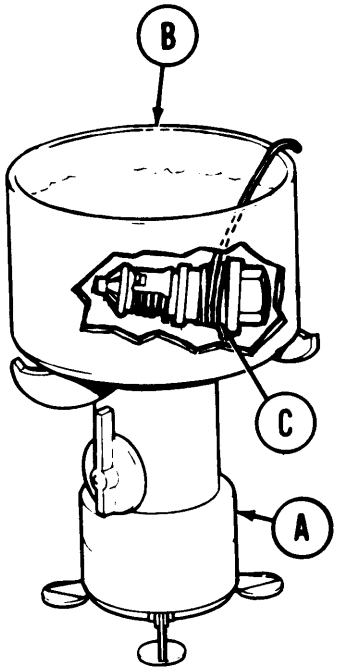

TEST:

1. Using cooking stove (A), heat container (B) of clean water to boiling.

2. Using ruler, measure overall length of valve at room temperature. Write down overall length of valve.

3. Using wire, wrap one end tightly around threads (C) of valve.

4. Place valve in boiling water just so valve is covered. Let free end of wire hang over edge of container.

5. After about 30 seconds, use free end of wire to take valve out of water.

Go on to Sheet 5

TA248028

THERMOSTATIC TRANSMISSION OIL COOLER VALVE ASSEMBLY (RIGHT SIDE) TEST AND REPLACEMENT (Sheet 5 of 6)

6. Using ruler, measure overall length of valve. Write down overall length of valve.

7. Compare length of valve before and after heating. If valve length increased less than 1/4 inch, throw valve away. Get new valve and repeat test. If new valve exceeds 1/4 inch after testing, may be installed.

WARNING

Compressed air used for cleaning purposes will not exceed 30 psi. Use only with effective chip guarding and personal protective equipment goggles/shield, gloves, etc.

8. Using low-pressure compressed air, dry good valve.

INSTALLATION:

1. Install new spacer ring (A) on valve (B).

2. Using hands, install valve (B) to transmission oil cooler.

3. Using adjustable wrench, tighten valve (B).

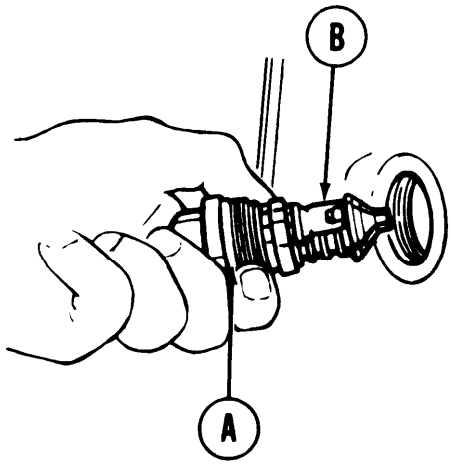

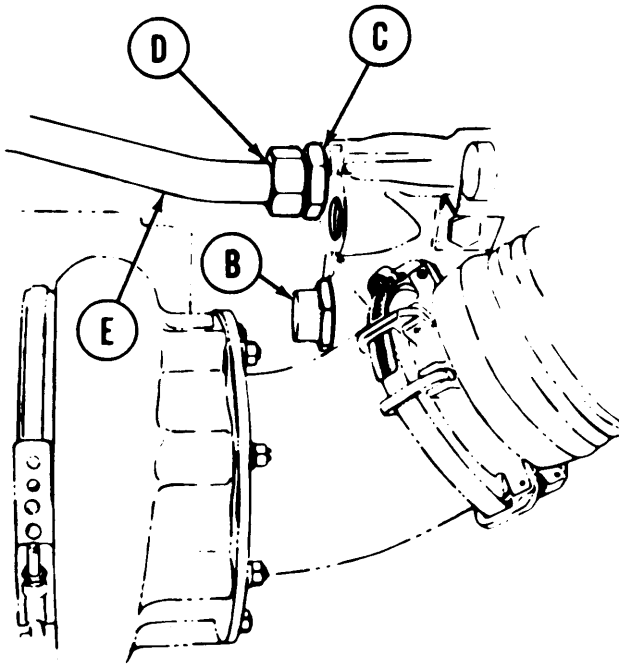

4. Using 1-5/8 inch wrench, install inside adapter (C).

5. Using hands, install tube fitting (D) on adapter (C).

6. Go to other end of tube (E).

Go on to Sheet 6

TA248029

THERMOSTATIC TRANSMISSION OIL COOLER VALVE ASSEMBLY (RIGHT SIDE) TEST AND REPLACEMENT (Sheet 6 of 6)

7. Using 1-1/2 inch wrench, install and tighten tube fitting (F) on adapter (G).

8. Using 1-1/2 inch wrench, tighten tube fitting (D) at oil cooler.

9. Using 1-5/8 inch wrench, install adapter (H).

10. Using hands, install tube fitting (J) on adapter (H).

11. Go to other end of tube (K) and using 1-1/2 inch wrench, install and tighten tube fitting (L) on adapter (M).

12. Using 1-1/2 inch wrench, tighten tube fitting (J) at oil cooler.

13. Replenish oil lost during valve assembly replacement (LO 5-5420-202-12).

14. Remove rags or drip pan from transmission and oil cooler.

15. Start and run engine (TM 5-5420-202-10). Check for oil leaks.

16. Shut down engine.

17. Install engine shroud (page 9-31).

18. Install transmission shroud (page 9-6).

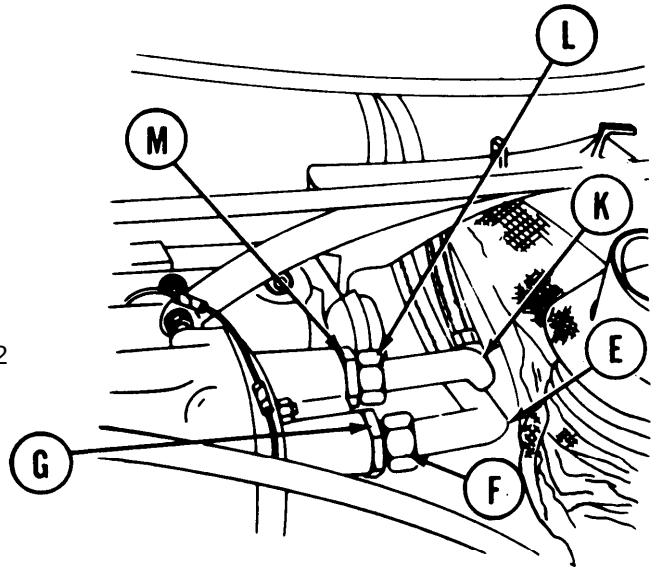

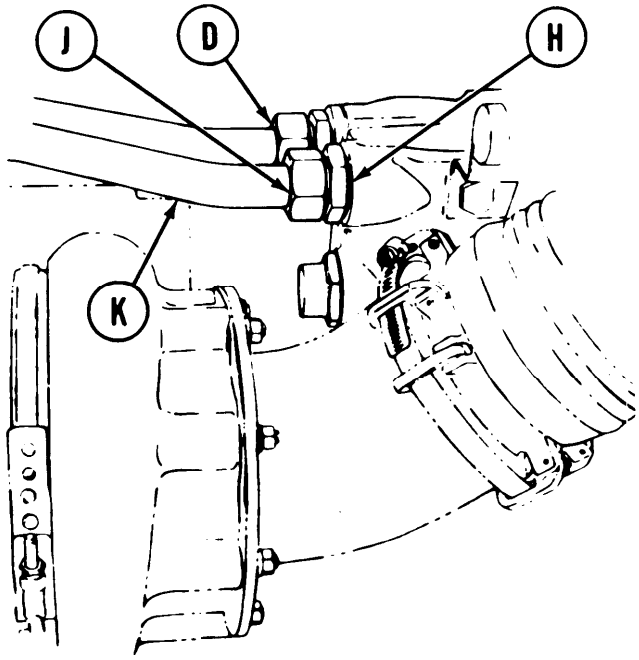

End of Task

TA248030

TRANSMISSION OIL COOLER REPLACEMENT (Sheet 1 of 10)

PROCEDURE INDEX

PROCEDURE	PAGE
Removal	6-38
Installation	6-43

TOOLS: 1/2 in. socket with 3/8 in. drive
6 in. extension with 3/8 in. drive
Ratchet with 3/8 in. drive
1/2 in. combination wrench
3/4 in. combination wrench
1-5/8 in. combination wrench
Screwdriver
1-1/2 in. combination wrench

SPECIAL TOOLS: Ground hop kit (Item 31, Chapter 3, Section 1).

SUPPLIES: Drip pan
1/2 in. masking tape (Item 58, Appendix D)
Plastic barrier material (Item 42, Appendix D)
Rags (Item 65, Appendix D)
Cover for turbosupercharger air inlet port

PERSONNEL: Two

REFERENCE: LO 5-5420-202-12

PRELIMINARY PROCEDURES: Remove powerplant (page 5-2)
Remove engine shroud (page 9-30)

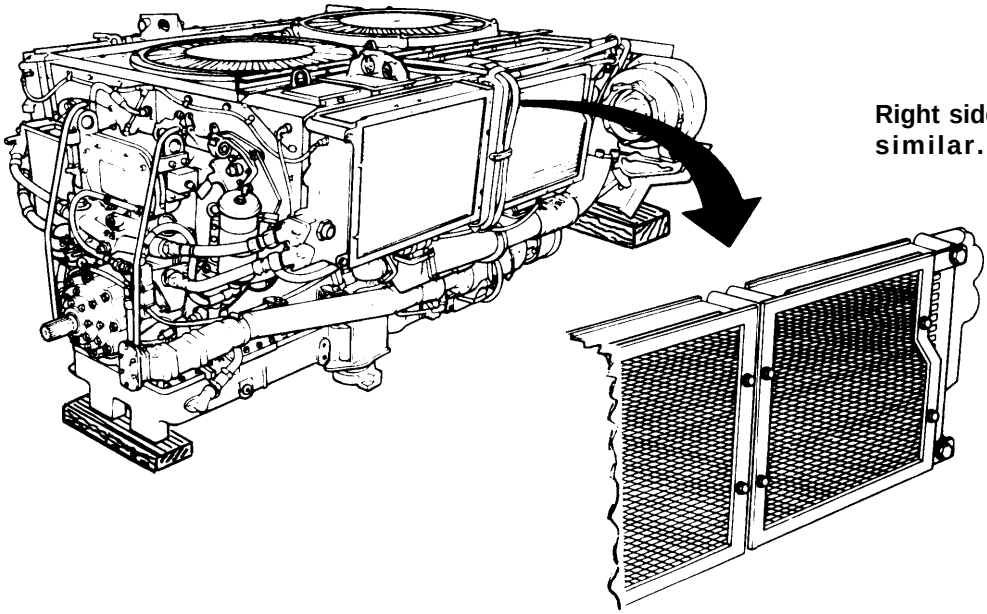

NOTE

Right side shown, left side similar.

Go on to Sheet 2

TA248031

TRANSMISSION OIL COOLER REPLACEMENT (Sheet 2 of 10)

NOTE

Removal procedures are the same for the right and left coolers except that the upper rear mount bolt on the right cooler also secures support bracket (A).

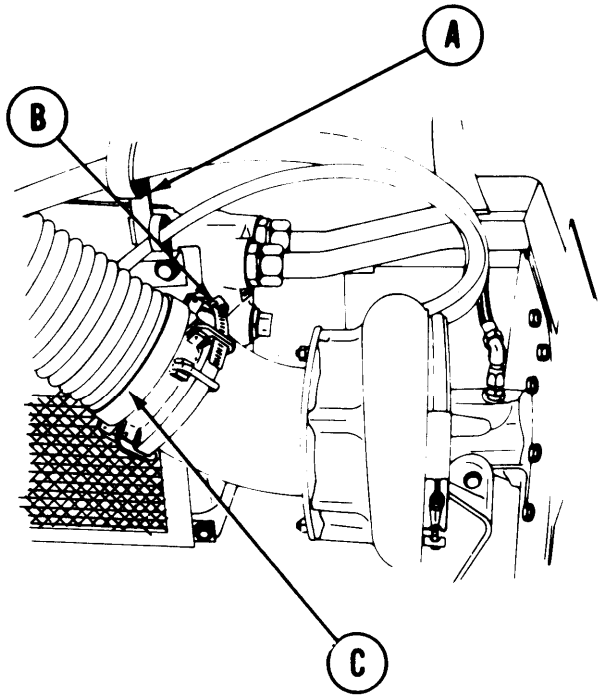

REMOVAL:

1. Using screwdriver, loosen clamp (B) to remove air inlet hose (C). Remove air inlet hose (C).

2. Place cover over air inlet port to keep out dirt.

3. Place drip pan or rags under transmission adapters (D).

NOTE

It may be necessary to hold adapters (C and D) with 1-5/8 inch wrench while removing tube fittings (A and B).

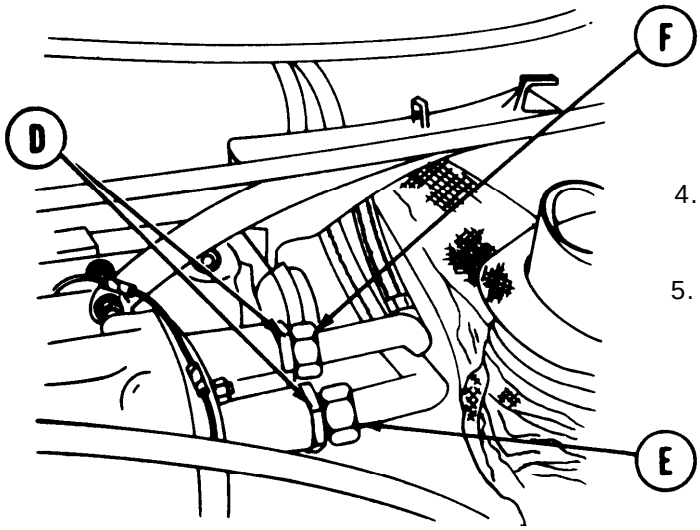

4. Using 1-1/2 inch wrench, remove tube (E) at transmission adapters (D).

5. Using 1-1/2 inch wrench, remove tube (F) at transmission adapters (D).

Go on to Sheet 3

TA248032

TRANSMISSION OIL COOLER REPLACEMENT (Sheet 3 of 10)

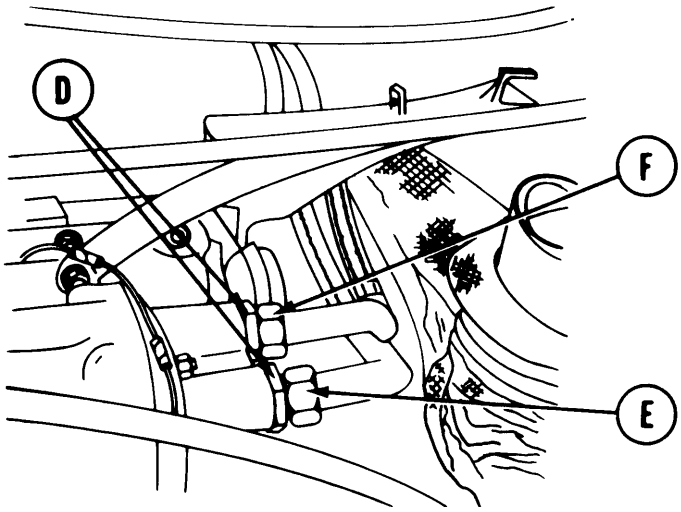

6. Using plastic barrier material and masking tape, wrap ends of tubes (E and F) and transmission adapters (D) to keep out dirt.

7. Place drip pan or rags under cooler adapters (G).

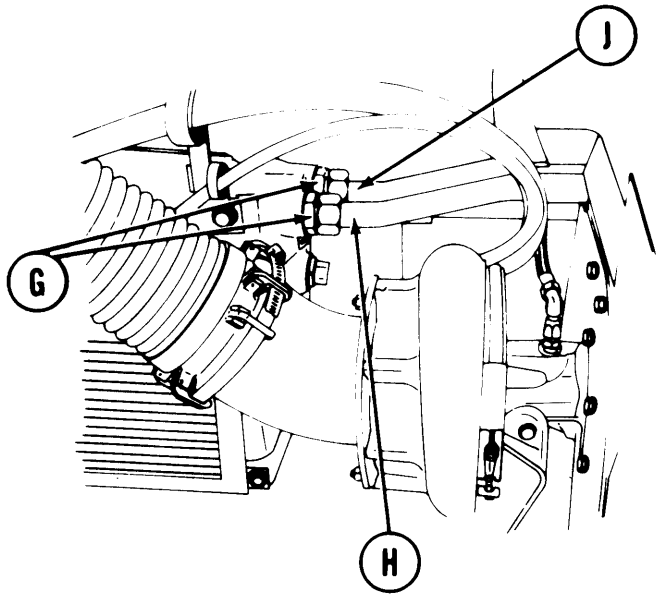

8. Using 1-1/2 inch wrench, remove tube (H) at cooler adapters (G).

9. Using 1-1/2 inch wrench, remove tube (J) at cooler adapters (G).

10. Using plastic barrier material and masking tape, wrap ends of tubes (H and J) and cooler adapters (G) to keep out dirt.

11. Move tubes out of the way toward rear of powerplant.

Go on to Sheet 4

TA248033

TRANSMISSION OIL COOLER REPLACEMENT (Sheet 4 of 10)

12. Using 1/2 inch wrench, remove four screws and lockwashers (K).

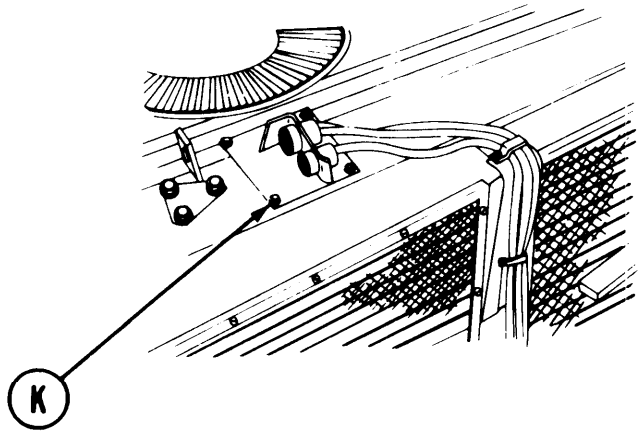

13. Using 1/2 inch socket and extension through harness and into bracket, remove two screws and lockwashers (L).

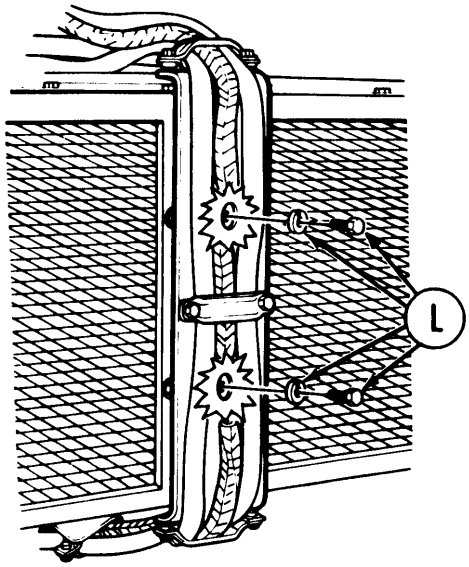

14. Lower harness away from coolers with brackets attached.

Go on to Sheet 5

TA248034

TRANSMISSION OIL COOLER REPLACEMENT (Sheet 5 of 10)

15. Using 1/2 inch socket, remove two screws and lockwashers (M) holding oil cooler screen to oil cooler.

16. Lift away oil cooler screen.

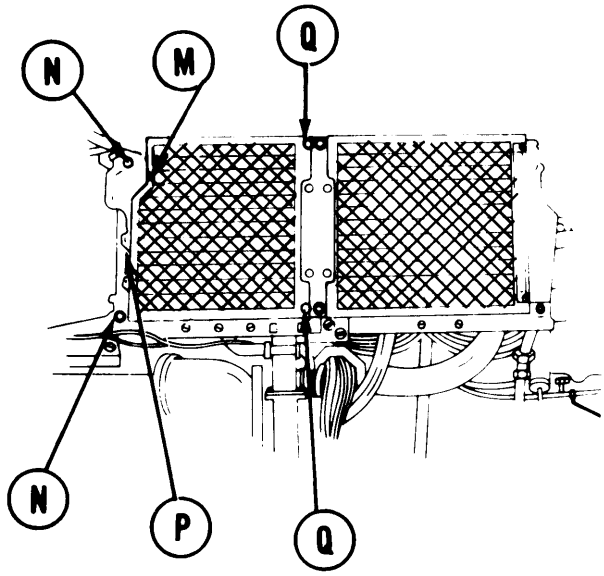

CAUTION

Two persons are required to support oil cooler to keep it from falling while doing steps 17 thru 20.

17. Using 3/4 inch wrench, remove two screws and lockwashers (N) holding oil cooler screen mounting bracket (P) to oil cooler and oil cooler to oil cooler frame.

18. Remove oil cooler screen mounting bracket (P).

19. Using 3/4 inch wrench, remove two screws and lockwashers (Q) holding oil cooler to oil cooler frame.

20. Lift away oil cooler.

Go on to Sheet 6

TA248035

TRANSMISSION OIL COOLER REPLACEMENT (Sheet 6 of 10)

INSTALLATION:

CAUTION

Two persons are required to support oil cooler to keep it from falling while doing steps 1 thru 3.

NOTE

Installation procedures are the same for the right and left coolers except that the upper rear mount bolt on the right cooler also secures support bracket (A).

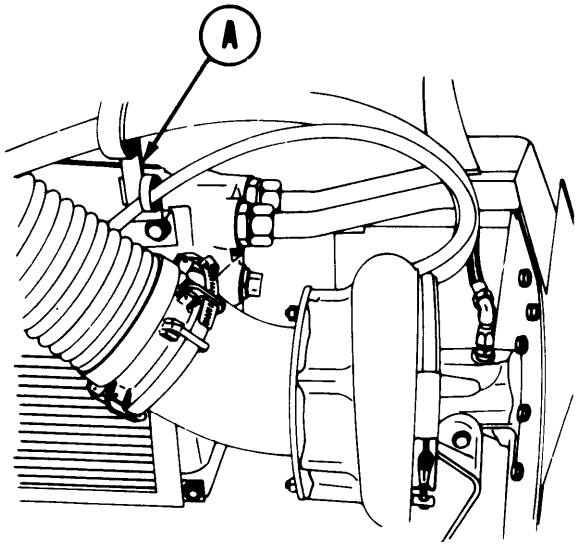

1. Position oil cooler and oil cooler screen mounting bracket (B) into place on oil cooler frame.

2. Start threads of four screws with lockwashers (C) by hand to hold oil cooler and oil cooler screen mounting bracket in place.

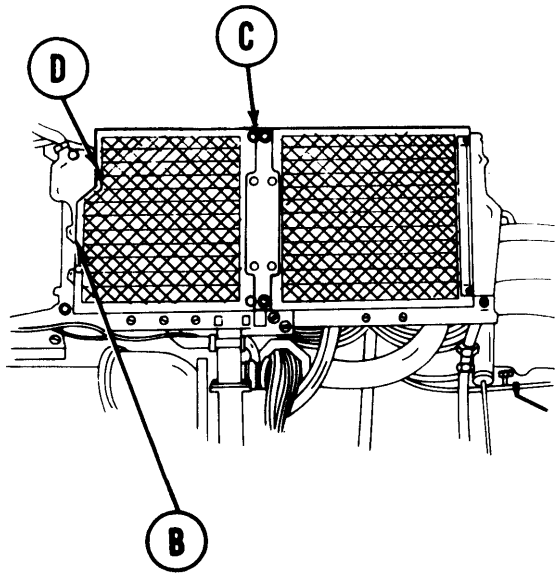

3. Using 3/4 inch wrench, tighten screws and lockwashers (C).

4. Position oil cooler screen into place on an oil cooler.

5. Start threads of two screws and lockwashers (D) by hand to hold screen in place.

Go on to Sheet 7

TA248036

TRANSMISSION OIL COOLER REPLACEMENT (Sheet 7 of 10)

6. Using 1/2 inch socket, tighten screws and lockwashers (D).

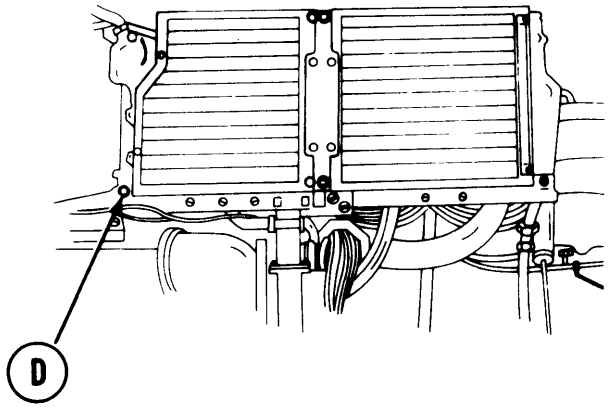

7. Lift starter cable mounting bracket (E) into place at top of oil cooler.

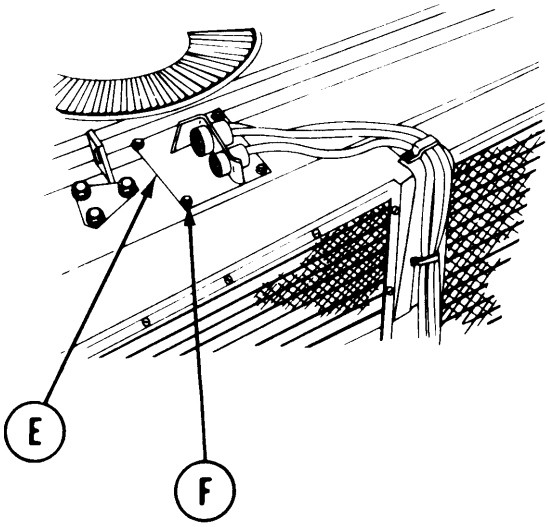

8. Start threads of four screws with lockwashers (F) by hand.

9. Using 1/2 inch wrench, tighten four screws and lockwashers (F).

Go on to Sheet 8

TA248037

TRANSMISSION OIL COOLER REPLACEMENT (Sheet 8 of 10)

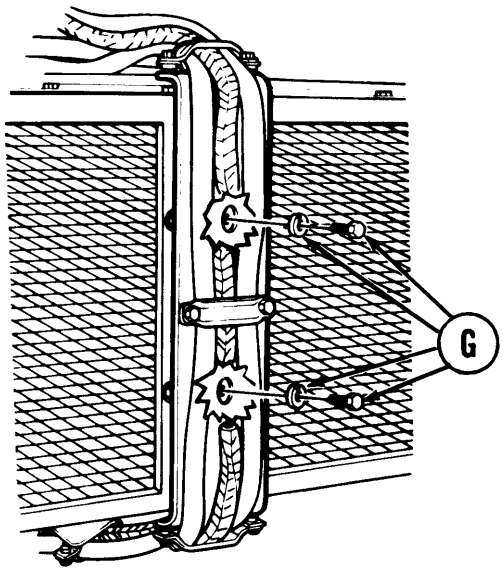

10. Using 1/2 inch socket with extension through harness, install screws and lockwashers (G).

11. Remove plastic barrier material and masking tape from end of tube (H) and cooler adapter (J).

12. Using 1-1/2 inch wrench, install tube (H) to cooler adapter (J).

13. Remove plastic barrier material and masking tape from ends of tube (K) and cooler adapter (L).

14. Using 1-1/2 inch wrench, install tube (K) to cooler adapter (L).

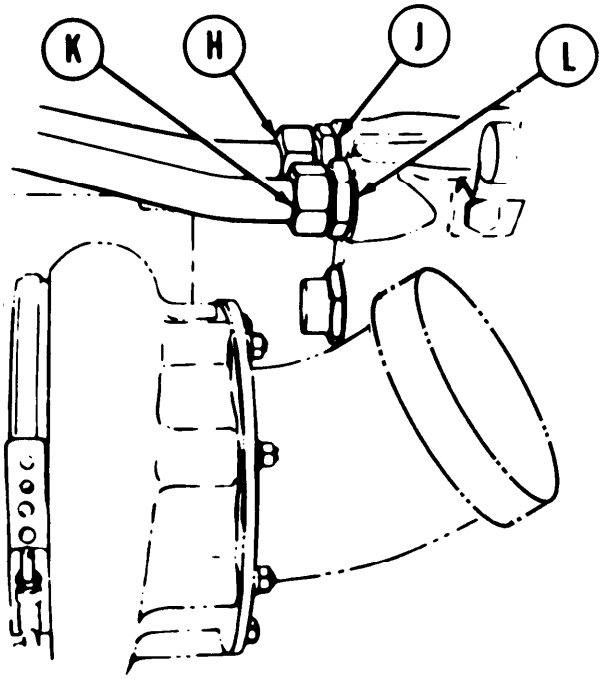

TA248038

Go on to Sheet 9

TRANSMISSION OIL COOLER REPLACEMENT (Sheet 9 of 10)

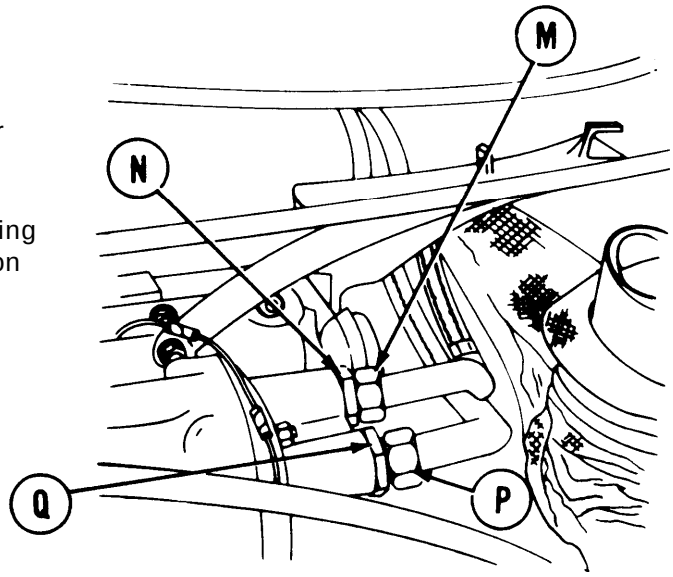

15. Remove drip pan or rags from under cooler connectors.

16. Remove plastic barrier material and masking tape from ends of tube (M) and transmission adapter (N).

17. Using 1-1/2 inch wrench, install tube (M) to transmission adapter (N).

18. Remove plastic barrier material and masking tape from ends of tube (P) and transmission adapter (Q).

19. Using 1-1/2 inch wrench, install tube (P) to transmission adapter (Q).

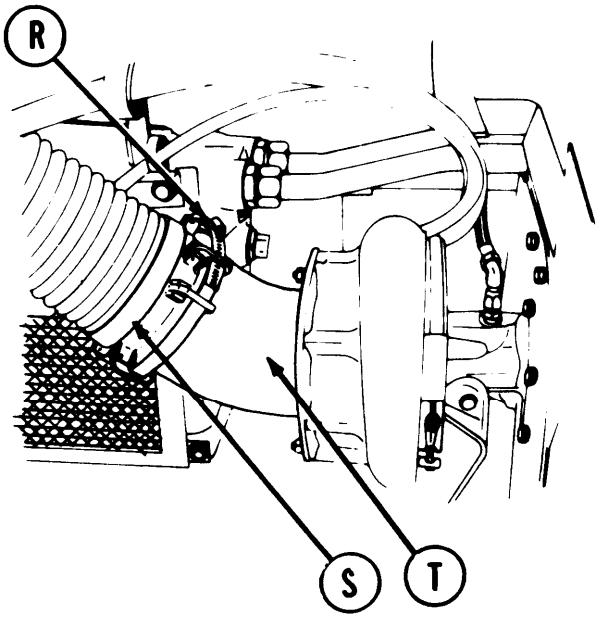

20. Using rags, wipe up oil which may have dripped or leaked during oil cooler replacement.

21. Remove cover from turbosupercharger air inlet port.

22. Position clamp (R) and air inlet hose (S) onto elbow (T).

23. Using screwdriver, tighten clamp (R).

Go on to Sheet 10

TA248039

TRANSMISSION OIL COOLER REPLACEMENT (Sheet 10 of 10)

24. Replenish oil lost during oil cooler replacement. (LO 5-5420-202-12)

25. Connect engine for powerplant ground hop (page 5-25).

26. Start and run engine. Check for oil leaks at oil cooler and line connectors.

27. Shut down engine. Disconnect engine from powerplant ground hop (page 5-40).

28. Install engine shroud (page 9-31).

29. Install powerplant (page 5-14).

End of Task

OIL COOLERS- CLEANING (Sheet 1 of 3)

TOOLS: Low-pressure compressed air facility (30 psi maximum)

SUPPLIES: Detergent (Item 33, Appendix D)
Water

SPECIAL TOOLS: Oil Cooler Cleaner
(Item 33, Chapter 3, Section 1)

REFERENCE: TM 5-5420-202-10

PRELIMINARY PROCEDURES:
Remove top deck frames (page 16-21)
Remove engine shroud (page 9-30)
Remove access cover (right bank) (page 6-107)
Remove access cover (left bank) (page 6-112)
Remove screens if powerplant is removed (page 6-51 and 6-53)
Open hull drains (TM 5-5420-202-10)

CLEANING:

WARNING

Always wear safety glasses or goggles when cleaning oil coolers to prevent dirt particles and cleaning agent from splashing in eyes.

NOTE

The oil cooler cleaning tool will clean the two engine oil coolers as well as the two transmission oil coolers with the powerplant in or out of the vehicle.

If oil coolers are to be cleaned with powerplant removed, oil cooler screens must be removed as part of preliminary procedures (pages 6-51 and 6-53).

Go on to Sheet 2

OIL COOLERS - CLEANING (Sheet 2 of 3)

NOTE

If powerplant is installed in vehicle, all preliminary procedures must be accomplished prior to cleaning. For cleaning coolers in-or-out of vehicle, make sure oil filler and indicator covers are tightly closed. Cover all exposed engine openings.

1. Mix one part detergent to approximately five parts of water as cleaning solution. Insert siphon hose (A) into cleaning solution container (B).

WARNING

Compressed air used for cleaning purposes will not exceed 30 psi. Use only with effective chip guarding and personal protective equipment goggles/shield, gloves, etc.

2. Connect cleaner air inlet (C) to 30 psi air supply.

3. Position cleaner head (D) behind oil engine cooler fins (E) with spray holes toward fins.

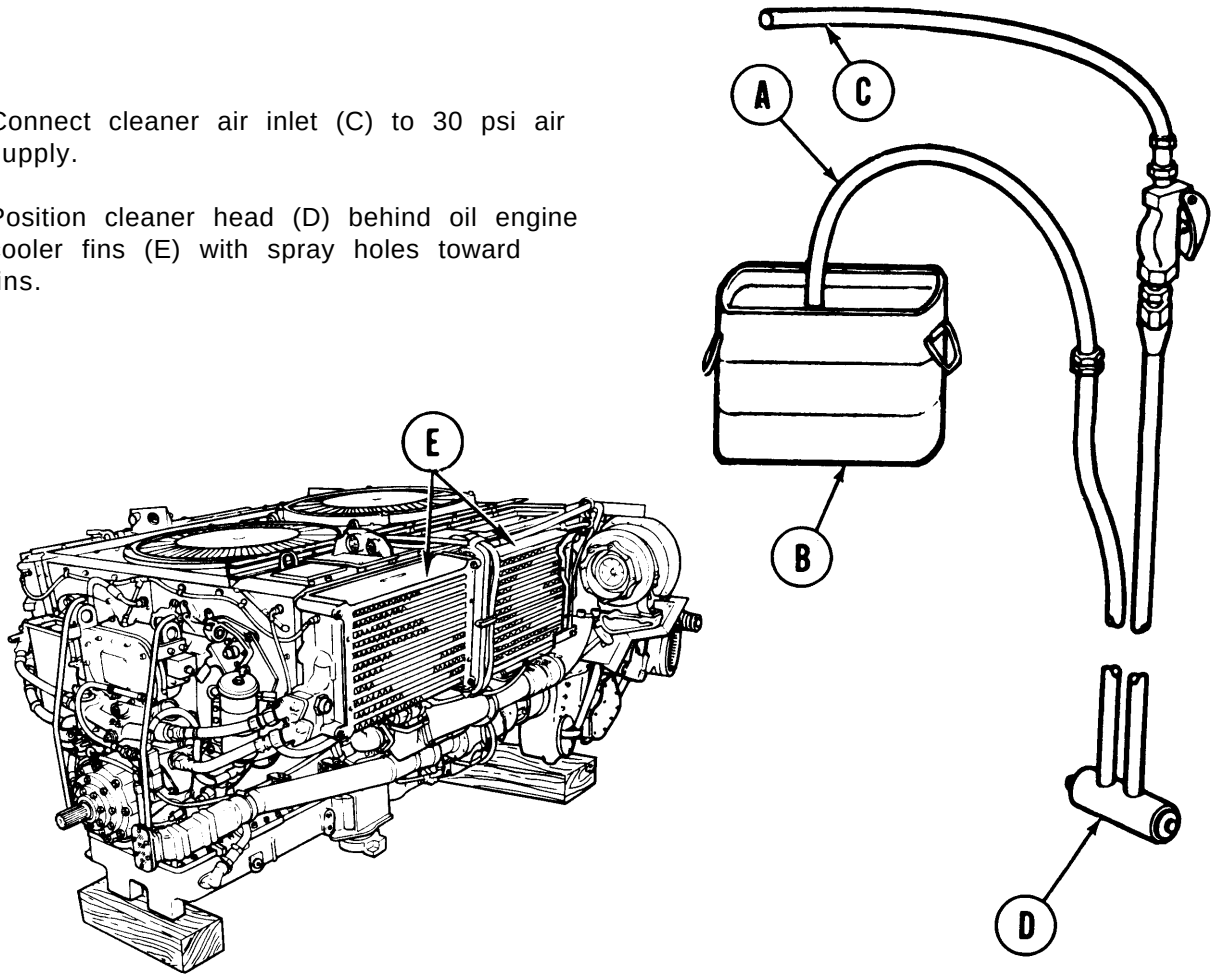

Go on to Sheet 3

TA248041

OIL COOLERS - CLEANING (Sheet 3 of 3)

4. Squeeze lever (F) to obtain an air-liquid mixture and saturate fins (E) with cleaning solution. Allow time for solution to soak between oil cooler fins.

5. Clean oil coolers by alternately moving cleaner head (D) from front to back until cleaning solution flows freely through entire oil cooler area.

6. When oil cooler fins (E) are clean, flush with water.

7. Dry all parts with air by removing end of siphon hose (A) from cleaning solution container (B) and squeezing lever (F).

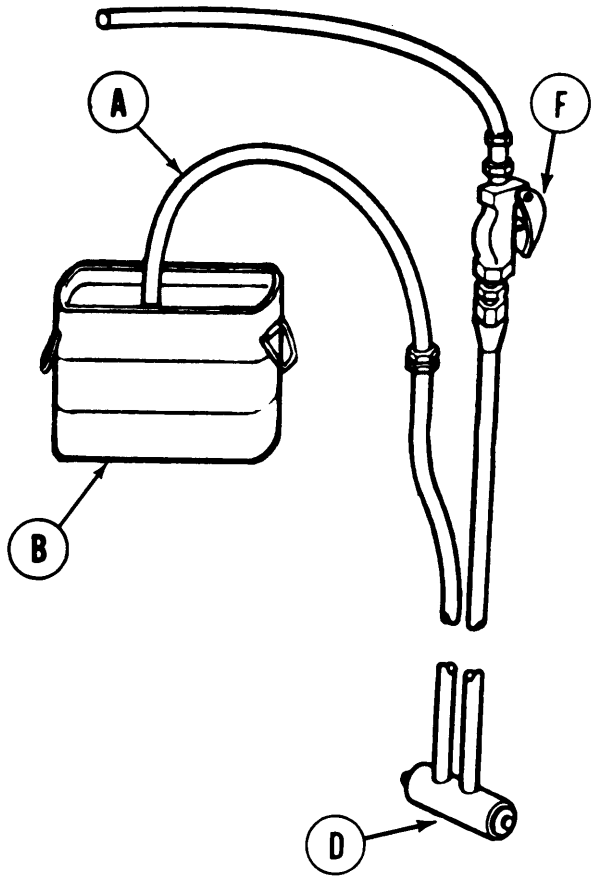

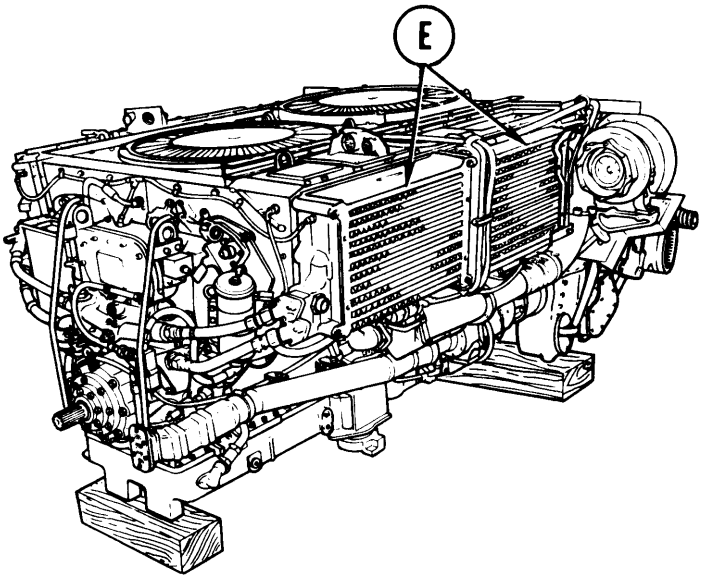

8. Remove engine opening protective coverings.

9. Close hull drains (TM 5-5420-202-10).

10. Replace screens if removed (pages 6-52 and 6-54).

11. Replace upper access cover (page 17-12).

12. Replace engine shroud (page 9-31).

13. Replace top deck frames (page 16-21).

End of Task

TA248042

ENGINE OIL COOLER SCREEN REPLACEMENT (Sheet 1 of 2)

TOOLS: 1/2 in. socket with 1/2 in. drive
Ratchet with 1/2 in. drive
5 in. extension with 1/2 in. drive

PRELIMINARY PROCEDURES: Remove powerplant (page 5-2)

REMOVAL:

1. Using socket with extension through harness and into bracket (A), remove two screws and lockwashers (B).

2. Pull harness and bracket (A) to right side of oil cooler screen for access to screws (c).

3. Using socket, remove four screws and lockwashers (C).

4. Lift away cooler screen.

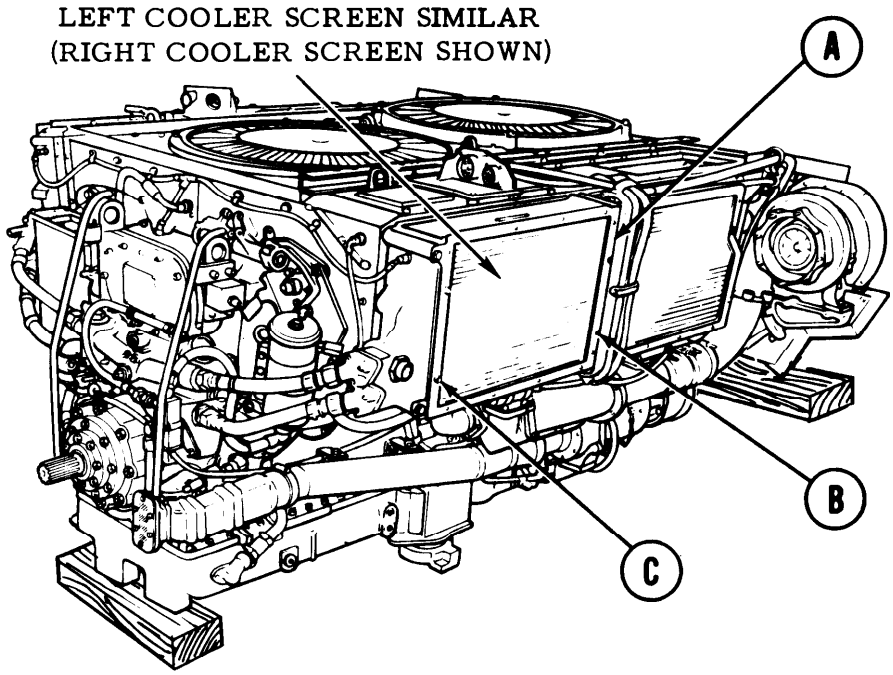

INSPECTION:

1. Check screen and brackets for cracks, tears, bending, and dents.

2. Replace bad parts.

TA248043

Go on to Sheet 2

ENGINE OIL COOLER SCREEN REPLACEMENT (Sheet 2 of 2)

INSTALLATION:

1. Place cooler screen on oil cooler.
2. Start threads of four screws with lockwashers (A) by hand to hold screen in place.
3. Using socket, tighten screws and lockwashers (A).
4. Using socket with extension through harness and into bracket (B), install and tighten two screws and lockwashers (C).
5. Install powerplant (page 5-14).

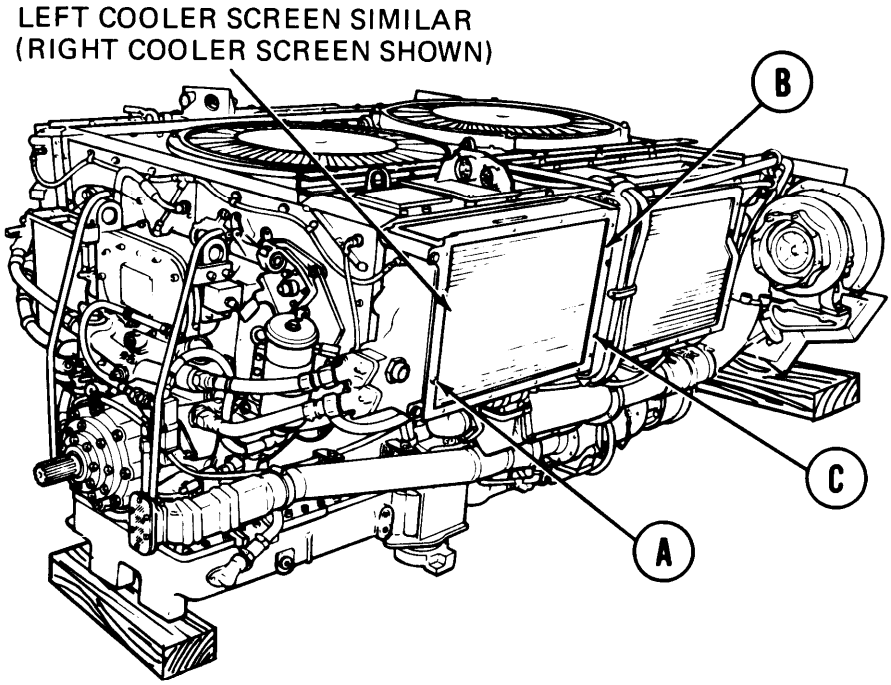

End of Task

TA248044

TRANSMISSION OIL COOLER SCREEN REPLACEMENT (Sheet 1 of 2)

TOOLS: 1/2 in. socket with 1/2 in. drive
5 in. extension with 1/2 in. drive
Ratchet with 1/2 in. drive
1/2 in. combination box and open end wrench
3/4 in. combination box and open end wrench

PRELIMINARY PROCEDURES: Remove both air cleaner outlet hose assemblies (page 7-84)
Remove powerplant (page 5-2)

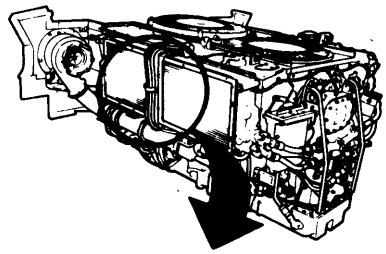

NOTE

Left side-shown, right side similar.

REMOVAL:

NOTE

If removing 2A engine screen, go to step 6.

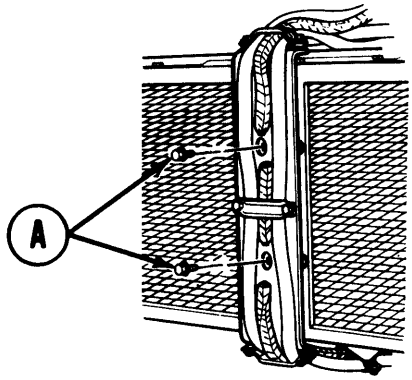

1. Using socket, extension, and ratchet through harness and into bracket, remove two assembled washer screws (A).

NOTE

You will have bracket (B) and tube (C) only if your vehicle is equipped with a 2DA engine.

2. Using socket and 1/2 inch wrench, remove screw (D) and locknut (E) securing clamp (F) and tube (C) to bracket (B).

3. Using 3/4 inch wrench, remove bolt (G).

4. Using socket, remove assembled washer screw (H), screw (J), and washer (K) securing bracket (B) and oil cooler screen (L).

5. Remove bracket (B) and oil cooler screen (L).

6. For 2A engine; using socket, remove four screws (J) and four washers (K) securing oil cooler screen (L). Remove oil cooler screen (L).

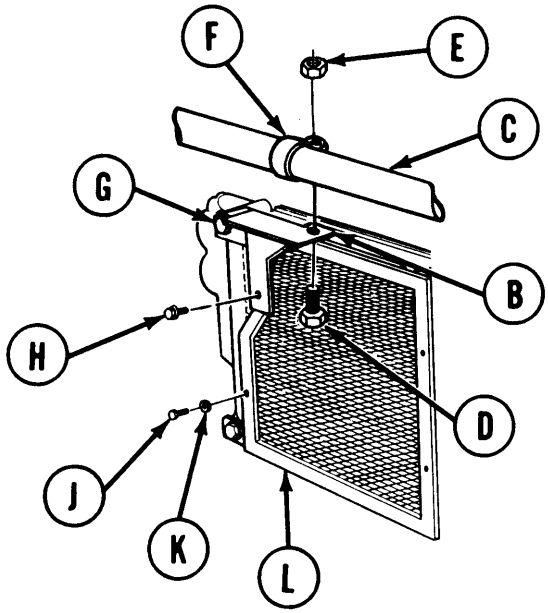

Go on to Sheet 2

TRANSMISSION OIL COOLER SCREEN REPLACEMENT (Sheet 2 of 2)

INSTALLATION:

NOTE

For 2A engine screen, do step 1, 2, 10, and 11.

1. Position oil cooler screen (A) into place on oil cooler.

2. For 2D engine, install screw (B) and washer (C). For 2A engine, use socket to install and tighten four screws (B) and washers (C).

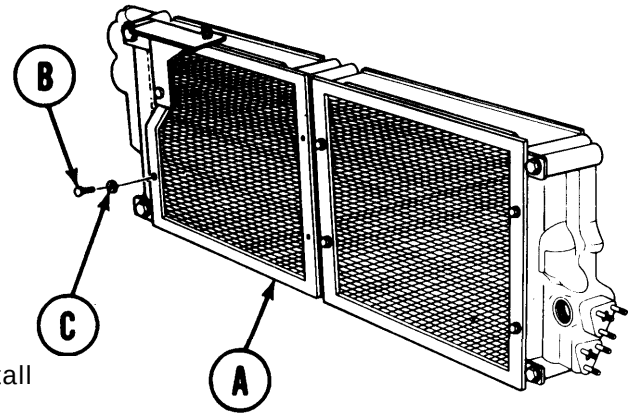

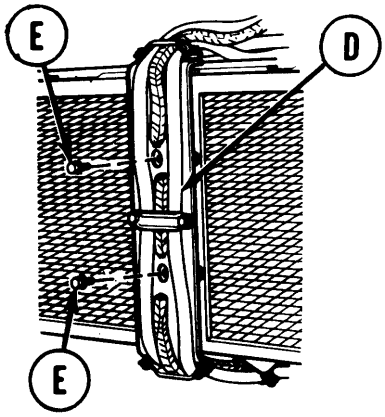

3. Position harness and bracket (D) into place on oil cooler.

4. Using socket, extension, and ratchet through harness and into bracket, install two assembled washer screws (E).

NOTE

You will have bracket (F) and tube (G) only if your vehicle is equipped with a 2DA engine.

5. Position bracket (F) to oil cooler.

6. Install assembled washer screw (H).

7. Using socket, tighten screws (B) and (H).

8. Using 3/4 inch wrench, install bolt (J).

9. Using socket and 1/2 inch wrench, install screw (K) and nut (L) to secure clamp (M) and tube (G) to bracket (F).

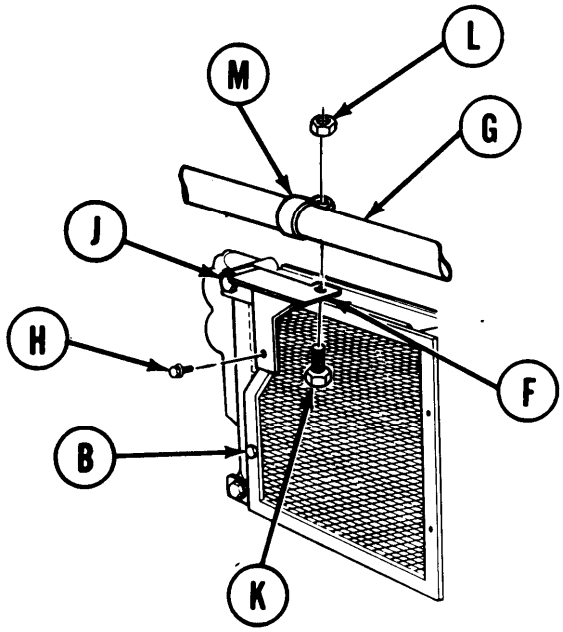

10. Install powerplant (page 5-14).

11. Install both air cleaner outlet hose assemblies (page 7-86).

End of Task

ENGINE OIL COOLER BYPASS VALVE ASSEMBLY REPLACEMENT (Sheet 1 of 2)

TOOLS: 1-1/8 in. open end wrench

SUPPLIES: Gasket

REFERENCE: LO 5-5420-202-12

PRELIMINARY PROCEDURE: Drain engine oil (page 6-12).

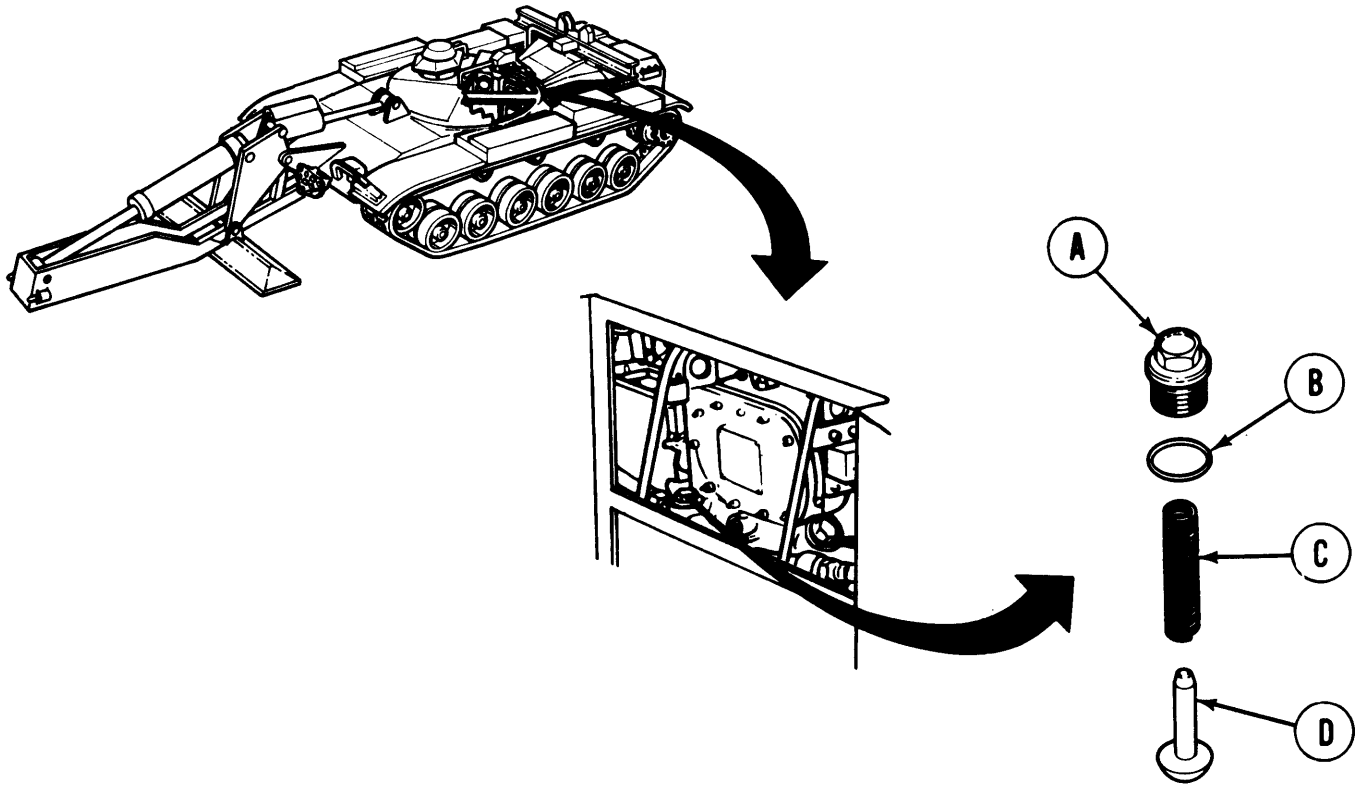

REMOVAL:

1. Using wrench, remove plug (A).
2. Pull gasket (B) from plug (A). Throw gasket (B) away.
3. Lift spring (C) and plunger (D) from hole.

TA248047

Go on to Sheet 2

ENGINE OIL COOLER BYPASS VALVE ASSEMBLY REPLACEMENT (Sheet 2 of 2)

INSTALLATION:

1. Put plunger (A) into hole (B).

2. Put spring (C) onto plunger (A). Make plunger shank aline with inside of spring.

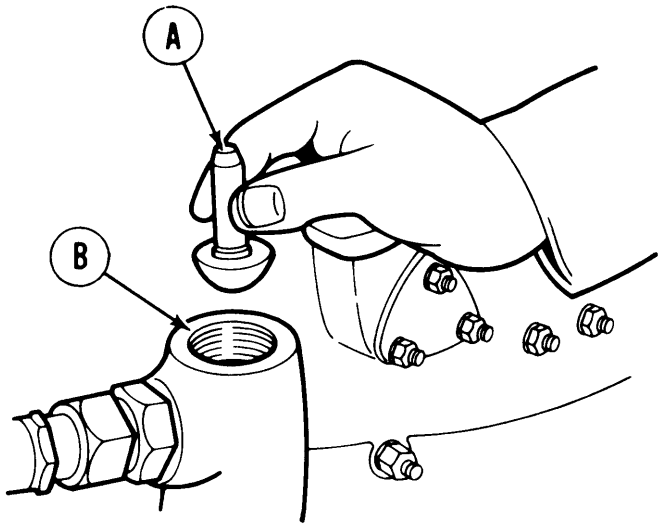

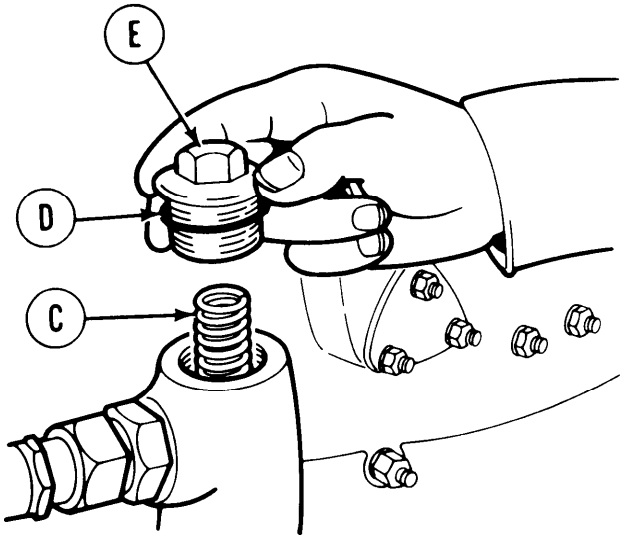

3. Put new gasket (D) on plug (E).

4. Start threads of plug (E) into hole (B) by hand.

5. Using wrench, tighten plug (E).

6. Install engine upper access cover (page 17-12).

7. Replenish engine with new oil (LO 5-5420-202-12).

End of Task

TA248048

ENGINE OIL COOLER FLUID PUMP CONNECTOR REPLACEMENT (Sheet 1 of 4)

PROCEDURE INDEX

PROCEDURE	PAGE
Removal	6-57
Cleaning and Inspection	6-59
Installation	6-59

TOOLS: 9/16 in. combination box and open end wrench
1/2 in. combination box and open end wrench
3/8 in. combination box and open end wrench
1-1/2 in. combination box and open end wrench
3/4 in. combination box and open end wrench
Flat-tip screwdriver
Torque wrench with 3/8 in. drive, 0-200 lb-in (0-22.5 NŽm)
3-4 in. socket with 3/8 in. drive

SPECIAL TOOLS: Ground hop kit (Item 31, Chapter 3, Section 1)

SUPPLIES: Dry cleaning solvent (Item 55, Appendix D)
Rags (Item 65, Appendix D)
Gasket
Washer
Locknuts (3 required)
Lubricating oil (Item 44, Appendix D)
Gloves (Item 69, Appendix D)
Goggles (Item 70, Appendix D)

REFERENCES: LO 5-5420-202-12
TM 5-5420-202-10

PRELIMINARY PROCEDURE: Remove powerplant (page 5-2)

Go on to Sheet 2

ENGINE OIL COOLER FLUID PUMP CONNECTOR REPLACEMENT (Sheet 2 of 4)

REMOVAL:

1. Using 9/16 inch wrench, remove vent capscrew (A) and sealing washer (B).

2. Throw away washer (B).

3. Using 3/4 inch wrench loosen oil drain valve (C) six complete turns.

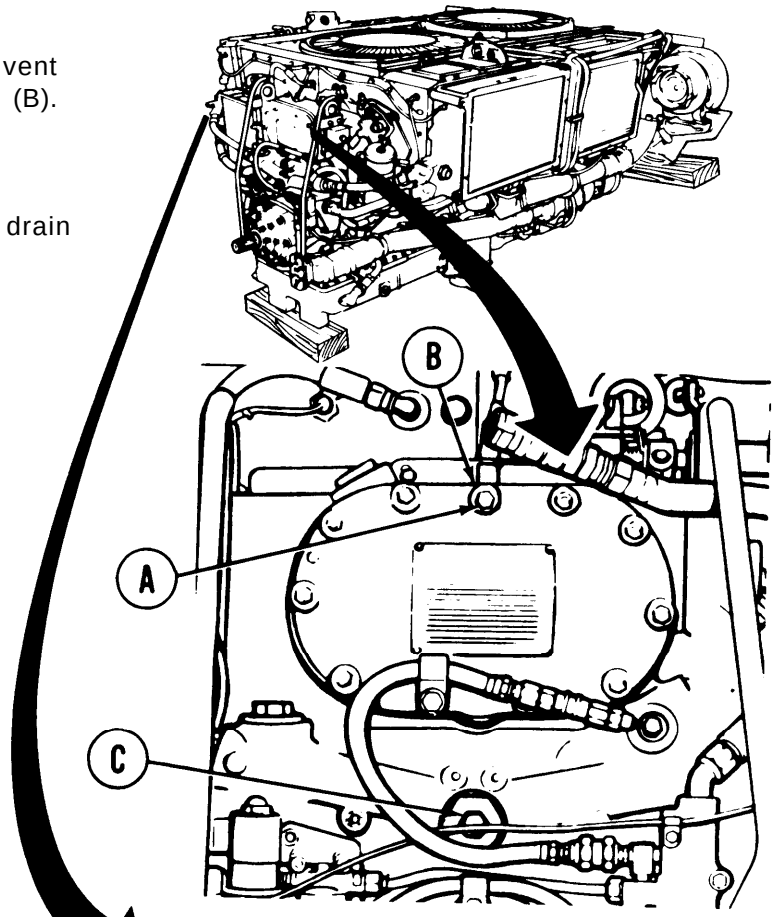

4. Using screwdriver and 3/8 inch wrench, remove clamp (D) on hose (E) if clamp is attached to hose. If clamp (D) is not attached to hose (E), go to step 5.

5. Using 1-1/2 inch wrench remove fitting (F) from connector (G).

6. Using 1-1/2 inch wrench loosen fitting (H) and remove hose (E).

7. Using 1/2 inch wrench, remove three locknuts (J) from connector (G).

8. Discard three locknuts (J).

9. Remove connector (G).

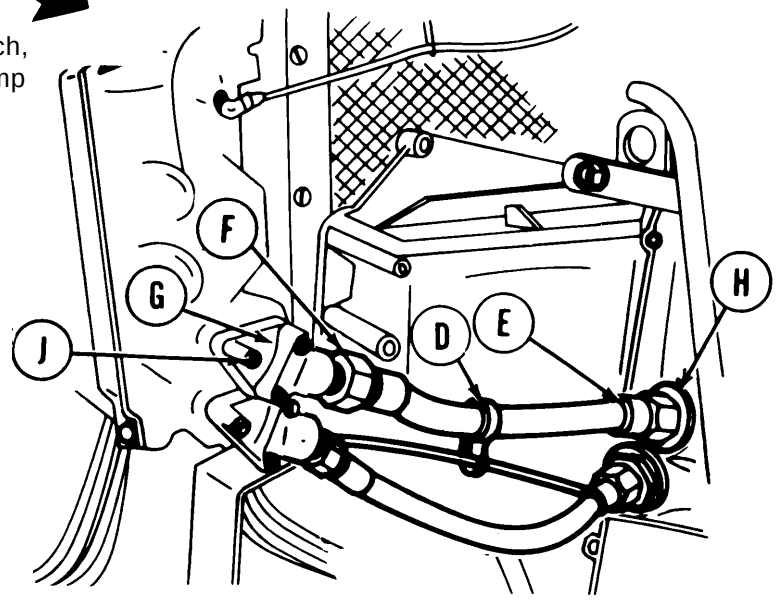

Go on to Sheet 3

TA248050

ENGINE OIL COOLER FLUID PUMP CONNECTOR REPLACEMENT (Sheet 3 of 4)

10. Remove and discard gasket (K) under connector (G).

CLEANING AND INSPECTION:

WARNING

Cleaning agent specified is flammable. Use only in well ventilated areas. Keep away from flames, sparks, or heat. Do not smoke while using. Prevent contact with eyes, mouth, and/or skin. Wear rubber gloves when performing cleaning procedures.

1. Using dry cleaning solvent, clean hose (E) and connector (G).

2. Replace connector (G) if cracked or broken.

3. Inspect threads on hose (E) and connector (G). Replace as required.

4. Replace hose (E) if woven shielding is worn or broken.

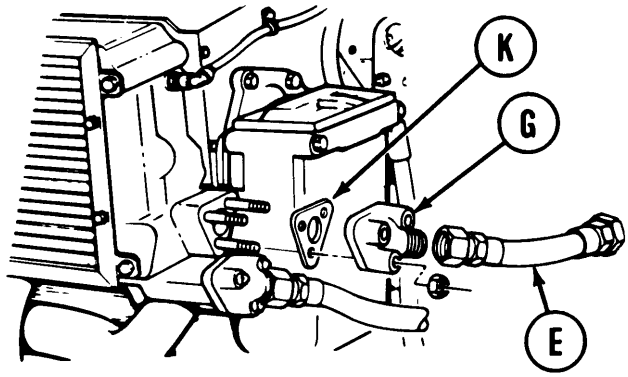

INSTALLATION:

1. Position new gasket (A) on oil cooler (B).

2. Position connector (C) over gasket (A).

3. Using 1/2 inch wrench, install three new locknuts (D).

4. Using 1-1/2 inch wrench install hose (E) to connector (C).

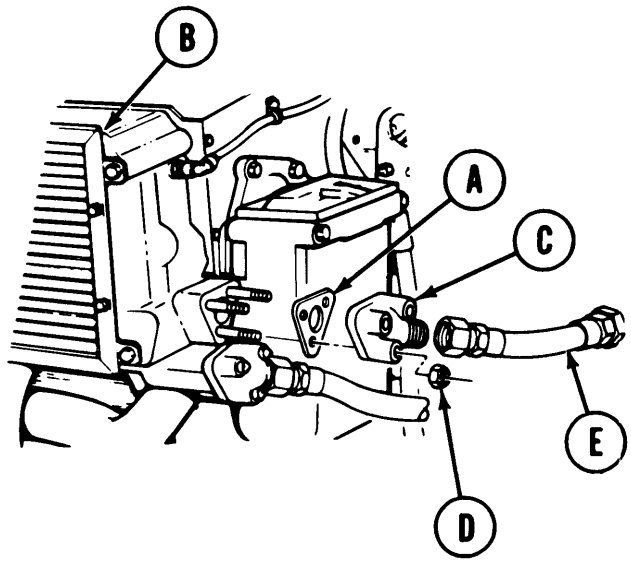

Go on to Sheet 4

TA248051

ENGINE OIL COOLER FLUID PUMP CONNECTOR REPLACEMENT (Sheet 4 of 4)

5. Using 1-1/2 inch wrench, install hose (E) to fitting (F).

6. Using screwdriver and 3/8 inch wrench, install clamp (G) on hose (E) if removed during disassembly.

7. Position new sealing washer (H) over vent hole.

8. Using 9/16 inch wrench install and tighten vent capscrew (J) through washer (H).

9. Using socket and torque wrench, tighten drain valve (K) to a minimum of 150 lb-in. (17 NŽm). Do not overtighten.

10. Perform ground hop (page 5-25). Run engine at idle until oil temperature is in normal operating range (TM 5-5420-202-10).

11. Shut down engine and wait 5 minutes.

12. Check oil level, add oil as required (LO 5-5420-202-12).

13. Disconnect ground hop kit (page 5-40).

14. Install powerplant (page 5-14).

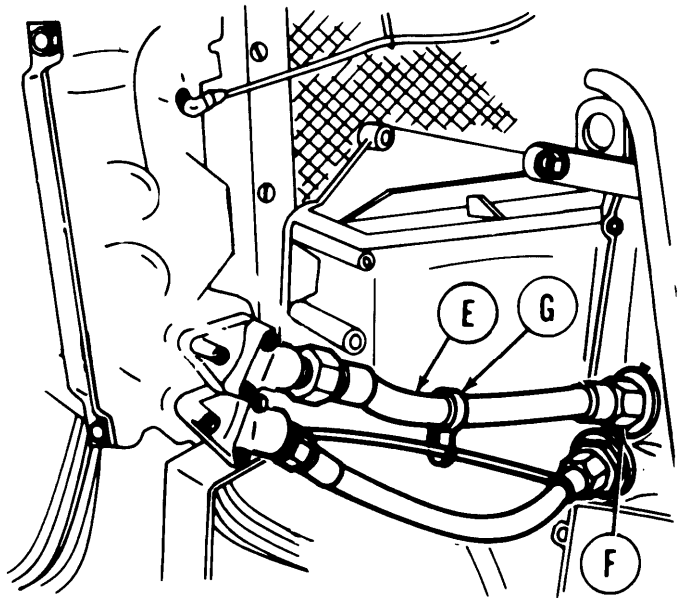

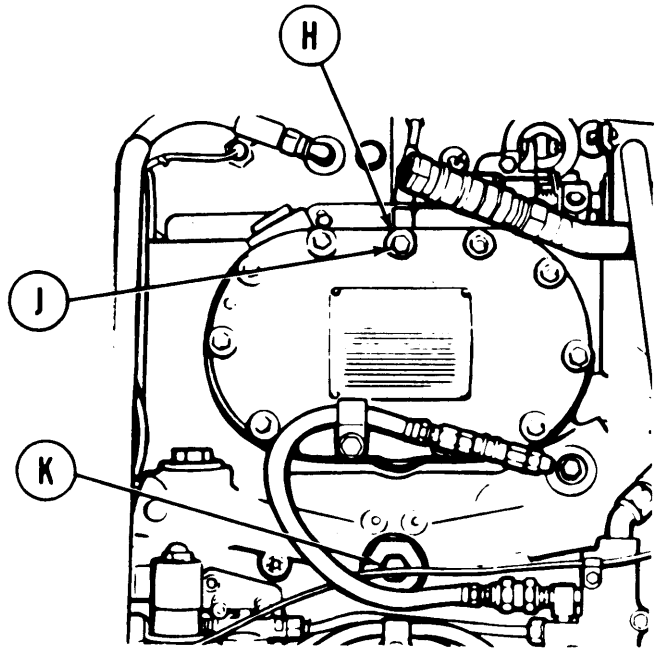

End of Task

TA248052

OIL COOLER VENT HOSES AND FITTINGS REPLACEMENT (Sheet 1 of 3)

TOOLS: 1/2 in. socket with 1/2 in. drive
Ratchet with 1/2 in. drive
9/16 in. combination box and open end wrench
11/16 in. combination box and open end wrench
7/16 in. combination box and open end wrench

SUPPLIES: Packing | (two required)

PRELIMINARY PROCEDURE: Remove powerplant (page 5-2).

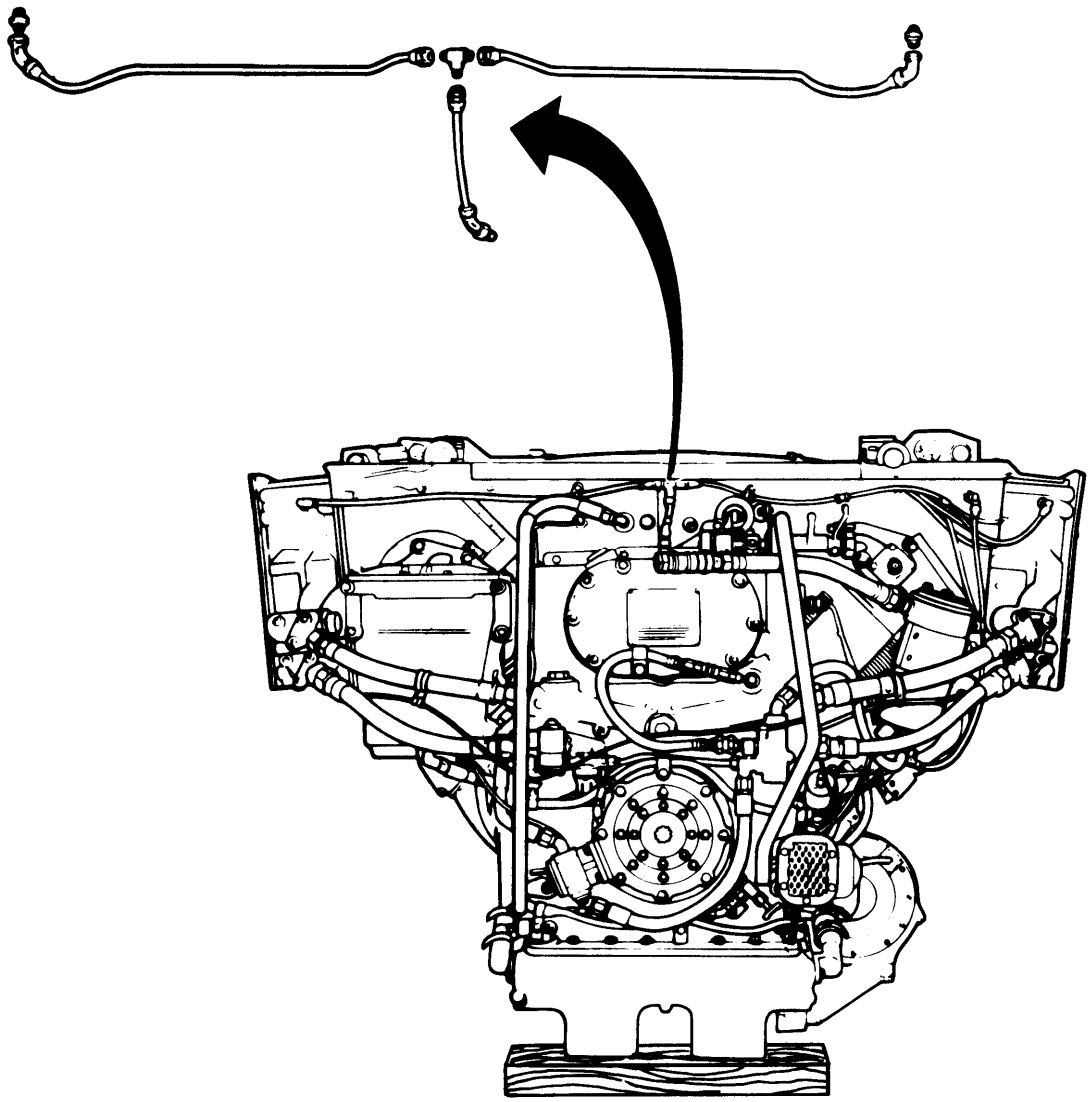

Go on to Sheet 2

TA248053

OIL COOLER VENT HOSES AND FITTINGS REPLACEMENT (Sheet 2 of 3)

1. Using socket, remove four screws (A) holding loop clamps. Remove clamps.
2. Using 9/16 inch wrench, remove hose assembly (B) from adapter (C).
3. Using 9/16 inch wrench, remove hose assembly (B) from tee tube (D).
4. Holding tee tube (D) with 7/16 inch wrench and using 9/16 inch wrench, remove two hose assemblies (E) from tee tube (D).
5. Using 9/16 inch wrench, remove two hose assemblies (E) from two adapters (F).
6. Using 11/ 16 inch wrench, remove two adapters (F) from oil coolers.
7. Using 9/16 inch wrench, remove adapter (C).
8. Remove packing from two adapters (F). Discard packings.

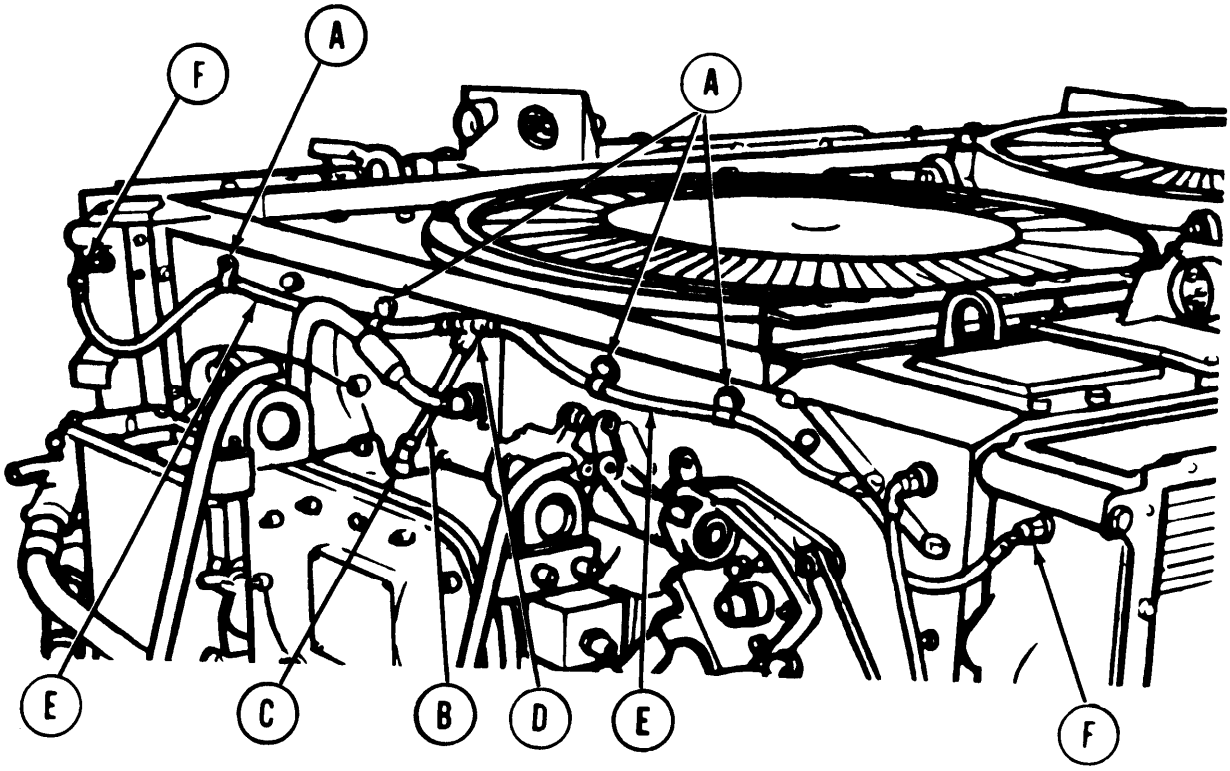

Go on to Sheet 3

TA248054

OIL COOLER VENT HOSES AND FITTINGS REPALCEMENT (Sheet 3 of 3)

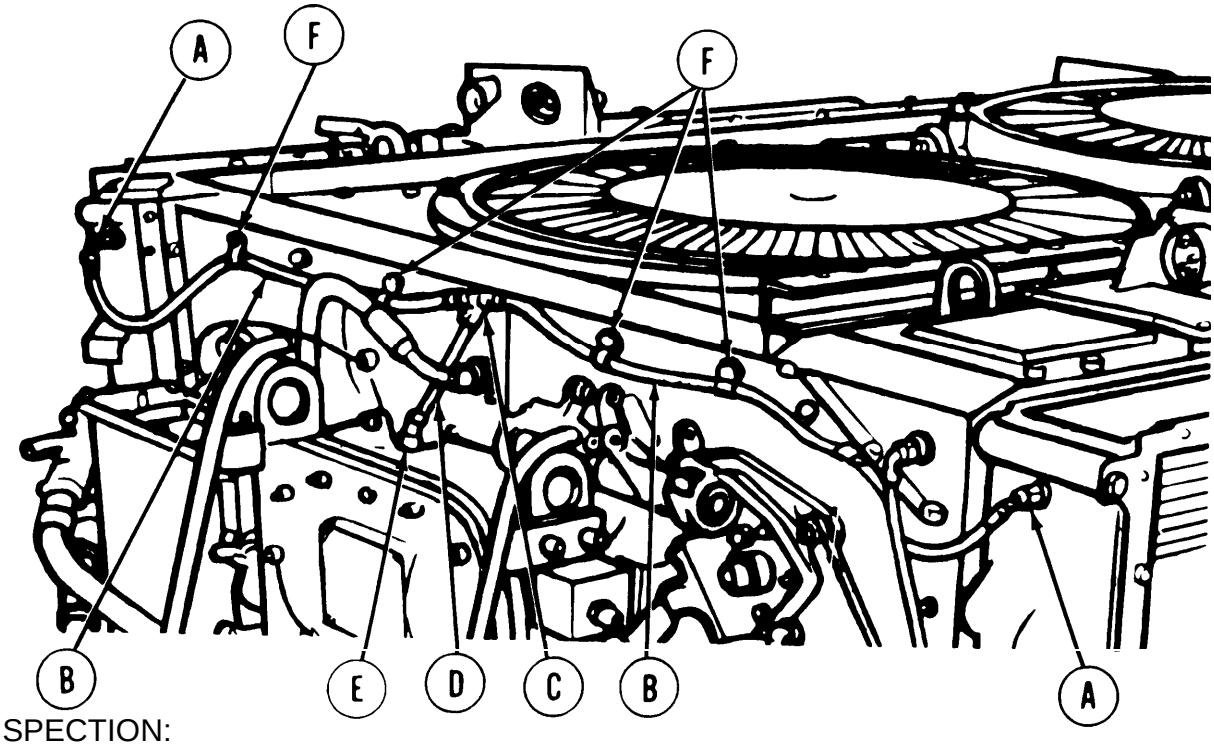

INSPECTION:

1. Check two hoses (B) for frayed covering and damaged threads. Replace damaged hoses.
2. Check fittings for cracks and thread damage. Replace damaged fittings.

INSTALLATION:

1. Install new packing into two adapters (A).
2. Using 11/16 inch wrench, install two adapters (A) into oil coolers.
3. Using 9/16 inch wrench, install adapter (E).
4. Using 9/16 inch wrench, install two hose assemblies (B) to two adapters (A).
5. Holding tee tube (C) with 7/16 inch open end wrench and using 9/16 inch wrench, install two hose assemblies (B) to tee tube (C).
6. Using 9/16 inch wrench, install hose assembly (D) to tee tube (C).
7. Using 9/16 inch wrench, install hose assembly (D) to adapter (E).
8. Using hands, install four clamps on hose assemblies (B).
9. Using socket, install four screws (F) holding loop clamps.
10. Install powerplant (page 5-14).

End of Task

TA248055

RIGHT OUTER AND INNER ENGINE TO TRANSMISSION OIL LINE TUBE ASSEMBLIES REPLACEMENT (Sheet 1 of 4)

PROCEDURE INDEX

PROCEDURE	PAGE
Removal	6-64
Installation	6-66

TOOLS: 1-1/2 in. open end wrench
1-5/8 in. open end wrench
1-5/8 in. socket with 3/4 in. drive
Torque wrench with 1/2 in. drive (0-175 lb-ft) (0-237 NŽm)
Adapter 1/2 in. to 3/4 in.

SPECIAL TOOLS: Ground hop kit (Item 31, Chapter 3, Section 1)

SUPPLIES: Drip pan
Masking tape 1/2 in. (Item 58, Appendix D)
Plastic barrier material (Item 42, Appendix D)
Rags (Item 65, Appendix D)
Lubricating oil (Item 44, Appendix D)
Gaskets (4 required)

REFERENCE: LO 5-5420-202-12

PRELIMINARY PROCEDURES: Remove powerplant (page 5-2).
Remove engine shroud (page 9-30)
Remove rear engine shroud support (page 9-39)

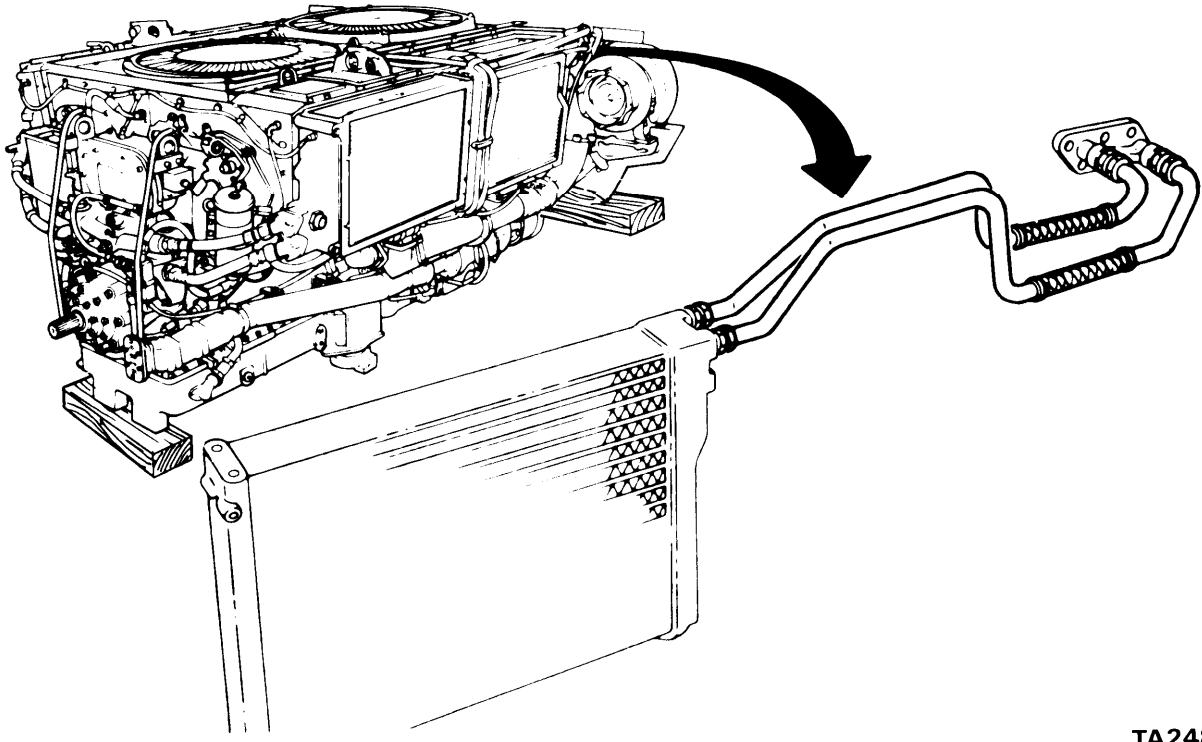

TA248056

Go on to Sheet 2

RIGHT OUTER AND INNER ENGINE TO TRANSMISSION OIL LINE TUBE ASSEMBLIES REPLACEMENT (Sheet 2 of 4)

NOTE

Place rags or drip pan under transmission and oil cooler adapters. Before removing tubes and fittings, seal powerplant openings with plastic barrier material and masking tape to prevent unnecessary exposure to moisture and contamination. Remove plastic barrier material and masking tape when installing tubes and fittings.

REMOVAL:

1. Using 1-5/8 inch wrench to hold adapter (A), use 1-1/2 inch wrench and loosen connector (B).

2. Using 1-5/8 inch wrench to hold adapter (C), use 1-1/2 inch wrench and loosen connector (D).

3. Using hands, disconnect and remove tube (E) from powerplant.

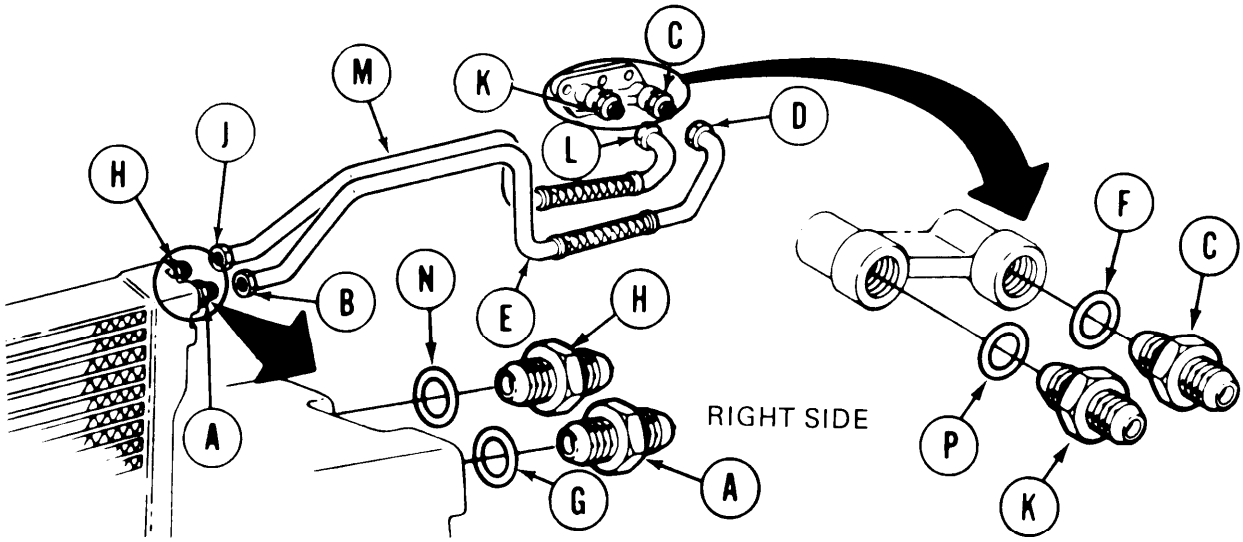

4. Using 1-5/8 inch wrench, remove adapters (A and C) and gaskets (F and G). Throw gaskets away.

5. Using 1-5/8 inch wrench to hold adapter (H), use 1-1/2 inch wrench and loosen connector (J).

6. Using 1-5/8 inch wrench to hold adapter (K), use 1-1/2 inch wrench and loosen connector (L).

7. Using hands disconnect and remove tube (M) from powerplant.

8. Using 1-5/8 inch wrench, remove adapters (H and K) and gaskets (N and P). Throw gaskets away.

Go on to Sheet 3

TA248057

RIGHT OUTER AND INNER ENGINE TO TRANSMISSION OIL LINE TUBE ASSEMBLIES REPLACEMENT (Sheet 3 of 4)

INSTALLATION:

1. Position new gaskets (A and B) on adapters (C and D).
2. Using hands, install adapters (C and D) in oil cooler (E).
3. Position new gaskets (F and G) on adapters (H and J).
4. Using hands, install adapters (H and J) in transmission mount (K).
5. Using torque wrench, adapter, and socket, tighten adapters (C, D, H, and J) to 50 ft-lb (68 NŽm).

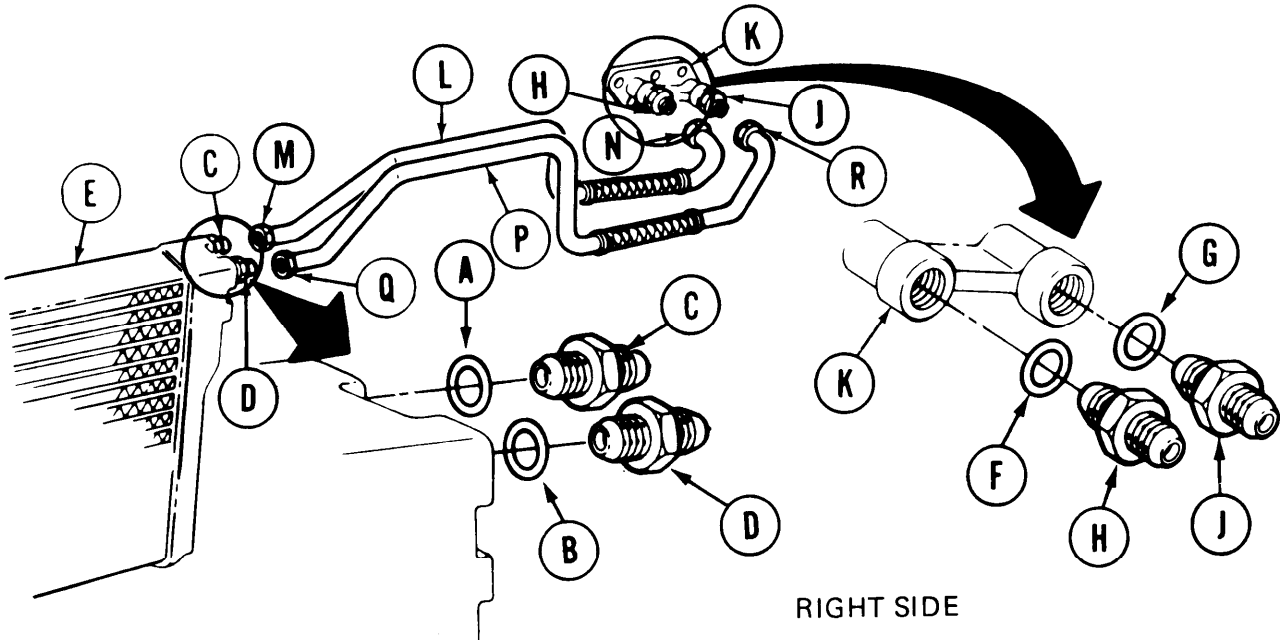

6. Position tube (L) through engine shroud. Using hands, install tube nut (M) to adapter (C) and tube nut (N) to adapter (H).
7. Using 1-5/8 in. wrench to hold adapter (C), tighten tube nut (M) using 1-1/2 in. wrench. Repeat to tighten tube nut (N) to adapter (H).
8. Position tube (P) through engine shroud. Using hands, install tube nut (Q) to adapter (D) and tube nut (R) to adapter (J).
9. Using 1-5/8 in. wrench to hold adapter (D), tighten tube nut (Q) to adapter (D). Repeat to tighten tube nut (R) to adapter (J).

Go on to Sheet 4

RIGHT OUTER AND INNER ENGINE TO TRANSMISSION OIL LINE TUBE ASSEMBLIES REPLACEMENT (Sheet 4 of 4)

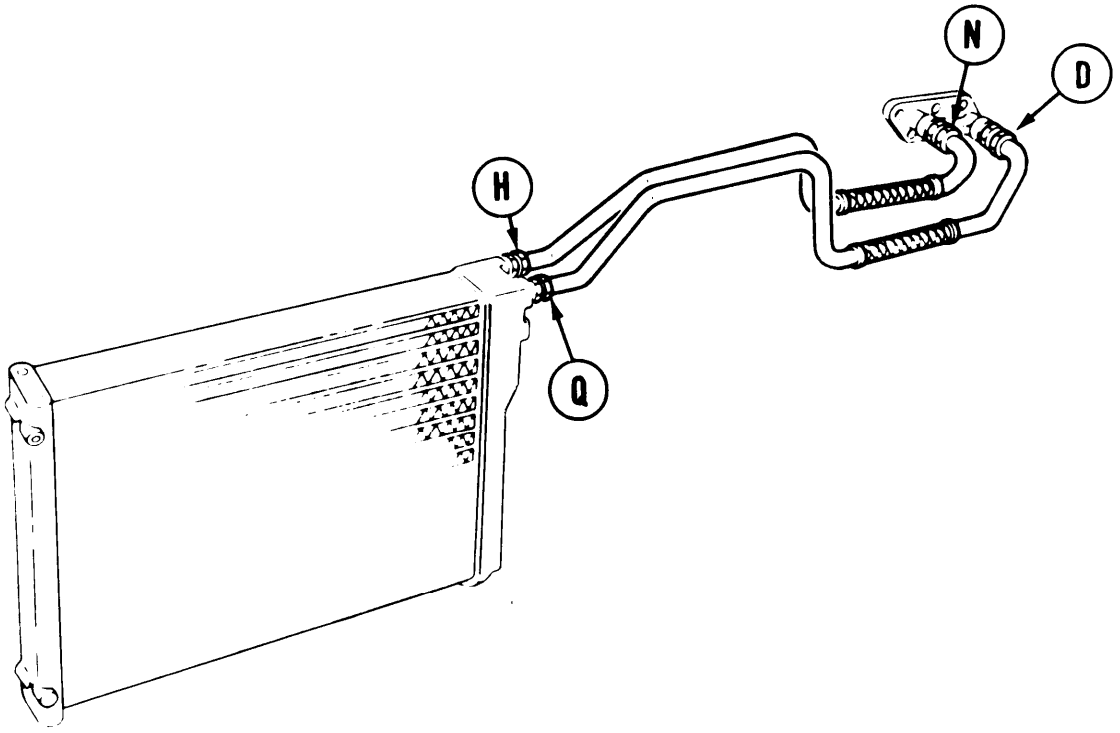

11. Remove rags or drip pan placed under transmission connectors (N and D) and oil cooler connectors (H and Q).

12. Replenish oil lost during oil line tube assembly's removal. (LO 5-5420-202-12).

13. Connect powerplant for powerplant ground hop (page 5-25).

14. Start and run engine. Check for oil leaks at oil cooler and transmission oil line tube assembly connections.

15. Shut down engine. Disconnect powerplant from ground hop (page 5-40).

16. Install engine shroud (page 9-31).

17. Install rear engine shroud support (page 9-40).

18. Install powerplant (page 5-14).

End of Task

TA248059

LEFT OUTER AND INNER ENGINE-TO-TRANSMISSION OIL LINE TUBE ASSEMBLIES REPLACEMENT (Sheet 1 of 4)

PROCEDURE INDEX

PROCEDURE	PAGE
Removal	6-68
Installation	6-70

TOOLS: 1-1/2 in. open end wrench
1-5/8 in. open end wrench

SPECIAL TOOLS: Ground hop kit (Item 31, Chapter 3, Section 1)

SUPPLIES: Drip pan
Masking tape 1/2 in. (Item 58, Appendix D)
Plastic barrier material (Item 42, Appendix D)
Rags (Item 65, Appendix D)
Lubricating oil (Item 44, Appendix D)
Gaskets (4 required)

REFERENCE: LO 5-5420-202-12

PRELIMINARY PROCEDURES: Remove powerplant (page 5-2)
Remove engine shroud (page 9-30)
Remove rear engine shroud support (page 9-39)

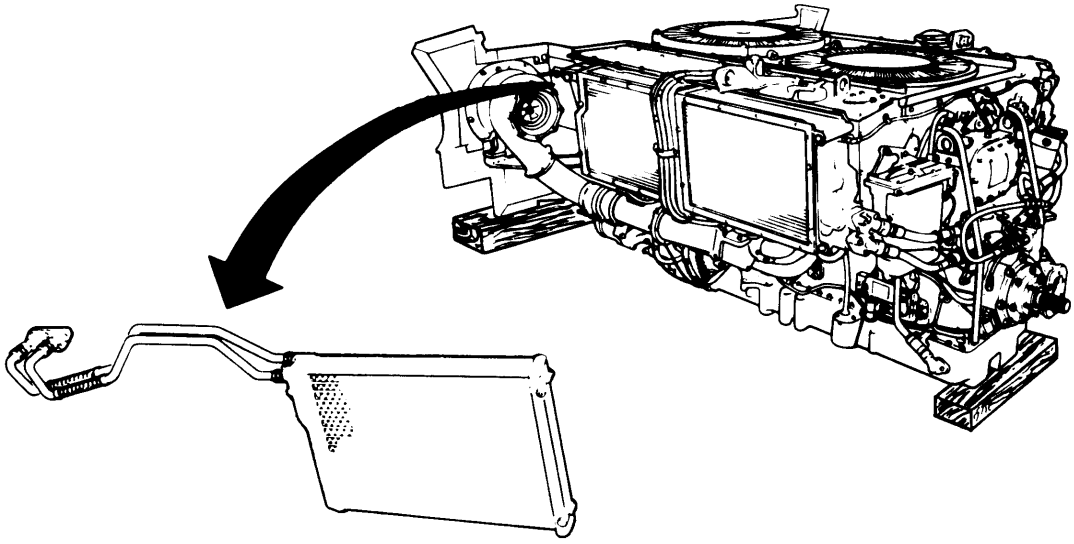

Go on to Sheet 2

TA248060

LEFT OUTER AND INNER ENGINE-TO-TRANSMISSION OIL LINE TUBE ASSEMBLIES REPLACEMENT (Sheet 2 of 4)

NOTE

Place rags or drip pan under fittings (H & A and K & C). Before removing tubes and fittings, seal powerplant openings with plastic barrier material and masking tape to prevent unnecessary exposure to moisture and contamination. Remove plastic barrier material and masking tape when installing tubes and fittings.

REMOVAL:

1. Using 1-5/8 inch wrench to hold adapter (A), use 1-1/2 inch wrench and loosen connector (B).

2. Using 1-5/8 inch wrench to hold adapter (C), use 1-1/2 inch wrench and loosen connector (D).

3. Using hands disconnect and remove tube (E) from powerplant.

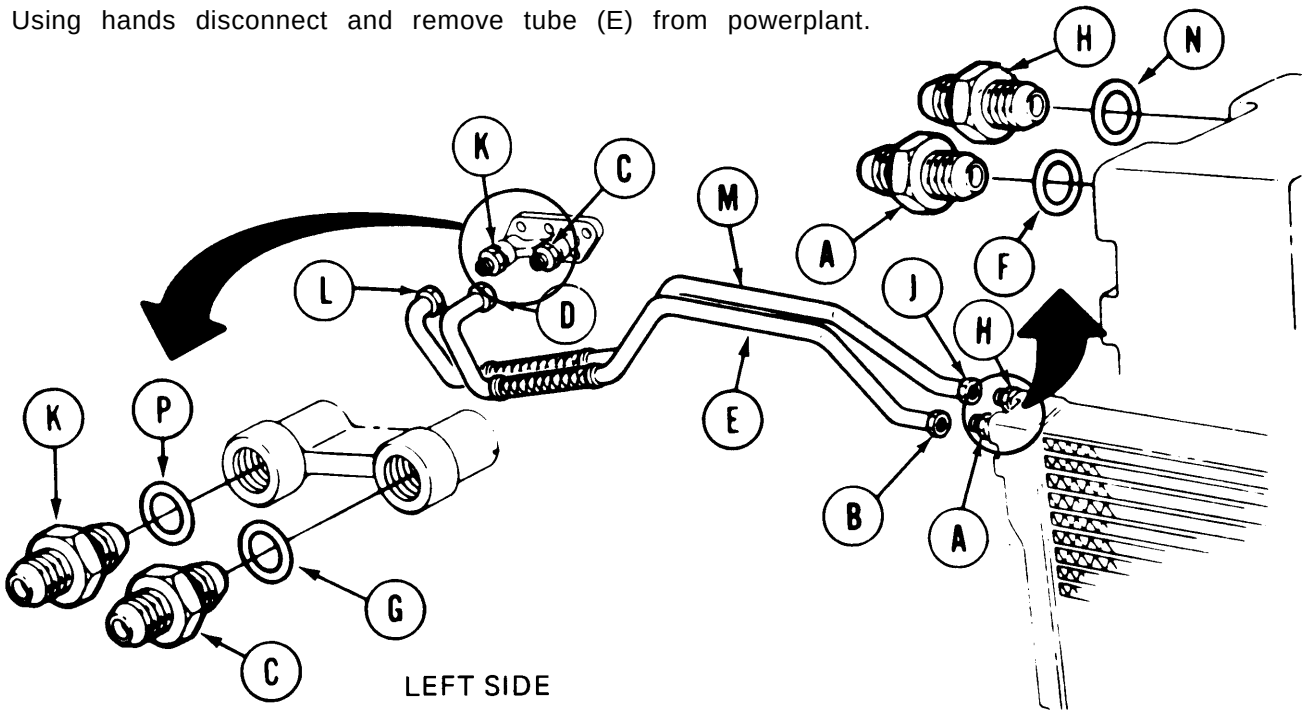

4. Using 1-5/8 inch wrench, remove adapters (A and C) and gaskets (F and G). Throw gaskets away.

5. Using 1-5/8 inch wrench to hold adapter (H), use 1-1/2 inch wrench and loosen connector (J).

6. Using 1-5/8 inch wrench to hold adapter (K), use 1-1/2 inch wrench and loosen connector (L).

7. Using hands disconnect and remove tube (M) from powerplant.

8. Using 1-5/8 inch wrench, remove adapters (H and K) and gaskets (N and P). Throw gaskets away.

Go on to Sheet 3

TA248061

LEFT OUTER AND INNER ENGINE-TO-TRANSMISSION OIL LINE TUBE ASSEMBLIES REPLACEMENT (Sheet 3 of 4)

INSTALLATION:

1. Position new gaskets (A and B) onto adapters (C and D).
2. Using 1-5/8 inch wrench, install and tighten adapter (C) into oil cooler (E).
3. Using 1-5/8 inch wrench, install and tighten adapter (D) into transmission mount (F).
4. Position tube (G) through engine shroud and using 1-1/2 inch wrench on connector (H), install and tighten connector (H) onto adapter (C).
5. Using 1-1/2 inch wrench on connector (J), install and tighten connector (J) onto adapter (D).
6. Position new gaskets (K and L) onto adapters (M and N).
7. Using 1-5/8 inch wrench, install and tighten adapter (M) into oil cooler (E).

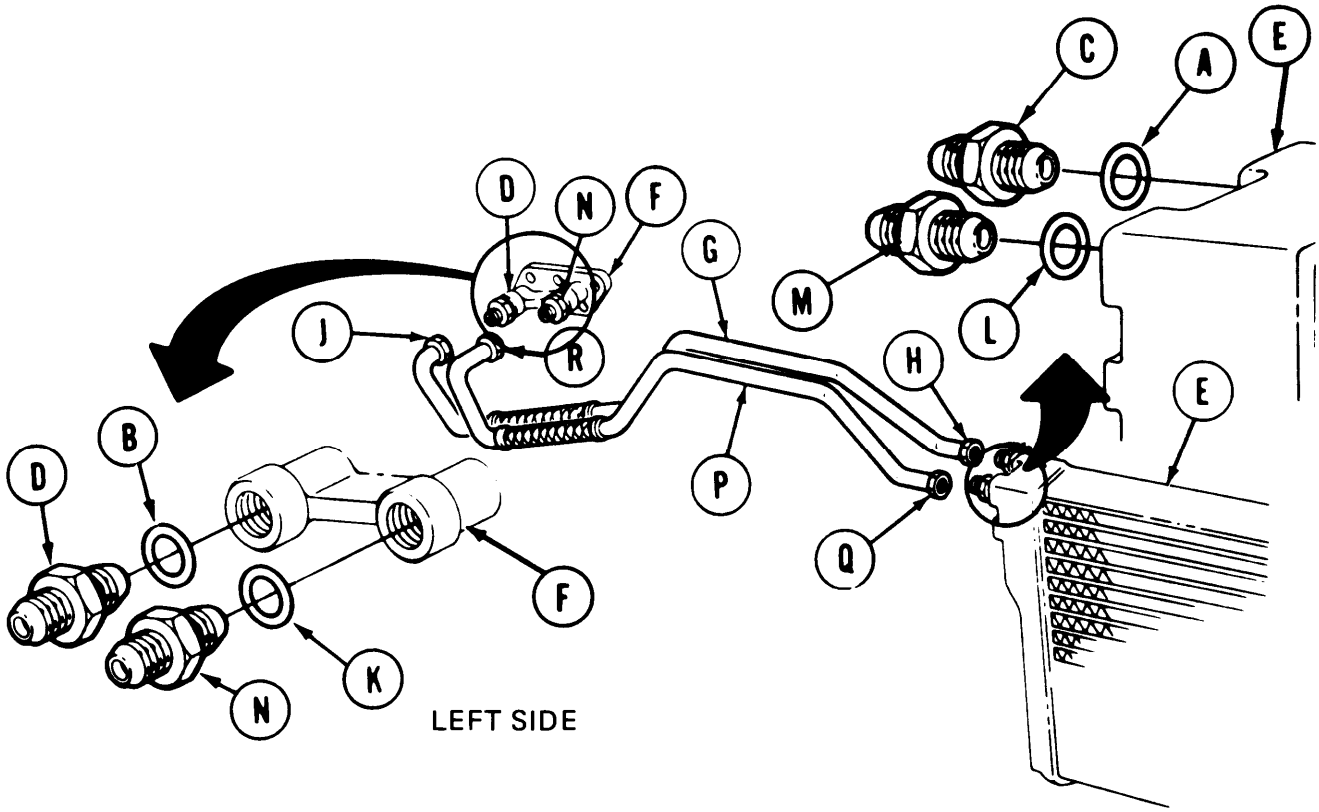

8. Using 1-5/8 inch wrench, install and tighten adapter (N) into transmission mount (F).
9. Position tube (P) through engine shroud and using 1-1/2 inch wrench on connector (Q), install and tighten connector (Q) onto adapter (M).
10. Using 1-1/2 inch wrench on connector (R), install and tighten connector (R) onto adapter (N).

Go on to Sheet 4

TA248062

LEFT OUTER AND INNER ENGINE-TO-TRANSMISSION OIL LINE TUBE ASSEMBLIES REPLACEMENT (Sheet 4 of 4)

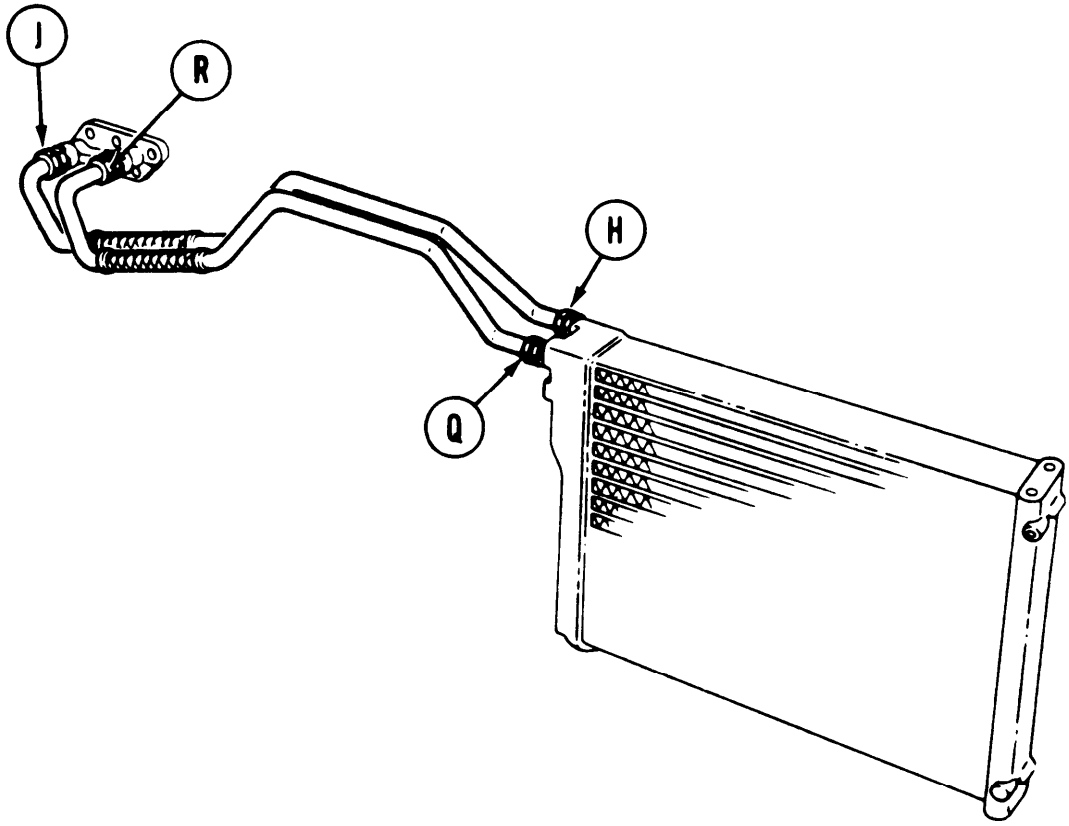

11. Remove rags or drip pan placed under transmission connector (J and R) and oil cooler connectors (H and Q).

12. Replenish oil lost during oil line tube assembly's removal (LO 5-5420-202-12).

13. Connect powerplant for powerplant ground hop (page 5-25).

14. Start and run engine. Check for oil leaks at oil cooler and transmission oil line tube assembly connections.

15. Shut down engine. Disconnect powerplant from ground hop (page 5-40).

16. Install engine shroud (page 9-31).

17. Install rear engine shroud support (page 9-40).

18. Install powerplant (page 5-14).

End of Task

TA248063

OIL DAMPER HOUSING STRAIGHT TUBE HOSE ADAPTER REPLACEMENT (Sheet 1 of 4)

PROCEDURE INDEX

PROCEDURE	PAGE
Removal	6-72
Installation	6-74

TOOLS: Ratchet with 1/2 in. drive .
9/16 in. socket with 1/2 in. drive
3/4 in. combination box and open end wrench
1-1/2 in. combination box and open end wrench
1-9/ 16 in. combination box and open end wrench
Torque wrench with 3/8 in. drive, 0-200 lb-in (0-23 NŽm)
3/4 in. socket with 3/8 in. drive

SUPPLIES: Drip pan
Spacer ring
Washer
Rags (Item 65, Appendix D)
Lubricating oil (Item 44, Appendix D)

SPECIAL TOOLS: 3/4 in. crowfoot wrench with 3/8 in. drive

REFERENCES: TM 5-5420-202-10
LO 5-5420-202-12

PRELIMINARY PROCEDURES: Remove engine upper access cover (page 17-1 1)

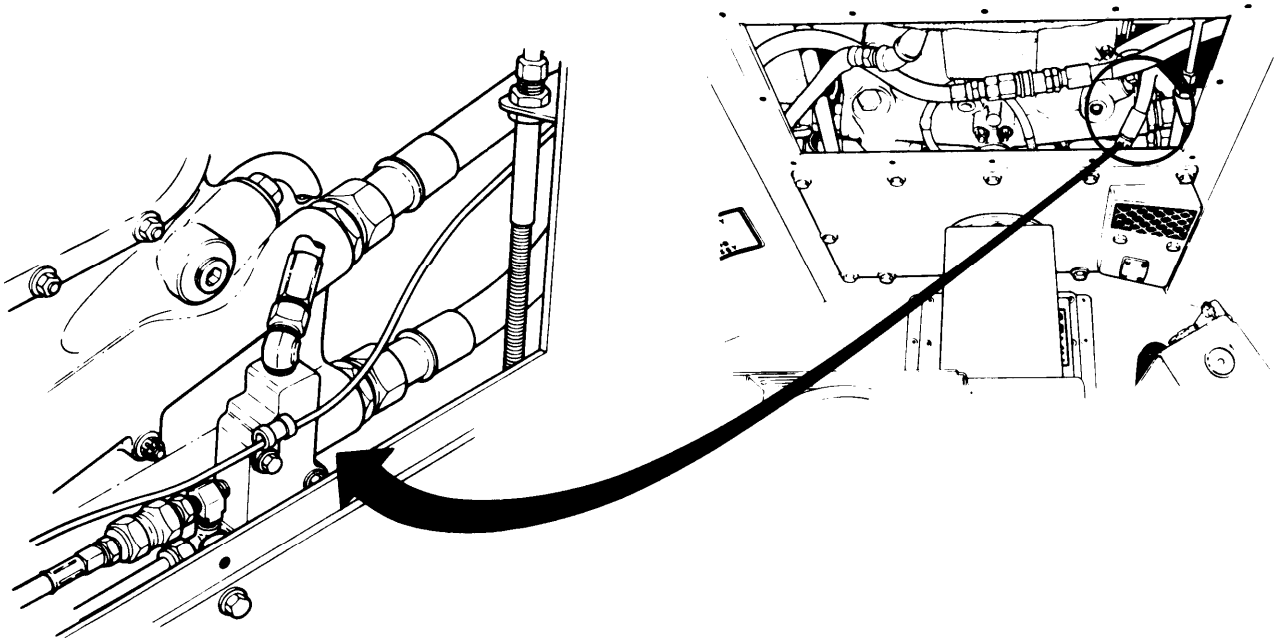

Go on to Sheet 2

TA248064

AIR CLEANER INTAKE ELBOW REPLACEMENT (Sheet 3 of 3)

INSTALLATION:

1. Position new gasket (A) onto studs of air cleaner.
2. Install elbow (B) onto studs of air cleaner.
3. Install 10 self-locking nuts (C) onto studs to secure elbow (B) to air cleaner.

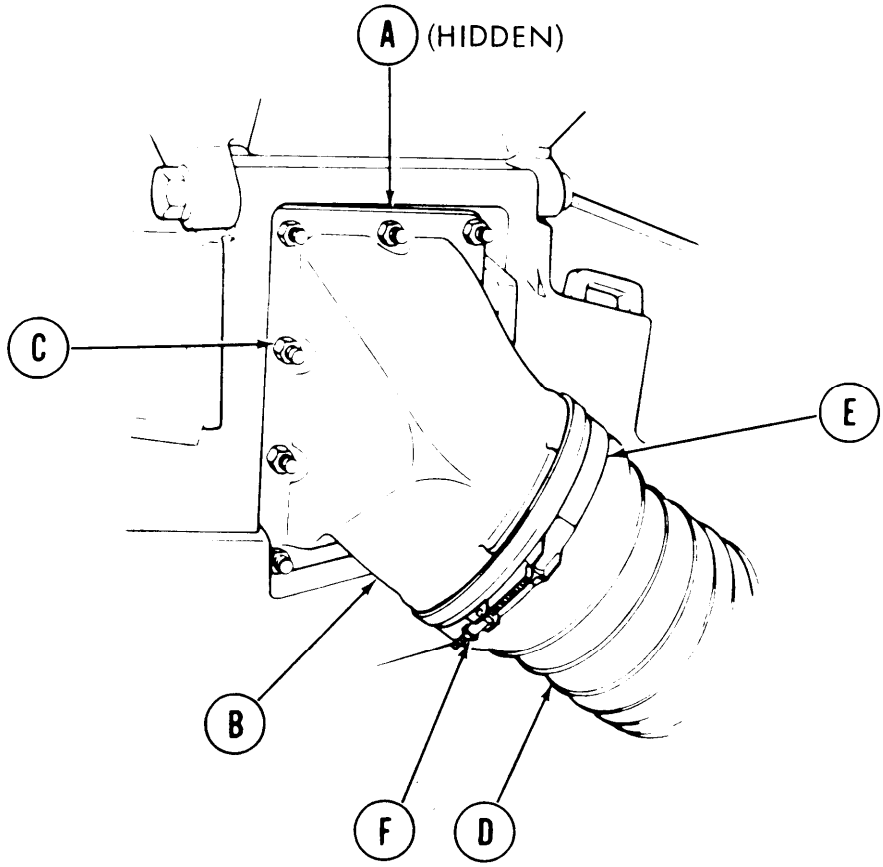

4. Using 9/16 inch socket, universal joint, extension, and 9/16 inch wrench, as necessary, tighten 10 nuts (C).
5. Install hose (D) onto elbow (B).
6. Slide clamp (E) up over hose (D) and onto elbow (B).
7. Using 3/8 inch wrench, tighten clamp nut (F) to secure clamp (E).
8. Close top grille doors (TM 5-5420-202-10).

End of Task

TA248197

AIR CLEANER TURBOCHARGER ELBOW REPLACEMENT (Sheet 1 of 3)

TOOLS: 1/2 in. combination box and open end wrench
1/2 in. socket with 1/2 in. drive
10 in. extension with 1/2 in. drive
Ratchet with 1/2 in. drive
Flat-tip screwdriver

SUPPLIES: Gasket
Lockwashers (8 required)

REFERENCE: TM 5-5420-202-10

PRELIMINARY PROCEDURE: Open top grille doors (TM 5-5420-202-10)

NOTE

Removal of left or right turbocharger elbow is the same. Left side shown.

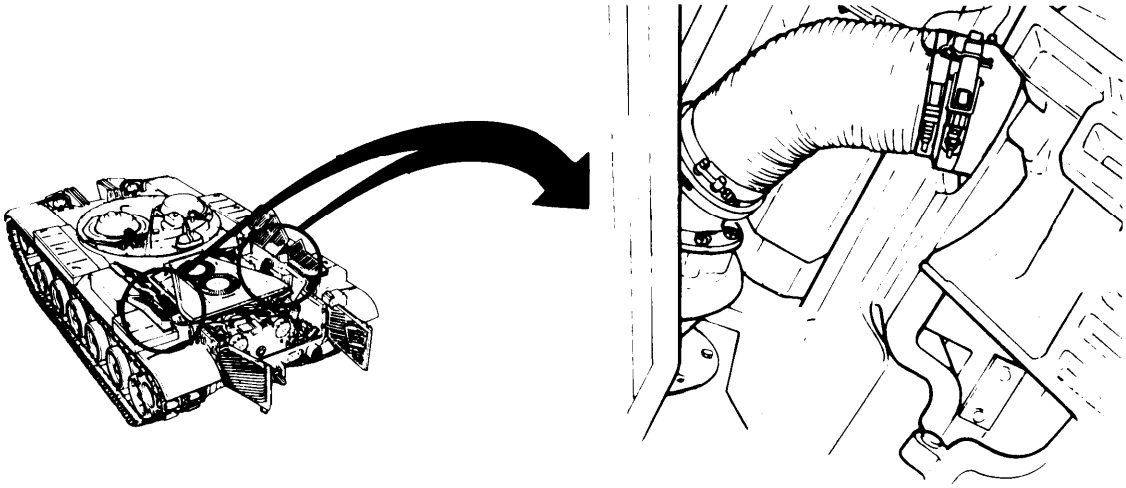

Go on to Sheet 2

AIR CLEANER TURBOCHARGER ELBOW REPLACEMENT (Sheet 2 of 3)

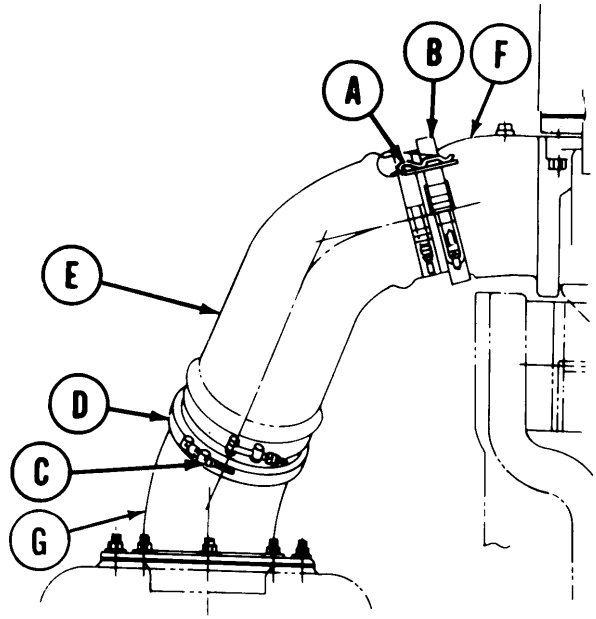

REMOVAL:

1. Pull pin (A) and release quick release clamp (B).
2. Remove quick release clamp (B) from hose and elbow.
3. Using socket, loosen nut (C) securing clamp (D).
4. Remove hose assembly (E).
5. Remove clamp (D).
6. Cover air cleaner outlet elbow (F) and turbosupercharger inlet elbow (G) with rags to prevent entrance of foreign matter.

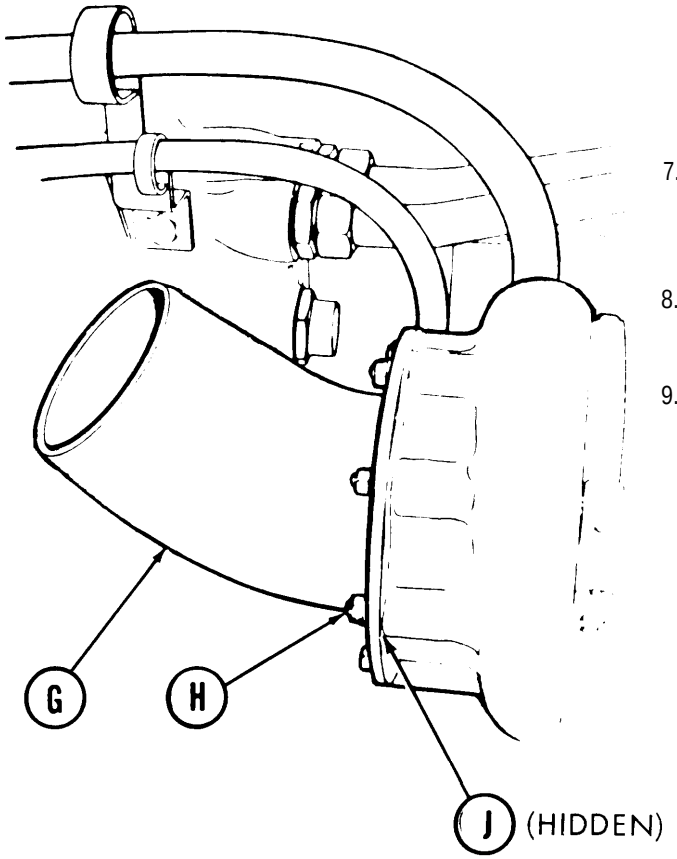

7. Using socket with extension and wrench, remove eight nuts, lockwashers, and flat washers (H) securing elbow (G) to turbocharger.
8. Remove elbow (G) and gasket (J). Throw gasket (J) away.
9. Make sure turbocharger inlet mating surface is not nicked, burred, or damaged. If turbocharger inlet mating surface is damaged, notify support maintenance. Make sure eight nuts and studs are not stripped or damaged. Repair as necessary.

AIR CLEANER TURBOCHARGER ELBOW REPLACEMENT (Sheet 3 of 3)

INSTALLATION:

1. Position new gasket (A) onto studs of turbocharger.

2. Position elbow (B) onto studs of turbocharger.

3. Install eight flat washers, lock-washers, and nuts (C) onto studs to secure elbow.

4. Using socket with extension and wrench, tighten nuts (C).

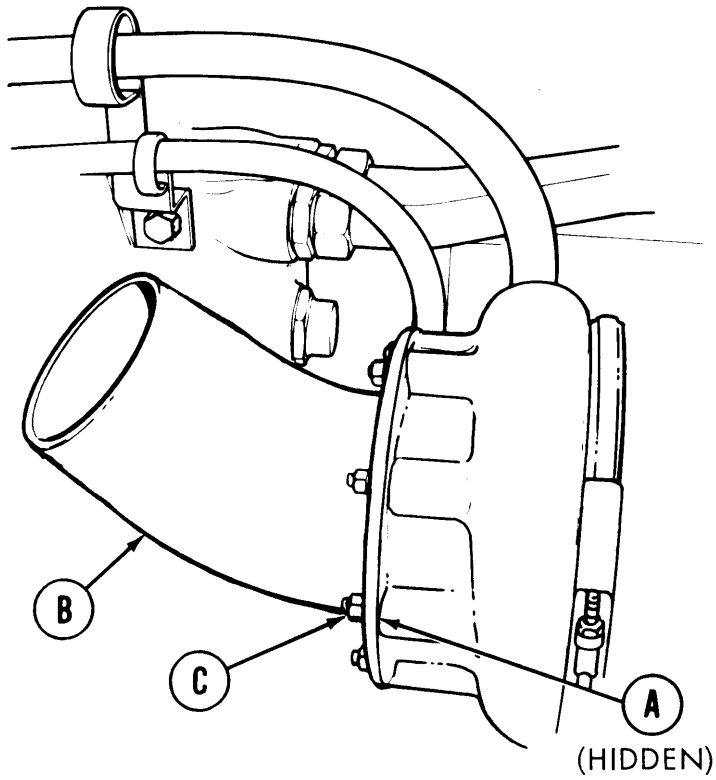

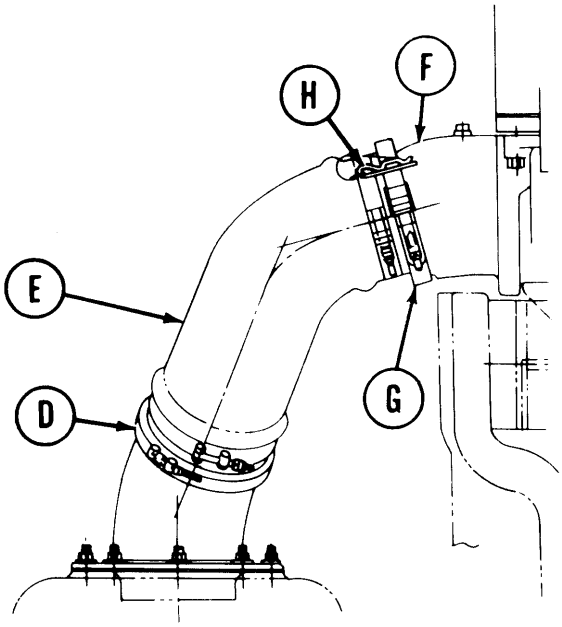

5. Put clamp (D) on turbosupercharger elbow flange.

6. Position hose assembly (E) between air cleaner outlet elbow and turbosupercharger inlet elbow.

7. Aline hose flange to turbosupercharger elbow flange. Position clamp (D) on hose assembly (E) and hand tighten clamp nut.

8. Aline hose flange to air cleaner outlet elbow (F) and install clamp (G).

9. Engage "T" bolts to hasp on clamp (G) and close clamp handle.

10. Install pin (H) to secure clamp handle.

11. Close top deck door assemblies (TM 5-5420-202-10).

☆ U.S. GOVERNMENT PRINTING OFFICE: 1992— 643–025/40203

End of Task

ENGINE OIL FILTER ELEMENT REPLACEMENT (Sheet 2 of 5)

REMOVAL:

1. Using 9/16 inch socket, remove screw (A) and sealing washer from filter element cover (B). Discard sealing washer.

2. Using wrench, turn valve (C) to the left six full turns.

NOTE

Wait about five minutes before doing steps 3 thru 7.

3. Using 9/16 inch socket, remove ten self-locking nuts and washers (D).

4. Install two 3/8-24UNF by 3-inch screws in threaded holes (E).

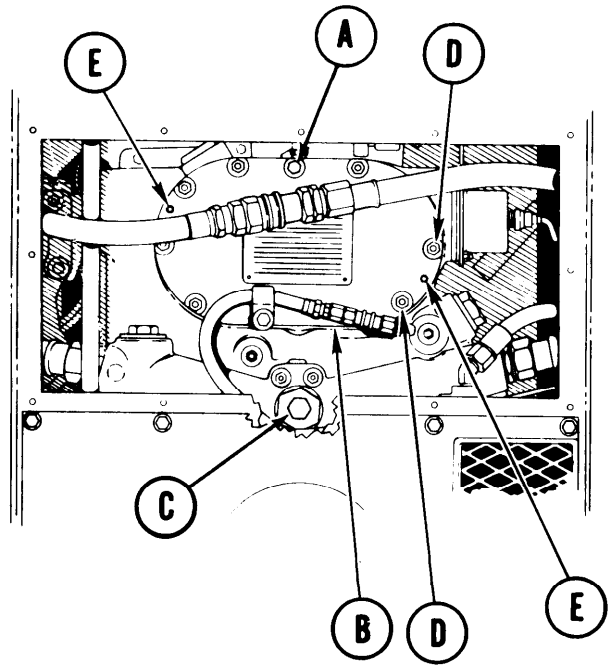

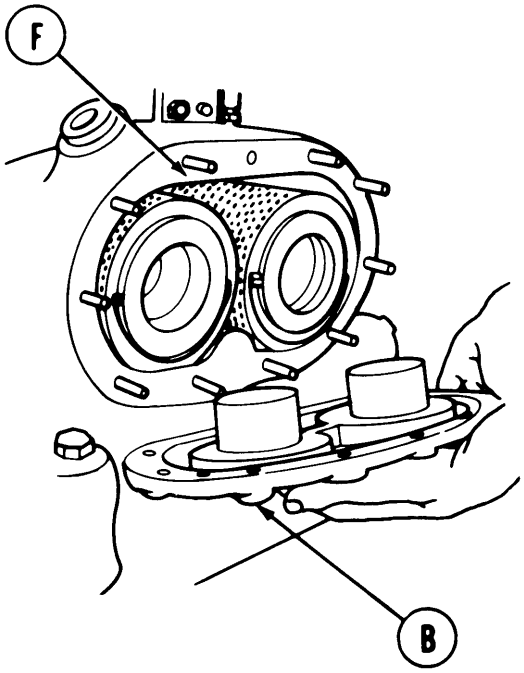

5. Using 9/16 inch socket, tighten screws in hole (E) and remove filter cover (B).

6. Remove gasket (F) and throw away gasket (F).

Go on to Sheet 3

TA248069

ENGINE OIL FILTER ELEMENT REPLACEMENT (Sheet 3 of 5)

7. Using handles (G), remove filter elements (H) and throw away.

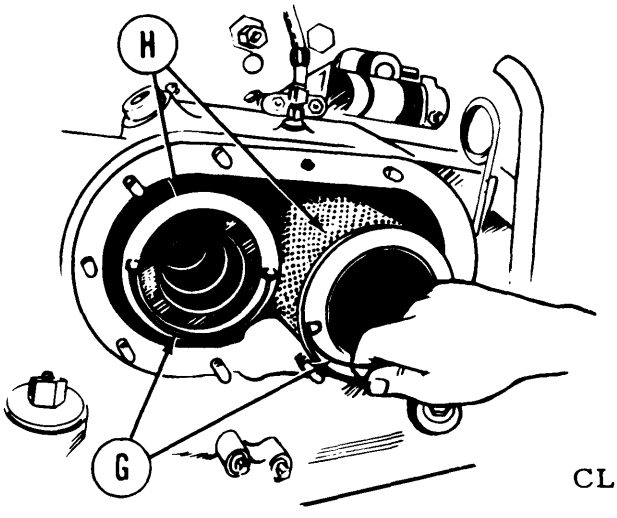

CLEANING AND INSPECTION:

WARNING

Dry cleaning solvent P-D-680 is toxic and flammable. To prevent personal injury, wear protective goggles and gloves and use only in a well-ventilated area. Avoid contact with skin, eyes, and clothes and don't breathe vapors. Do not use near open flame or excessive heat. The flash point for Type #l Dry Cleaning Solvent is 100°F (38°C) and for Type #2 is 138°F (50°C). If you become dizzy while using cleaning solvent, get fresh air immediately and get medical aid. If contact with eyes is made, wash your eyes with water and get medical aid immediately.

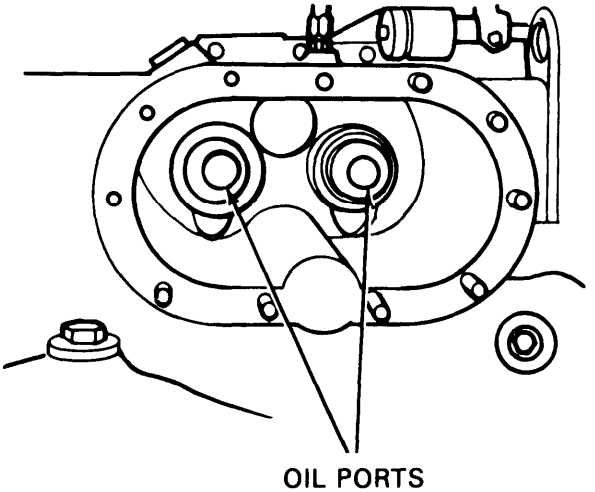

1. Using clean dry cloth, clean oil ports.
2. Check nuts, and retaining screws for stripped threads.
3. Inspect filter cover for holes, chips and cracks.
4. Replace parts as needed.

Go on to Sheet 4

TA248070

ENGINE OIL FILTER ELEMENT REPLACEMENT (Sheet 4 of 5)

INSTALLATION:

1. Using handles (A) install replacement filter elements (B).

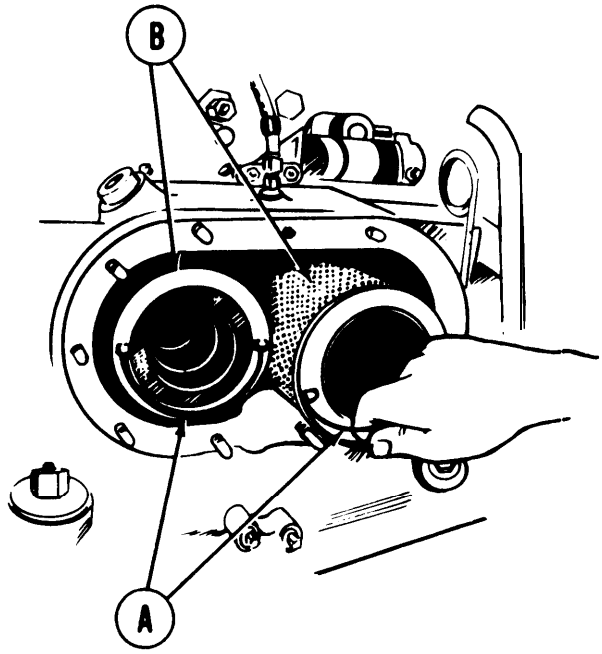

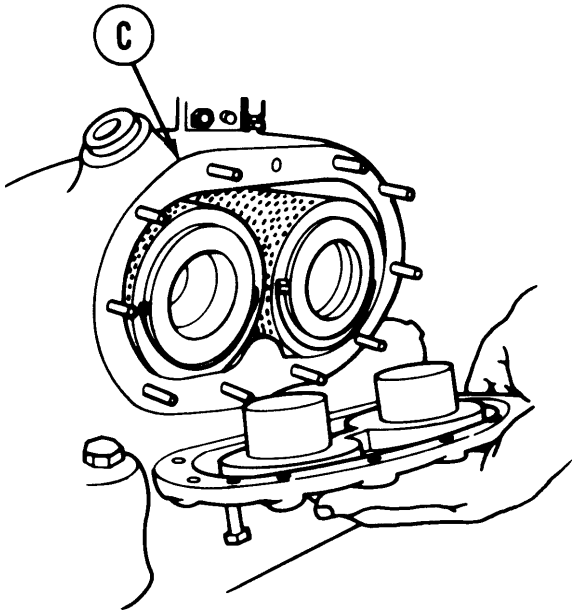

2. Install replacement gasket (C).

Go on to Sheet 5

TA248071

ENGINE OIL FILTER ELEMENT REPLACEMENT (Sheet 5 of 5)

3. Install filter cover (D), making sure hole (E) is at the top.

4. Using 9/16 inch socket, remove screws from hole (F).

5. Place clamp (G) in position on filter cover (D).

6. Using 9/16 inch socket, install ten self-locking nuts and washers (H) to secure cover. Do not overtighten as stripping may result.

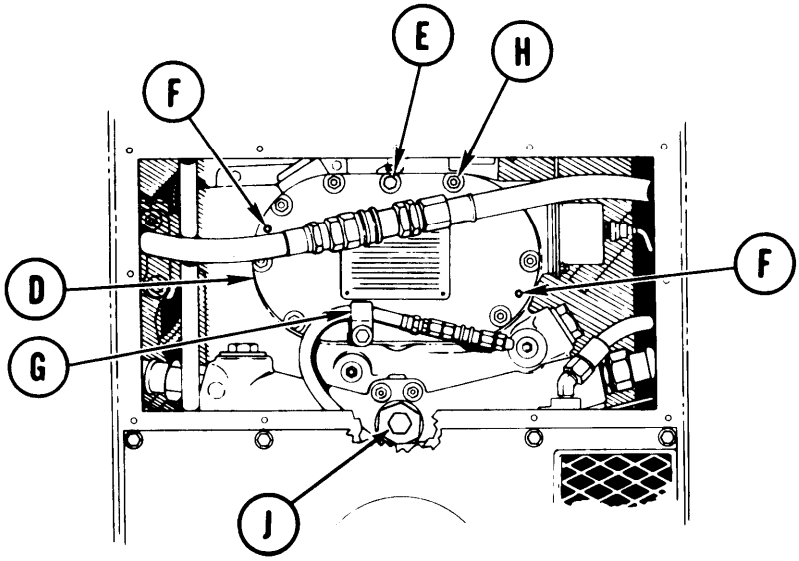

7. Using 3/4 inch wrench, tighten valve (J). Using torque wrench and 3/4 inch socket, tighten valve (J) to 150-180 lb-in (17-29 NŽm).

8. Using 9/16 inch socket, install and tighten new washer and capscrew into hole (E).

9. Connect fire extinguisher line (page 5-21, step 55).

10. Start and run engine (TM 5-5420-202-10). Check for oil leaks.

11. Shut down engine.

12. Install upper engine access cover (page 17-12).

13. Replenish engine oil (LO 5-5420-202-12).

TA248072

End of Task

ENGINE OIL FILLER CAP REPLACEMENT (Sheet 1 of 3)

TOOLS: 1/2 in. socket with 1/2 in. drive
Ratchet with 1/2 in. drive

SUPPLIES: Gasket
Preformed Packings (2 required)

PRELIMINARY PROCEDURES: Remove powerplant (page 5-2)
Remove engine shroud (page 9-30)

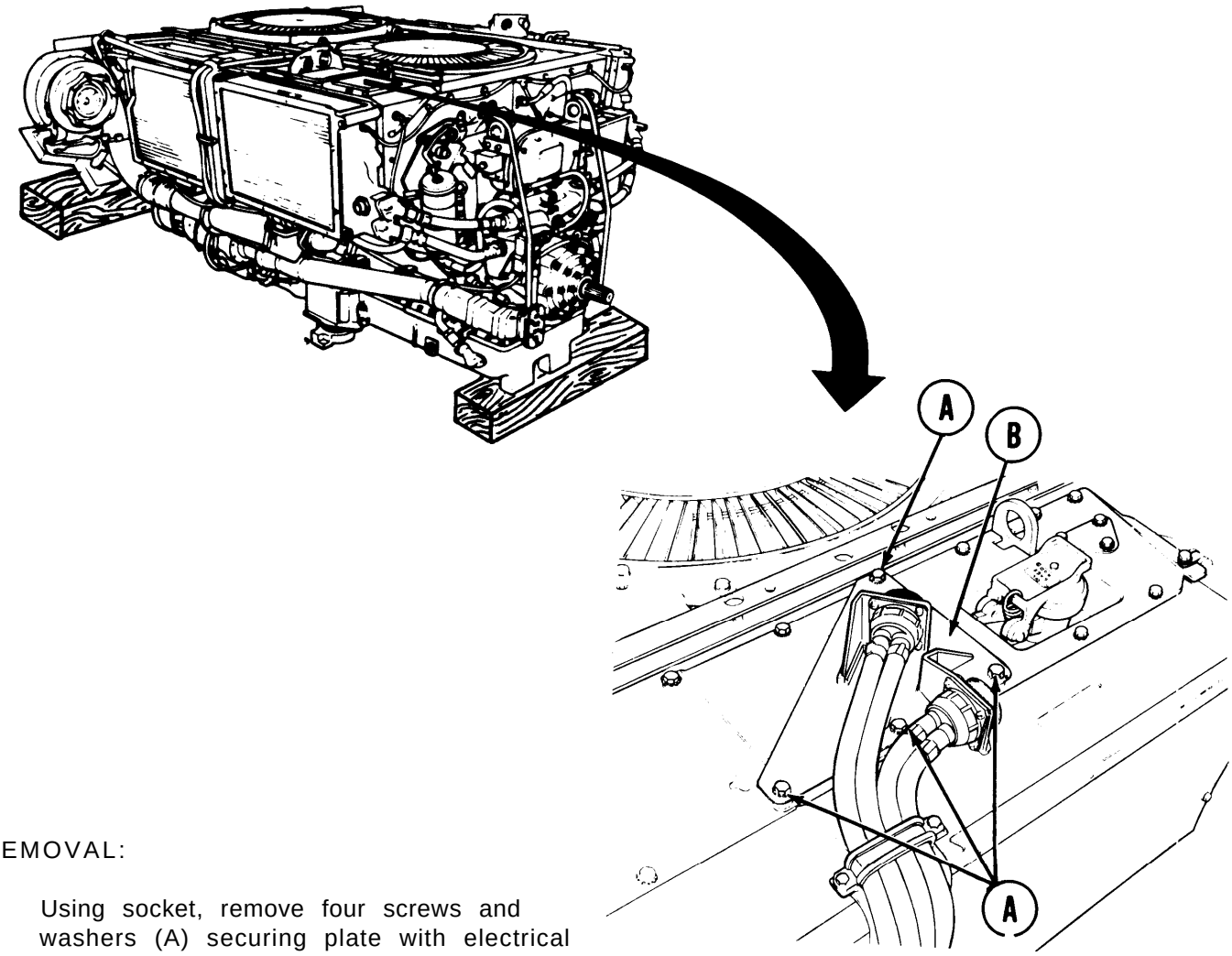

REMOVAL:

1. Using socket, remove four screws and washers (A) securing plate with electrical connectors (B).

2. Position plate with electrical connector (B) aside.

Go on to Sheet 2

TA248073

ENGINE OIL FILLER CAP REPLACEMENT (Sheet 2 of 3)

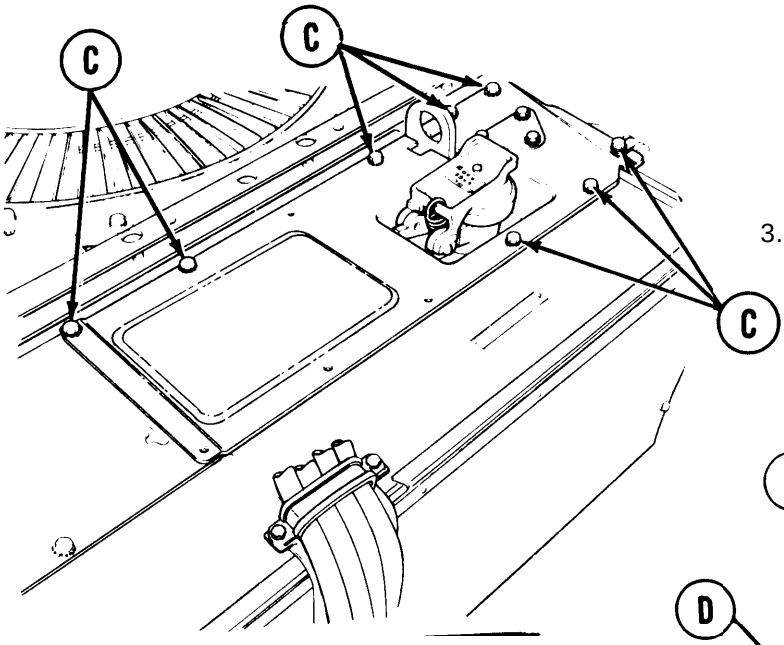

3. Using socket, remove eight screws and washers (C).

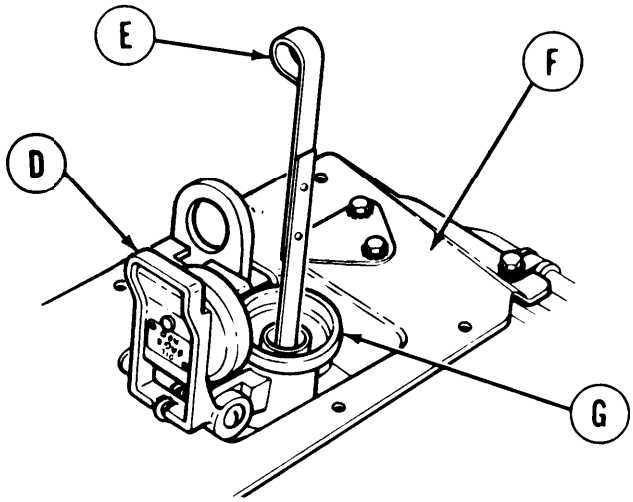

4. Open filler cap (D), remove gage (E) from inside of cap.

5. Remove front engine access plate (F) and cap assembly (G) by pulling up on cap (D).

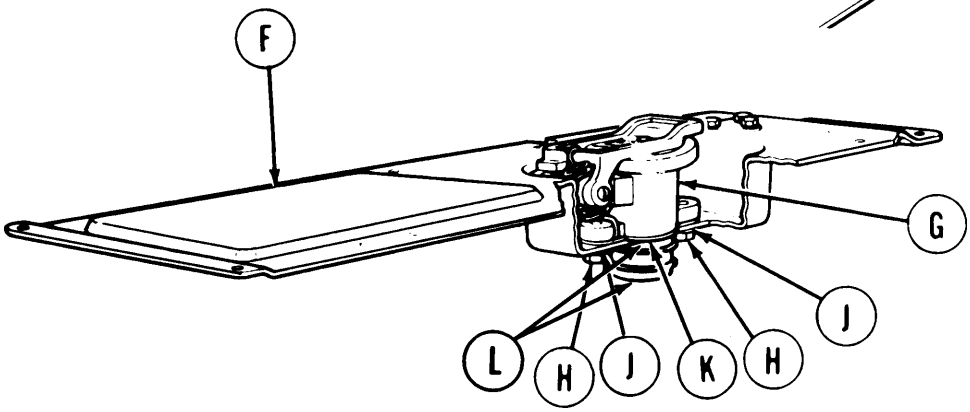

6. Using socket, remove two screws (H) and washers (J).

7. Remove cap assembly (G) and gasket (K) from access plate (F). Throw gasket (K) away.

8. Remove two preformed packings (L). Throw preformed packings (L) away.

Go on to Sheet 3

TA248074

ENGINE OIL FILLER CAP REPLACEMENT (Sheet 3 of 3)

INSTALLATION:

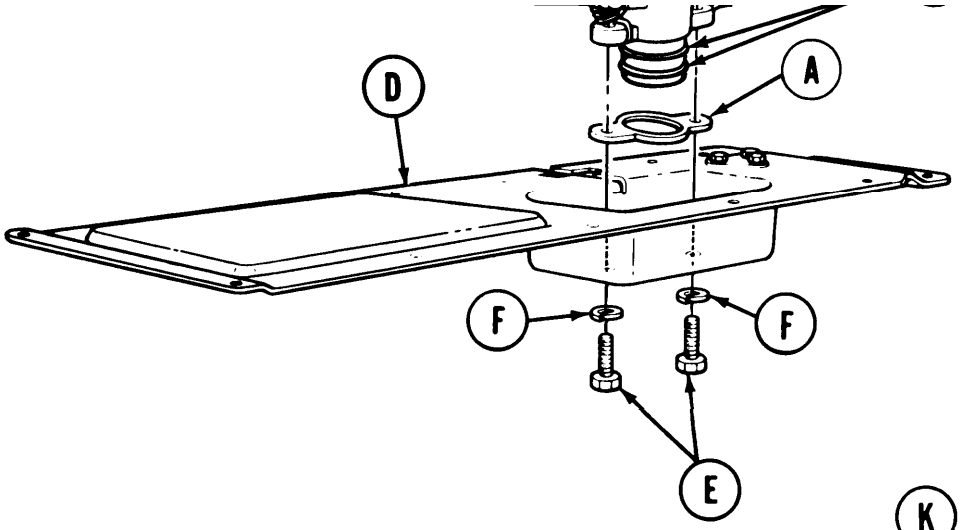

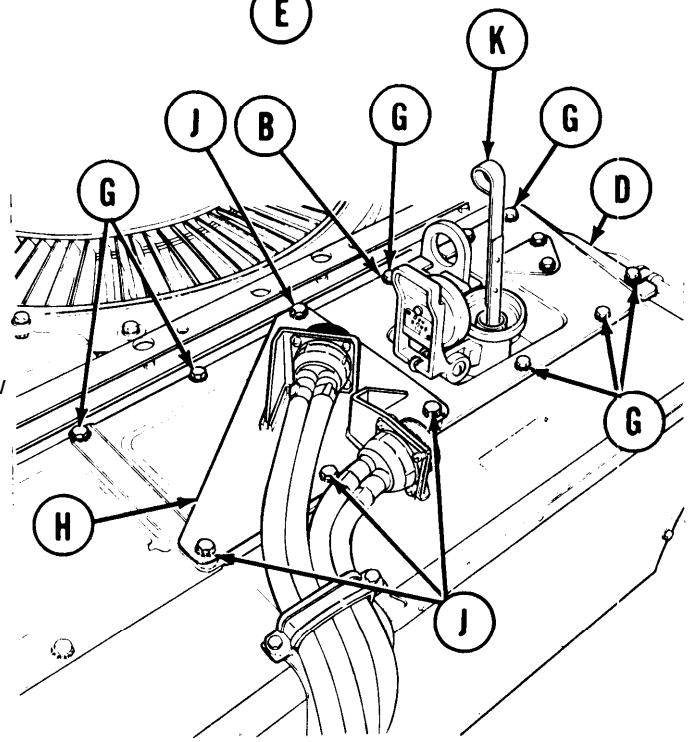

1. Place new gasket (A) on cap assembly (B).
2. Place two preformed packings (C) on cap assembly (B).
3. Place cap assembly (B) in position on engine access plate (D).
4. Using socket, install and tighten two screw (E) and washers (F).
5. Place engine access plate (D) in position on powerplant and push down until seated.
6. Using socket, install and tighten eight screws and washers (G).
7. Place plate with electrical connectors (H) in position.
8. Using socket, install and tighten four screws and washers (J).
9. Open filler cap (B), insert gage (K) and close filler cap (B).
10. Install engine shroud (page 9-31).
11. Install powerplant (page 5-14).

End of Task

TA248075

UPPER OIL FILLER TUBE REPLACEMENT (Sheet 1 of 4)

PROCEDURE INDEX

PROCEDURE	PAGE
Removal	6-84
Installation	6-86

TOOLS: 5/16 in. combination box and open end wrench
5 in. extension with 1/2 in. drive
Ratchet with 1/2 in. drive
1/2 in. socket with 1/2 in. drive
1/2 in. combination box and open end wrench
Putty knife
Flat-tip screwdriver
Vise
Hammer

SUPPLIES: Packing
Drive screws (2 required)

PRELIMINARY PROCEDURE: Remove powerplant (page 5-2).

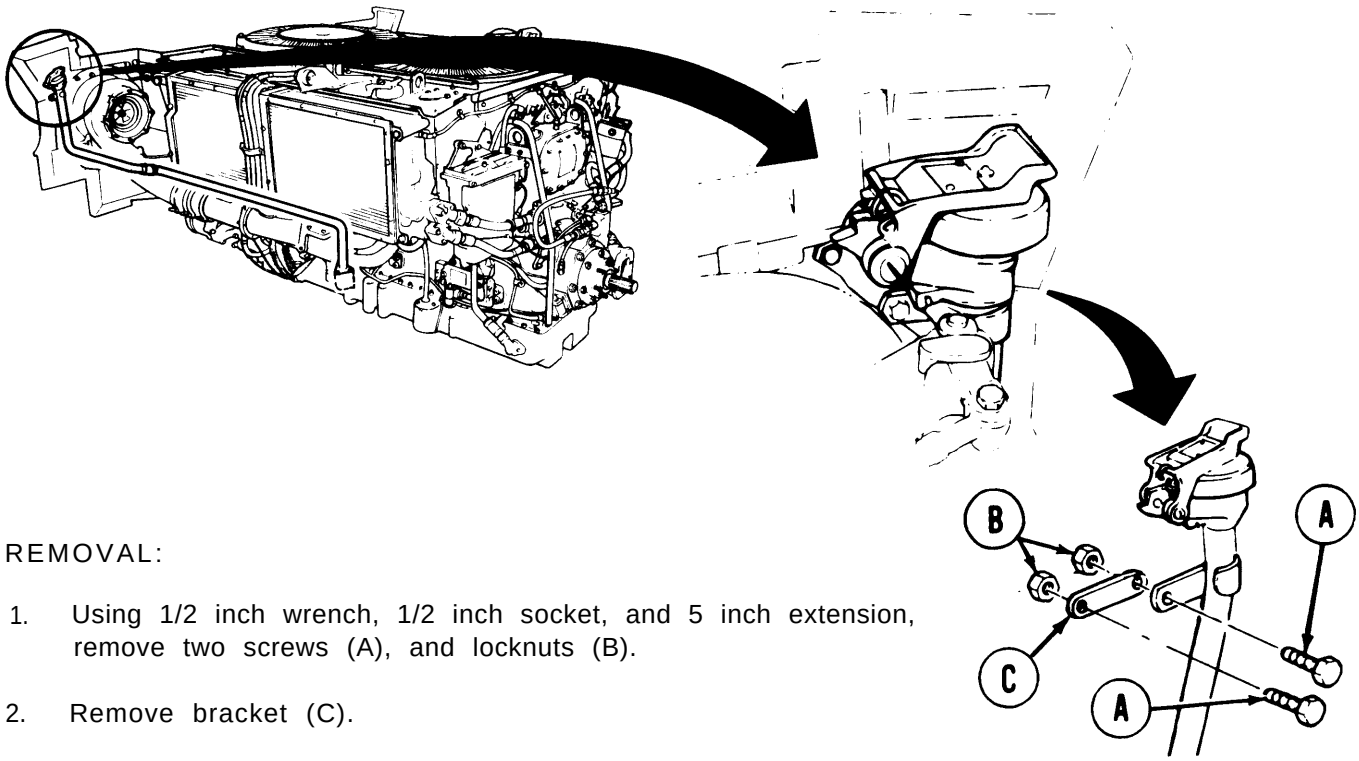

REMOVAL:

1. Using 1/2 inch wrench, 1/2 inch socket, and 5 inch extension, remove two screws (A), and locknuts (B).

2. Remove bracket (C).

Go on to Sheet 2

TA248076

UPPER OIL FILLER TUBE REPLACEMENT (Sheet 2 of 4)

3. Using 1/2 inch socket, remove two screws (D) and lockwashers (E).

4. Using 5/16 inch wrench on nut of clamp (F) loosen clamp.

5. Slip clamp (F) off hose (G).

6. Pull tube assembly (H) loose from hose (G) and remove tube assembly.

7. Using screwdriver, release spring (J) from cap assembly (K). Remove spring.

8. Using screwdriver, remove two screws (L) and remove cap assembly (K).

9. Remove packing (M) from under lip of cap assembly (K).

10. Using putty knife under plate (N) remove two drive screws (P), flat washers (Q), and plate (N). Throw away driver screws.

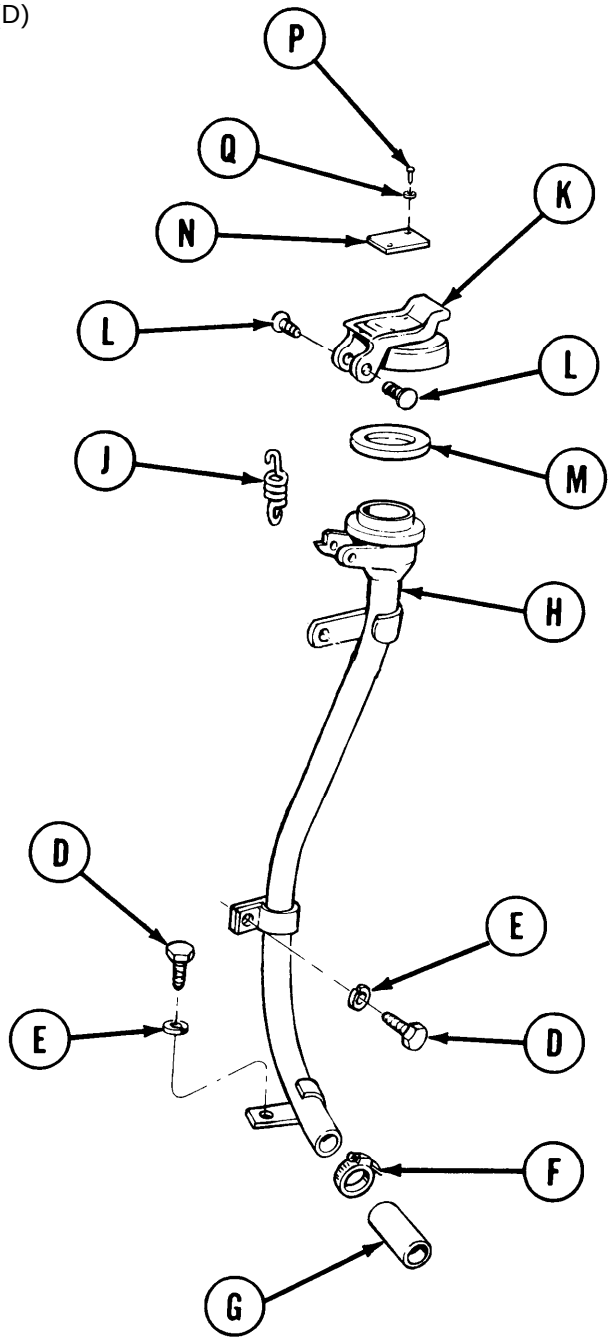

Go on to Sheet 3

TA248077

UPPER OIL FILLER TUBE REPLACEMENT (Sheet 3 of 4)

INSTALLATION:

1. Position plate (A) on cap assembly (B).

2. Place two flat washers (C) on two new drive screws (D).

3. Using hammer, carefully tap two drive screws (D) through holes in plate (A) into cap assembly (B).

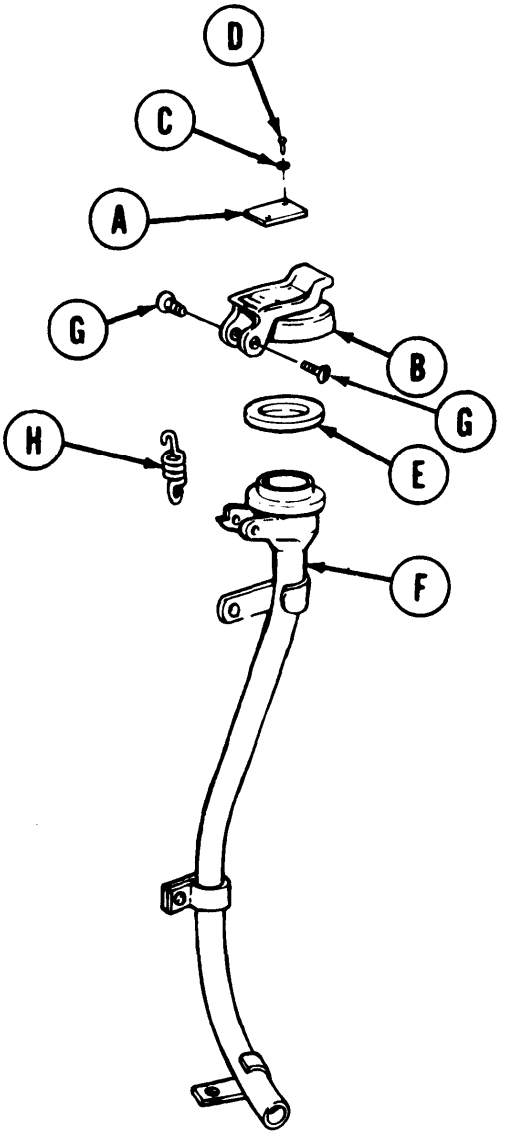

4. Press new packing (E) under lip of cap assembly (B).

5. Position cap assembly (B) on tube assembly (F).

6. Using screwdriver, install two screws (G).

7. Place tube assembly (F) in a vise, place rounded end of spring (H) in notch of cap assembly (B), and using a screwdriver, work end of spring in notch of tube assembly (F).

Go on to Sheet 4

TA248078

UPPER OIL FILLER TUBE REPLACEMENT (Sheet 4 of 4)

8. Place clamp (J) on hose (K) with nut facing you.

9. Position tube assembly (F) with its assembled parts on powerplant.

10. Push tube assembly (F) into hose (K).

11. Position clamp (J) over end of hose (K).

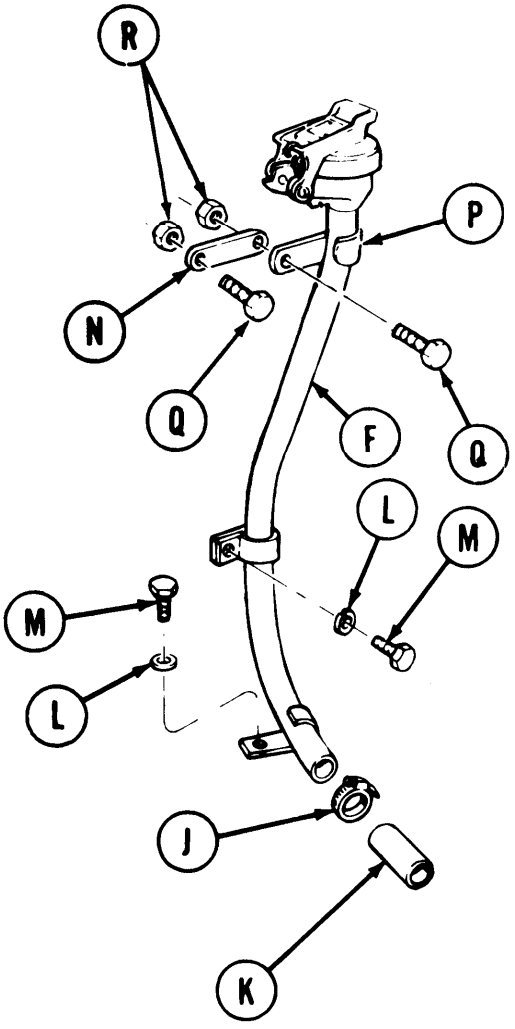

12. Place two lockwashers (L) on two screws (M).

13. Start two screws (M) through clamps of tube assembly (F).

14. Using 1/2 inch socket, tighten two screws (M).

15. With clamp (J) positioned over end of hose, use 5/16 inch wrench and tighten nut of clamp (J).

16. Position bracket (N), clamp (P), and two screws (Q).

17. Start nuts (R) on screws (Q).

18. Using 1/2 inch socket and 1/2 inch wrench, tighten nuts (R).

19. Install powerplant (page 5-14).

End of Task

TA248079

LOWER OIL FILLER TUBE AND HOSE REPLACEMENT (Sheet 1 of 2)

TOOLS: 5/16 in. socket with 1/2 in. drive
5 in. extension with 1/2 in. drive
1/2 in. open end wrench
Putty knife
Ratchet with 1/2 in. drive

SUPPLIES: Gasket
Drycleaning solvent (Item 55, Appendix D)
Rags (Item 65, Appendix D)
Gloves (Item 69, Appendix D)
Goggles (Item 70, Appendix D)

PRELIMINARY PROCEDURE: Remove powerplant (page 5-2)

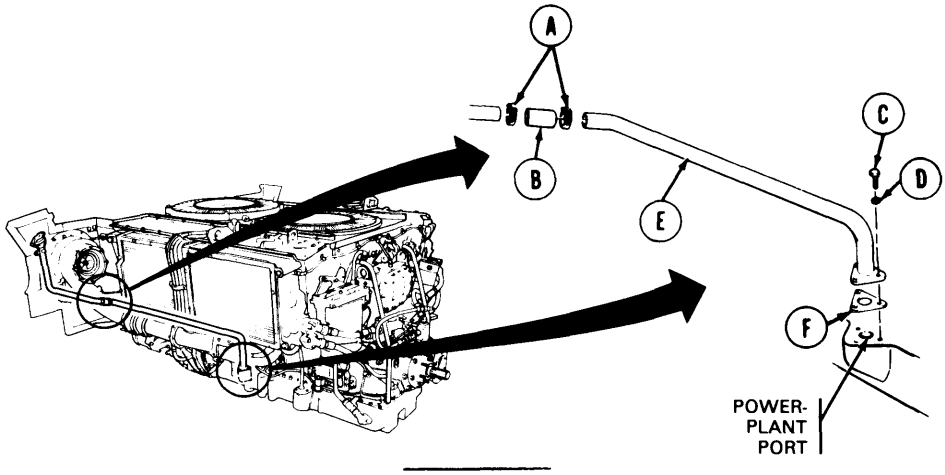

WARNING

Dry cleaning solvent P-D-680 is toxic and flammable. To prevent personal injury, wear protective goggles and gloves and use only m a well-ventilated area. Avoid contact with skin, eyes, and clothes and don't breathe vapors. Do not use near open flame or excessive heat. The flash point for Type #1 Dry Cleaning Solvent is 100°F (38°C) and for Type #2 is 138°F (50°C). If you become dizzy while using cleaning solvent, get fresh air immediately and get medical aid. If contact with eyes is made, wash your eyes with water and get medical aid immediately.

REMOVAL:

NOTE

Clean all parts and general area prior to removal.

1. Using 5/16 inch socket, loosen two clamps (A) from hose (B).
2. Using 1/2 inch wrench, remove three screws (C) and lockwashers (D) from tube assembly (E).
3. Pull tube assembly (E) and hose (B) loose and slip off two clamps (A).
4. Using putty knife, remove gasket (F) and throw away.

Go on to Sheet 2

TA248080

LOWER OIL FILLER TUBE AND HOSE REPLACEMENT (Sheet 2 of 2)

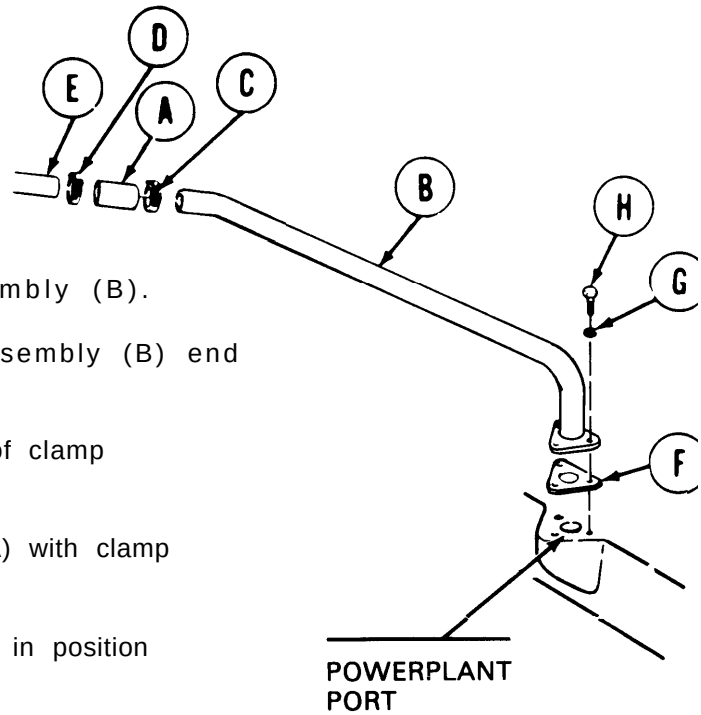

INSTALLATION:

1. Push hose (A) over tube assembly (B).
2. Position clamp (C) over tube assembly (B) end of hose (A).
3. Using 5/16 inch socket, tighten nut of clamp (C).
4. Place clamp (D) loosely over hose (A) with clamp nut facing you.
5. Place assembled parts (A through D) in position on powerplant.
6. Push end of hose (A) over upper tube end (E).
7. Position new gasket (F) and tube assembly (B) on powerplant port.
8. Place lockwashers (G) on three screws (H).
9. Insert three screws (H) in flange of tube assembly (B) and tighten finger tight.
10. Using 1/2 inch wrench, tighten screws (H).
11. Position clamp (D) on hose (A) over end of upper tube end (E).
12. Using 5/16 inch socket, tighten nut of clamp (D).
13. Install powerplant (page 5-14).

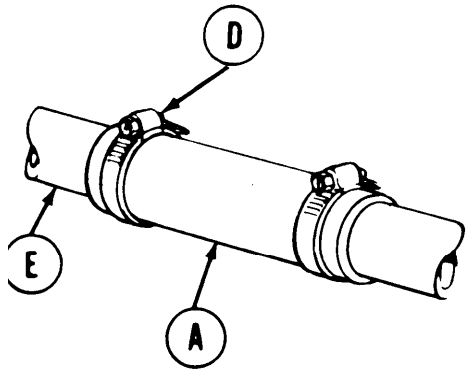

End of Task

TA248081

TURBOSUPERCHARGER OIL DRAIN TUBE (RIGHT BANK) REPLACEMENT
(Sheet 1 of 4)

PROCEDURE INDEX

PROCEDURE	PAGE
Removal	6-90
Inspection	6-91
Installation	6-92

TOOLS: 1/2 in. socket with 1/2 in. drive
Ratchet with 1/2 in. drive
Flat-tip screwdriver
5/16 in. combination box and open end wrench

SPECIAL TOOLS: Ground hop kit

SPECIAL TOOLS: Ground hop kit (Item 31, Chapter 3, Section I)

SUPPLIES: Lubricating oil (Item 44, Appendix D)
Gasket

REFERENCES: LO 5-5420-202-12

PRELIMINARY PROCEDURES: Remove powerplant (page 5-2)
Drain engine oil (page 6-1 2)
Remove generator (page 10-6)

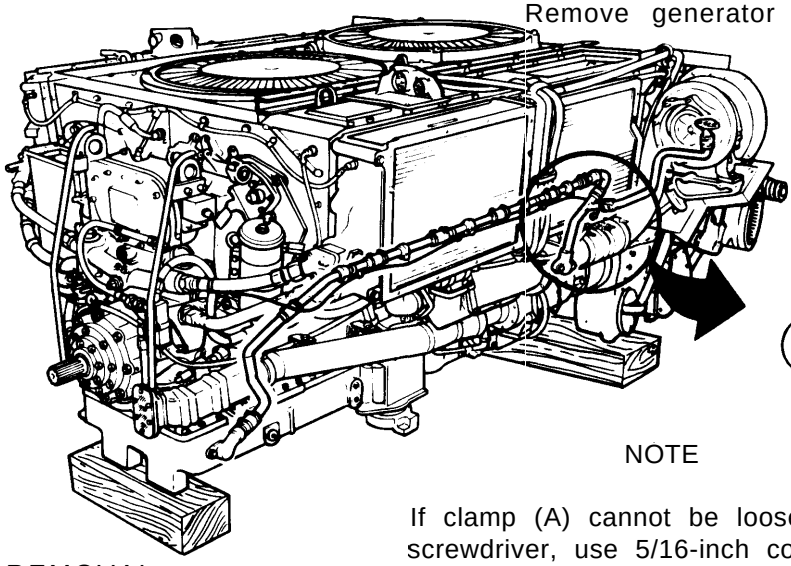

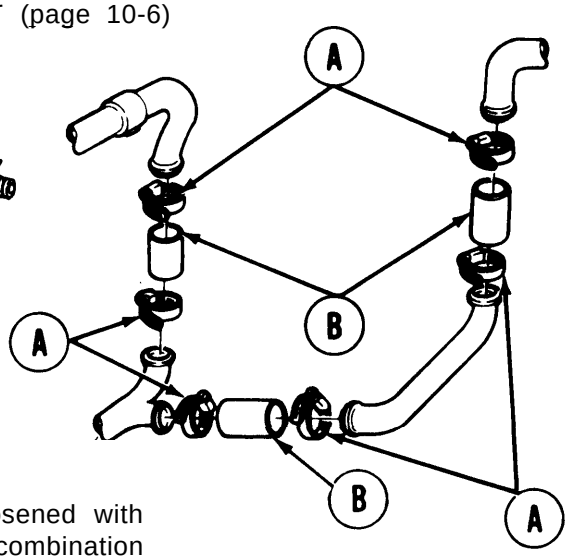

NOTE

If clamp (A) cannot be loosened with screwdriver, use 5/16-inch combination box and open end wrench.

REMOVAL:

1. Using screwdriver, loosen six clamps (A) on three hoses (B) on each end of upper drain tube.

Go on to Sheet 2

TA248082

TURBOSUPERCHARGER OIL DRAIN TUBE (RIGHT BANK) REPLACEMENT (Sheet 2 of 4)

2. Using 1/2 inch socket, remove two bolts and washers (C) securing tube (D) to engine.

3. Remove oil drain tube assembly (D) from engine.

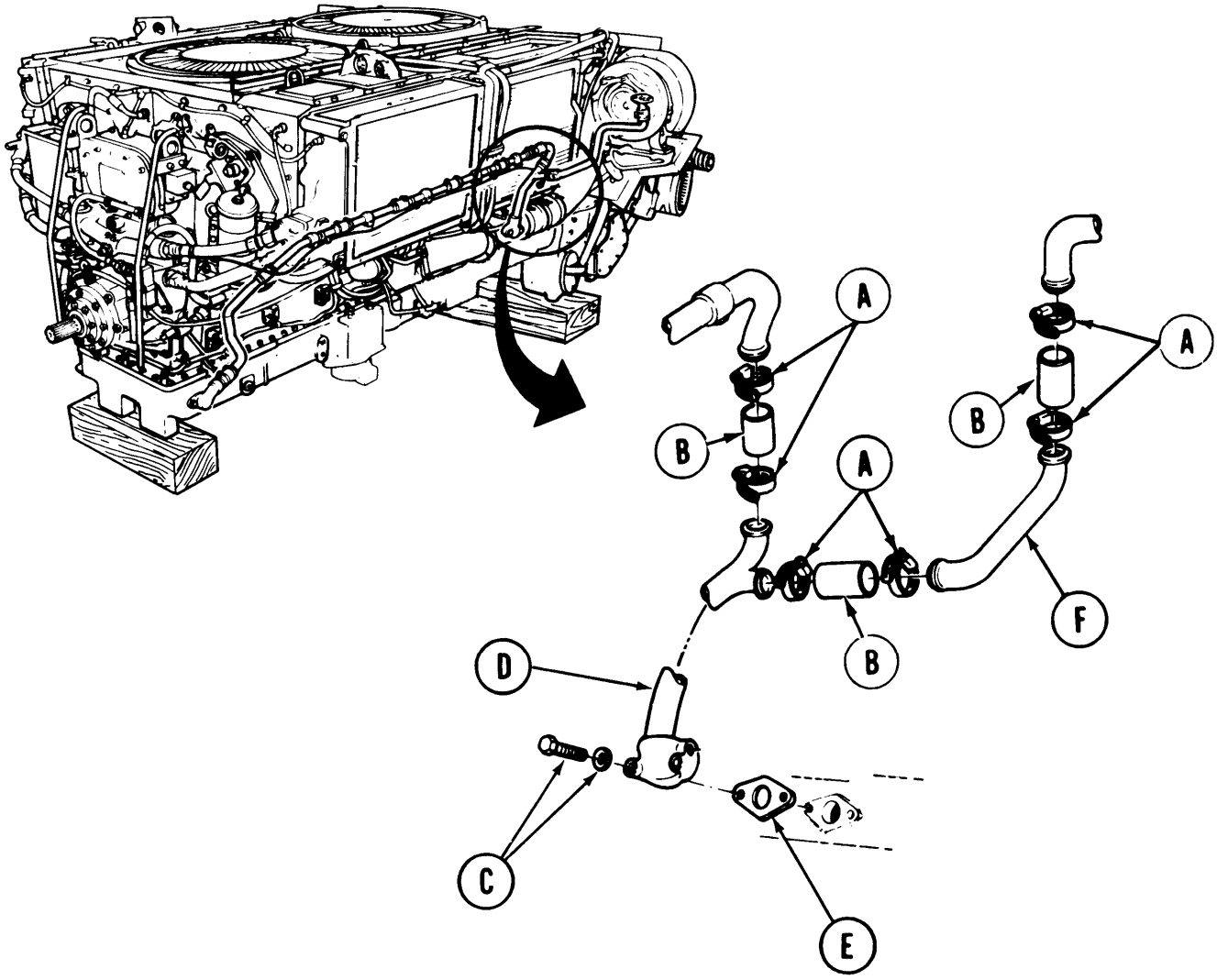

4. Remove gasket (E) and throw away.

5. Separate three hoses (B) and clamps (A) from tubes (D) and (F).

INSPECTION:

1. Inspect hose and clamps.

2. Replace defective parts as required.

Go on to Sheet 3

TA248083

TURBOSUPERCHARGER OIL DRAIN TUBE (RIGHT BANK) REPLACEMENT (Sheet 3 of 4)

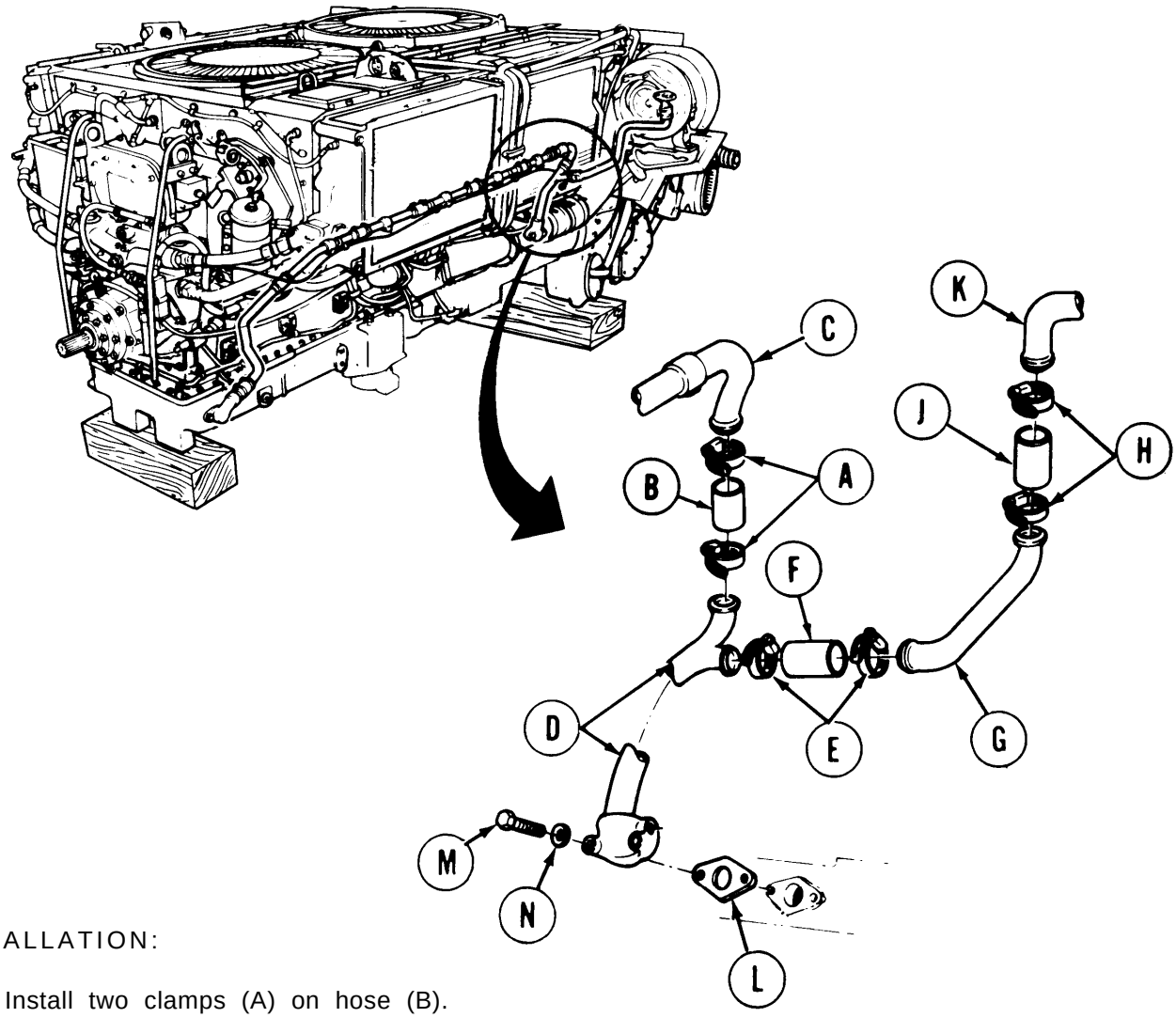

INSTALLATION:

1. Install two clamps (A) on hose (B).
2. Install hose (B) to tube (C) and tube (D).
3. Install two clamps (E) on hose (F).
4. Install hose (F) to tube (D) and tube (G).
5. Install two clamps (H) on hose (J).
6. Install hose (J) to tube (G) and tube (K).
7. Install new gasket (L), two bolts (M) and washers (N) to secure tube (D) to engine.
8. Using 1/2 inch socket, tighten two bolts (M).
9. Using screwdriver, tighten clamps (A), (E) and (H).

Go on to Sheet 4

TA248084

TURBOSUPERCHARGER OIL DRAIN TUBE (RIGHT BANK) REPLACEMENT (Sheet 4 of 4)

10. Replenish engine oil (LO 5-5420-202-12).

11. Install generator (page 10-10).

12. Connect powerplant test (ground hop) equipment (page 5-25).

13. Start engine and check for leaks.

14. Shut down engine.

15. Disconnect powerplant test (ground hop) equipment (page 5-40).

16. Install powerplant (page 5-14).

End of Task

TURBOSUPERCHARGER OIL DRAIN TUBE (LEFT BANK) REPLACEMENT (Sheet 1 of 3)

TOOLS: 1/2 in. socket with 1/2 in. drive
Ratchet with 1/2 in. drive
5/16 in. combination box and open end wrench
Flat-tip screwdriver

SPECIAL TOOLS: Ground hop kit (Item 31, Chapter 3, Section 1)

SUPPLIES: Gasket

REFERENCE: LO 5-5420-202-12

PRELIMINARY PROCEDURES:

Remove powerplant (page 5-2)
Drain engine oil (page 6-12)

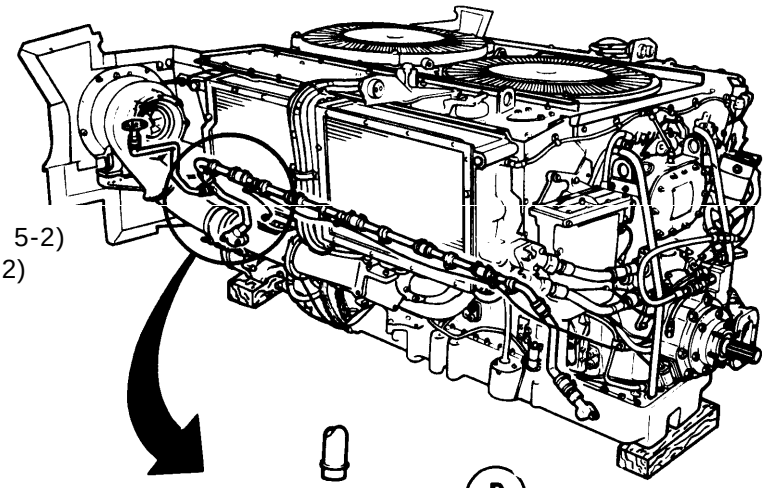

REMOVAL:

1. Using 1/2 inch socket, remove two bolts (A) and two washers (B).
2. Remove gasket (C).
3. Throw gasket (C) away.

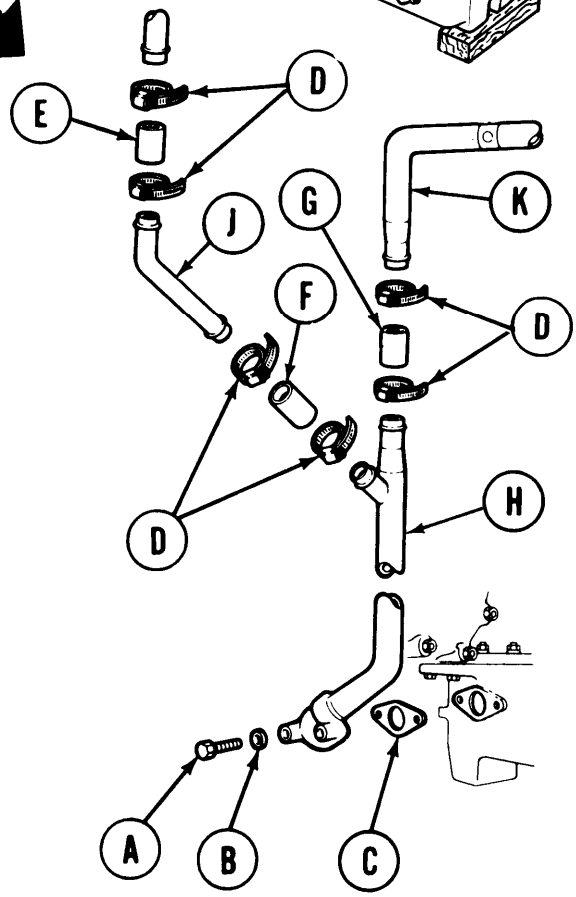

NOTE

If clamps (D) cannot be loosened using screwdriver, use 5/16 inch wrench.

4. Using screwdriver, loosen six clamps (D) on three hoses (E), (F) and (G).
5. Remove oil drain tube assembly (H) from engine.
6. Remove six clamps (D) and three hoses (E), (F) and (G) from tubes (J) and (K).

INSPECTION:

1. Inspect bolts (A) for stripped threads.
2. Inspect hoses and hose clamps for general serviceability.
3. Replace defective parts as required.

Go on to Sheet 2

TA248085

TURBOSUPERCHARGER OIL DRAIN TUBE (LEFT BANK) REPLACEMENT (Sheet 2 of 3)

INSTALLATION:

1. Cut (3) hoses (A), (B) and (C) to prescribed length (approximately 3 inches).

2. Install two hoses (A) and (B) on tube (D).

3. Install four clamps (E) on tubes (A) and (B).

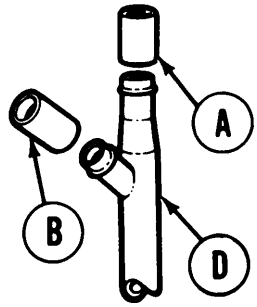

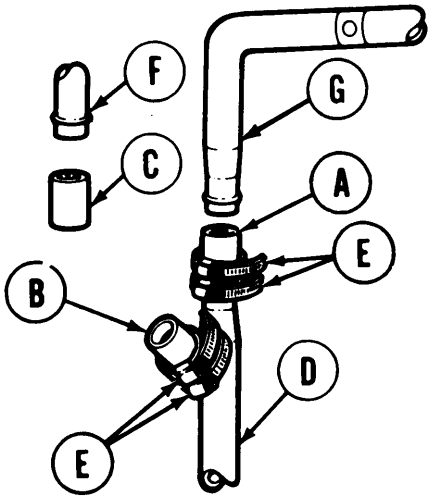

4. Install hose (C) on tube (F).

5. Connect hose (A) to tube (G).

6. Install two clamps (E) on tube (H).

7. Install tube (H) between hose (C) and hose (B).

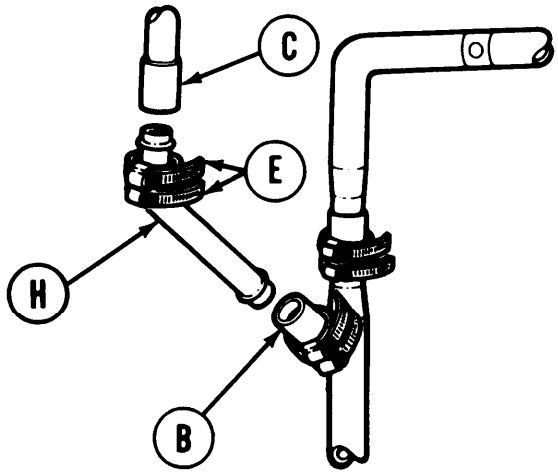

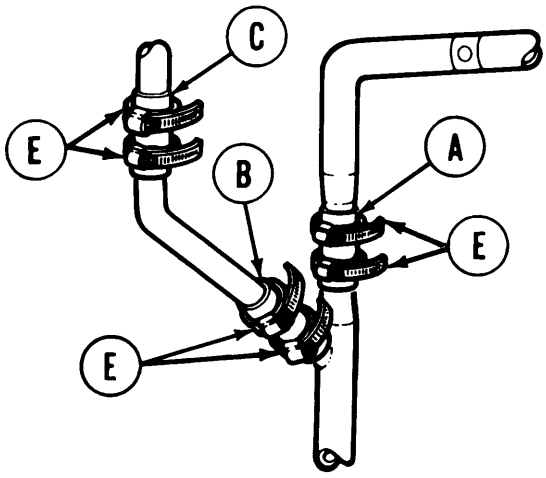

8. Position six clamps (E) on three hoses (A), (B) and (C).

Go on to Sheet 3

TA248086

TURBOSUPERCHARGER OIL DRAIN TUBE (LEFT BANK) REPLACEMENT (Sheet 3 of 3)

9. Position new gasket (J) on flange (K).

10. Using socket, install two bolts (L) and two washers (M) to secure tube cylinder head oil drain assembly (D).

11. Using screwdriver, tighten six clamps (E) to secure hoses (A), (B) and (C).

12. Replenish engine oil (LO 5-5420-202-12).

13. Connect powerplant test (ground hop) equipment (page 5-25).

14. Start engine and check oil drain line assembly for leaks.

15. Shut down engine.

16. Disconnect powerplant test (ground hop) equipment (page 5-40).

17. Install powerplant (page 5-14).

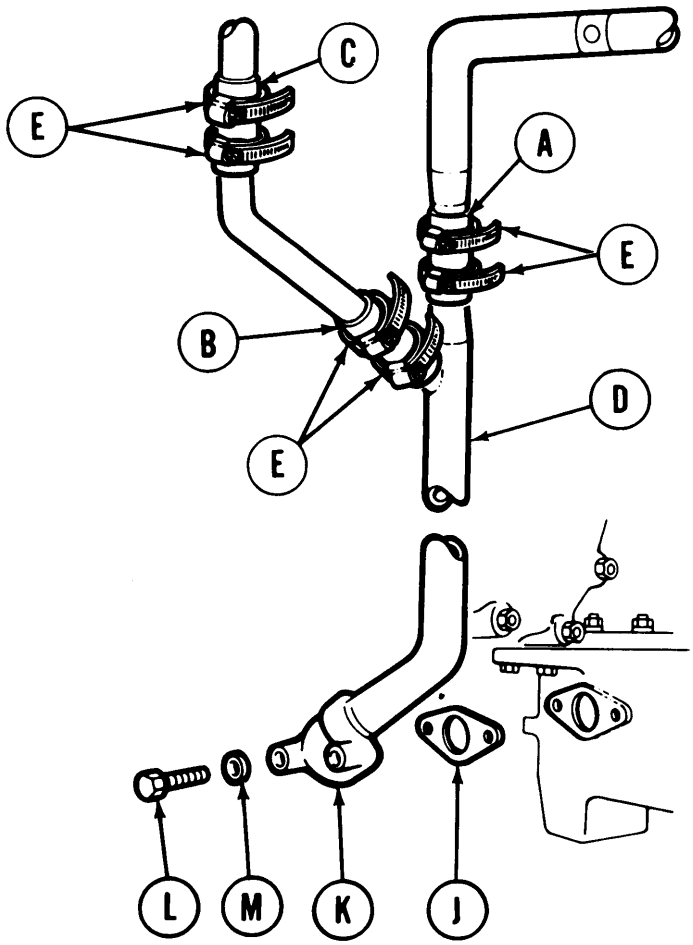

End of Task

TA248087

CRANKCASE BREATHER TEE AND REAR TUBE REPLACEMENT (Sheet 1 of 6)

PROCEDURE INDEX

PROCEDURE	PAGE
Removal	6-98
Installation	6-100

TOOLS: 1/2 in. combination box and open end wrench (2 required)
Flat-tip screwdriver with 1/4 in. blade

SUPPLIES: Gasket (two required)
Lockwasher (two required)
Hose (four required)
Self-locking nut

PRELIMINARY PROCEDURES: Remove top deck (page 16-21)
Remove transmission shroud (page 9-2)
Remove rear engine cooling fan (page 9-55)

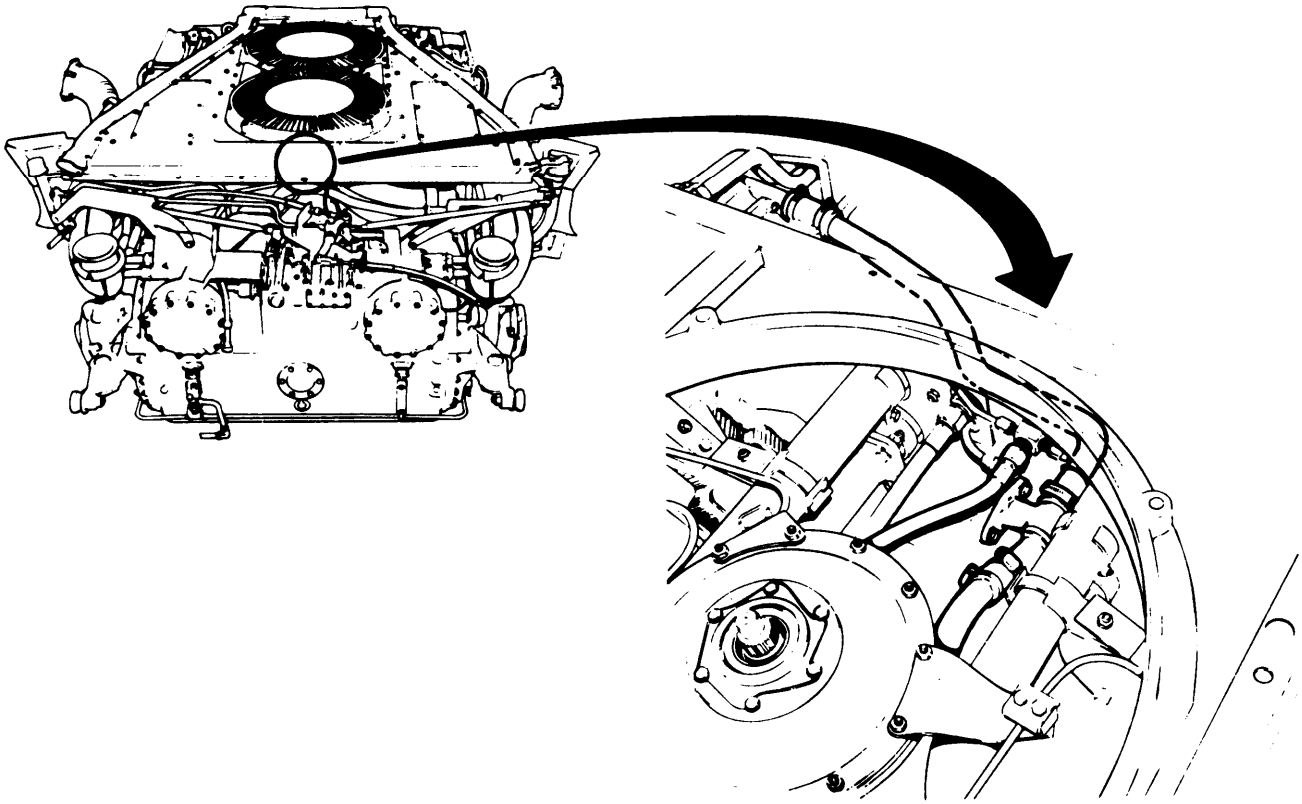

Go on to Sheet 2

CRANKCASE BREATHER TEE AND REAR TUBE REPLACEMENT (Sheet 2 of 6)

REMOVAL:

1. Using screwdriver, loosen two clamps (A) holding breather tube (B) to exhaust tube (C) and breather tee (D).

2. Remove breather tube (B) from tank.

3. Using screwdriver, loosen clamp (E).

4. Using 1/2 inch wrench, remove two screws and washers (F) holding breather tee (D) to engine.

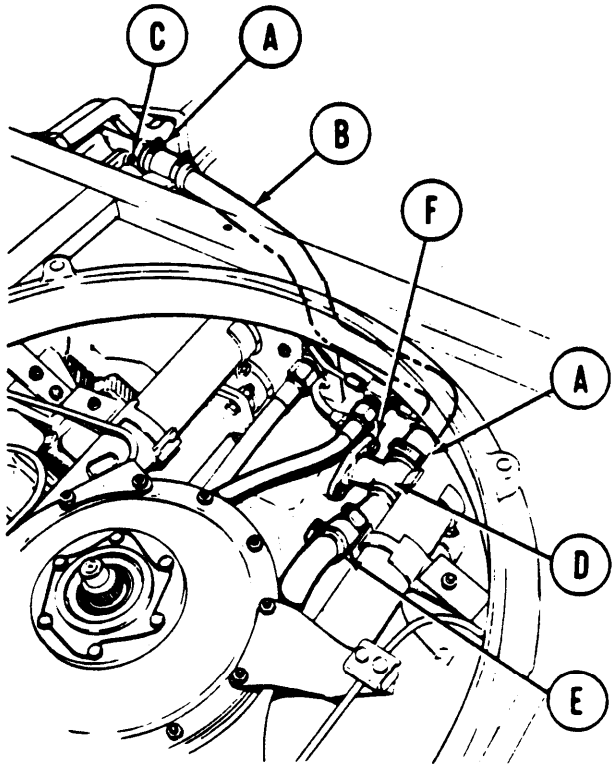

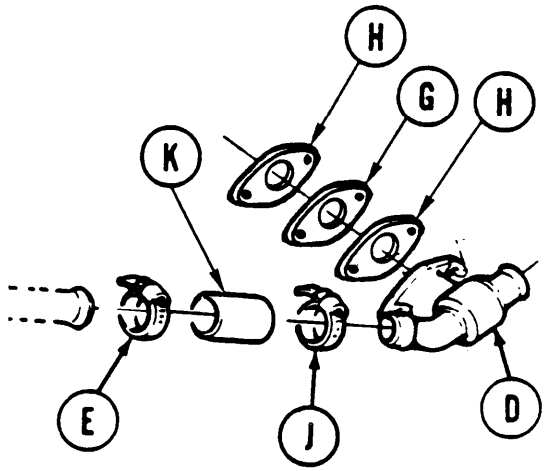

5. Remove breather tee (D), spacer (G) and two gaskets (H) from engine. Throw gaskets away.

6. Using screwdriver, loosen

7. Remove clamps (E), (J), and hose (K) from breather tee (D). Throw hose (K) away.

Go on to Sheet 3

CRANKCASE BREATHER TEE AND REAR TUBE REPLACEMENT (Sheet 3 of 6)

8. Using screwdriver, loosen two clamps (L).

9. Remove clamps (A) and (L) and two hoses (M) from breather tube (B). Throw hoses (M) away.

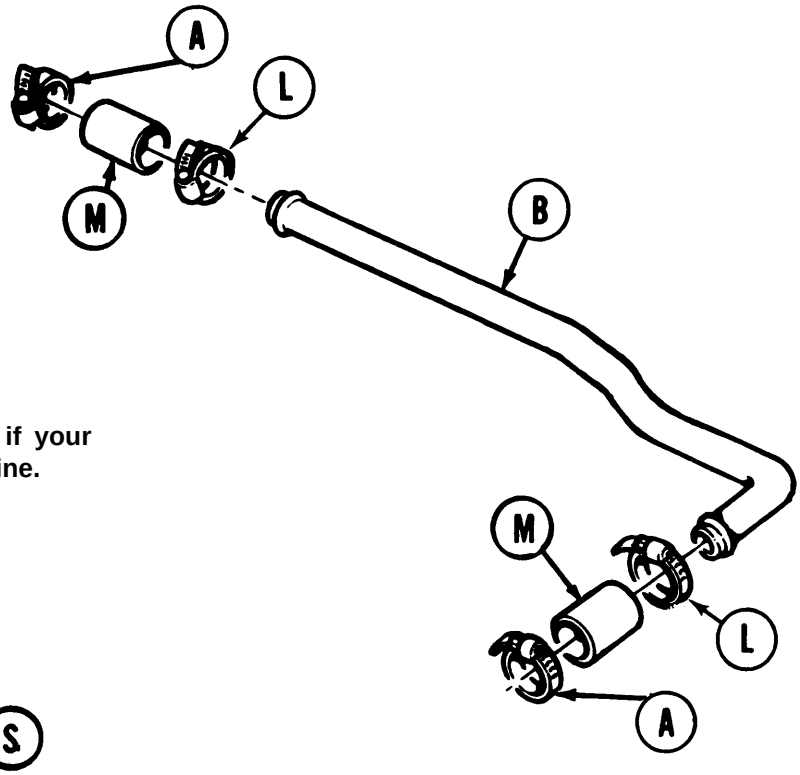

NOTE

Perform steps 10 through 13 only if your vehicle is equipped with a 2DA engine.

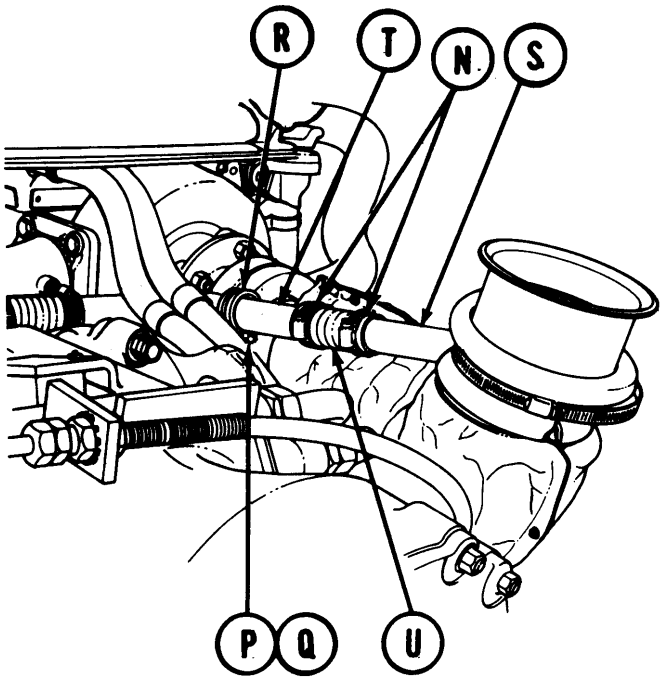

10. Using screwdriver, loosen two clamps (N).

11. Using one wrench to hold nut (P), use another wrench and remove screw (Q) securing clamp (R) to bracket on left ejector tube (S). Throw nut away.

12. Remove clamp (R) from engine breather tube extension (T).

13. Remove engine breather tube extension (T), hose (U), and clamps (N). Throw hose away.

Go on to Sheet 4

CRANKCASE BREATHER TEE AND REAR TUBE REPLACEMENT (Sheet 4 of 6)

INSTALLATION:

1. Install new hose (A) on breather tube (B). Place two clamps (C) on hose (A).

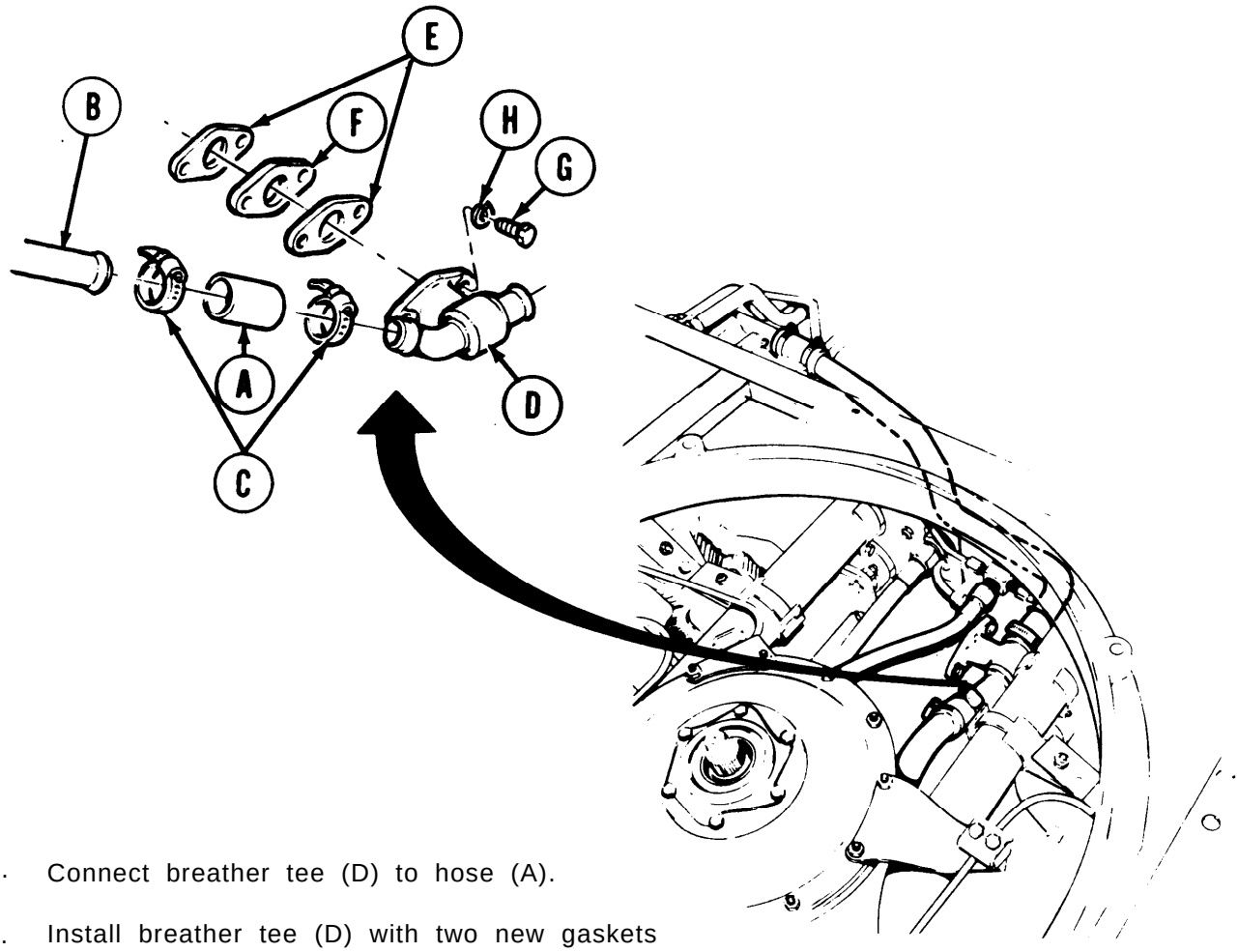

2. Connect breather tee (D) to hose (A).

3. Install breather tee (D) with two new gaskets (E) and spacer (F) to engine, using two screws (G) and new lockwashers (H).

4. Using screwdriver, tighten two clamps (C).

5. Using wrench, tighten two screws (G).

Go on to Sheet 4

CRANKCASE BREATHER TEE AND REAR TUBE REPLACEMENT (Sheet 5 of 6)

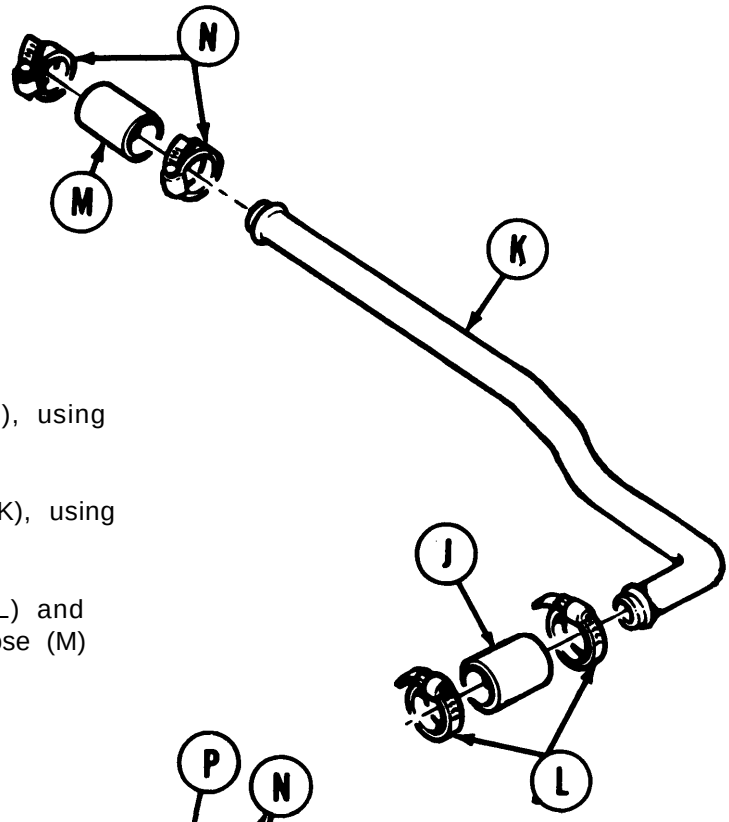

6. Install new hose (J) to breather tube (K), using two clamps (L).

7. Install new hose (M) to breather tube (K), using two clamps (N).

8. Using screwdriver, tighten one clamp (L) and one clamp (N) to secure hose (J) and hose (M) to breather tube (K).

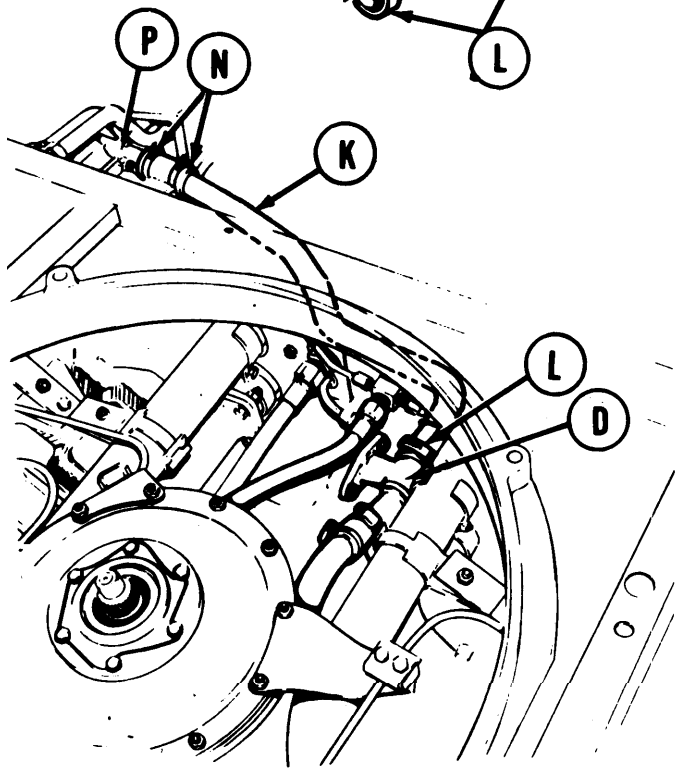

NOTE

If your vehicle is equipped with a 2DA engine, install breather tube (K) to breather tee (D) only.

9. Install breather tube (K) to breather tee (D) and exhaust tube (P).

NOTE

Do not tighten clamps (N) if vehicle is equipped with a 2DA engine.

10. Using screwdriver, tighten clamps (N) and (L).

CRANKCASE BREATHER TEE AND REAR TUBE REPLACEMENT (Sheet 6 of 6)

NOTE

Perform step 11 through 15 only if your vehicle is equipped with a 2DA engine.

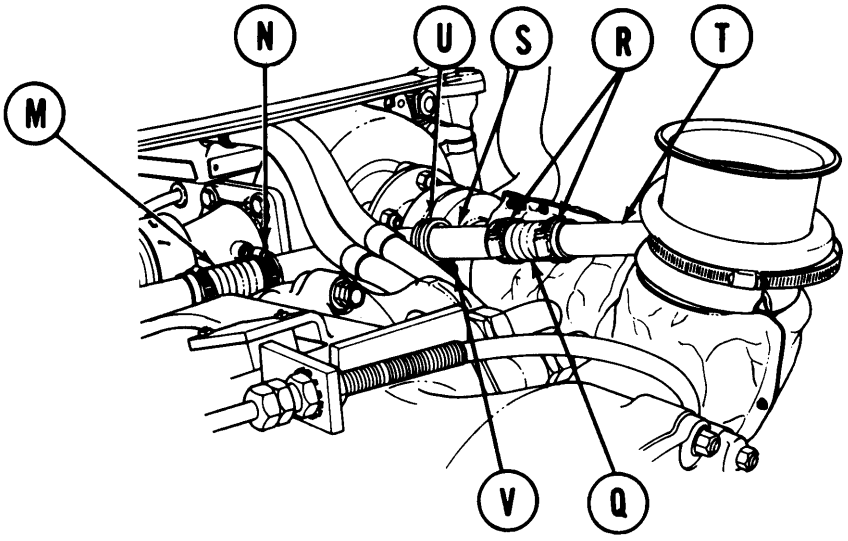

11. Install new hose (Q) and clamps (R) onto engine breather tube extension (S).

12. Install end of engine breather tube extension (S) into hose (M). Install hose end of breather tube extension (S) onto left ejector tube (T).

13. Slide clamps (R) and (N) over hoses (M) and (Q). Using screwdriver, tighten clamps (R) and (N).

14. Install clamp (U) onto engine breather tube extension (S).

15. Using two wrenches, install screw and new self-locking nut (V) to secure clamp (U) to bracket on left ejector tube (T).

16. Install rear engine cooling fan (page 9-57).

17. Install transmission shroud (page 9-6).

18. Install top deck (page 16-23).

End of Task

MULTIPLE FLUID PRESSURE LINE CONNECTOR REPLACEMENT (Sheet 1 of 6)

PROCEDURE INDEX

PROCEDURE	PAGE
Removal	6-101
Inspection	6-103
Installation	6-103

TOOLS: 1-1/8 in. deep well socket with 1/2 in. drive
1/2 in. socket with 1/2 in. drive
11/16 in. combination box and open end wrench
1 in. combination box and open end wrench
1-1/8 in. combination box and open end wrench
Flat-tip screwdriver
Ratchet with 1/2 in. drive

SPECIAL TOOLS: Ground hop kit (Item 31, Chapter 3, Section 1)

PRELIMINARY PROCEDURES: Remove powerplant (page 5-2)
Remove rear engine cooling fan (page 9-55)

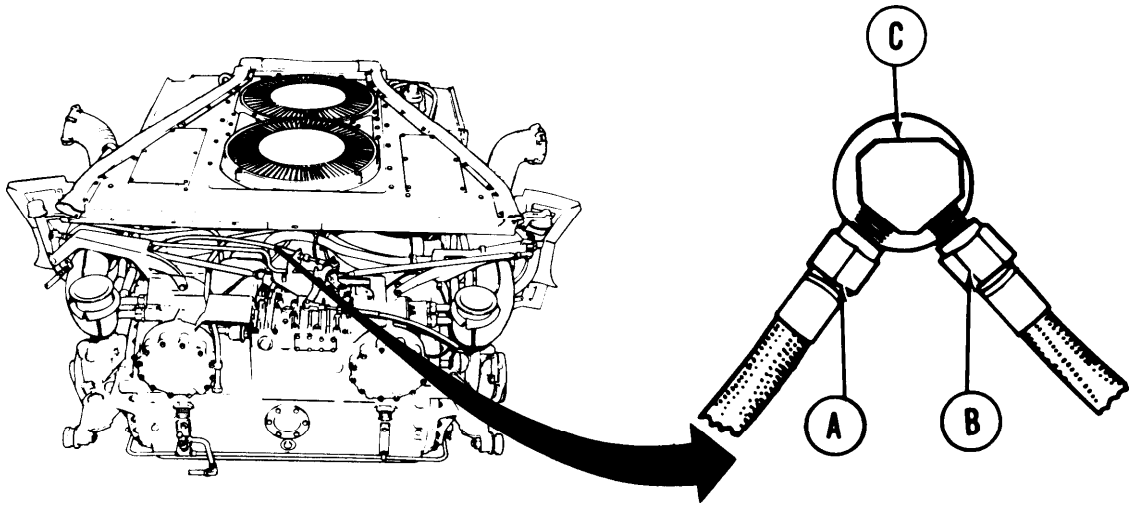

REMOVAL:

1. Using 11/16 inch wrench, disconnect hoses (A) and (B) from connector (C).

Go on to Sheet 2

TA248092

MULTIPLE FLUID PRESSURE LINE CONNECTOR REPLACEMENT (Sheet 2 of 6)

2. Using 1 inch wrench, loosen hose connector (D) while holding retaining nut (E) with 1-1/8 inch open end wrench.

3. Remove hose (F) from connector (G).

4. Using 1-1/8 inch deep well socket wrench, remove retaining nut (E) and washer from connector (G).

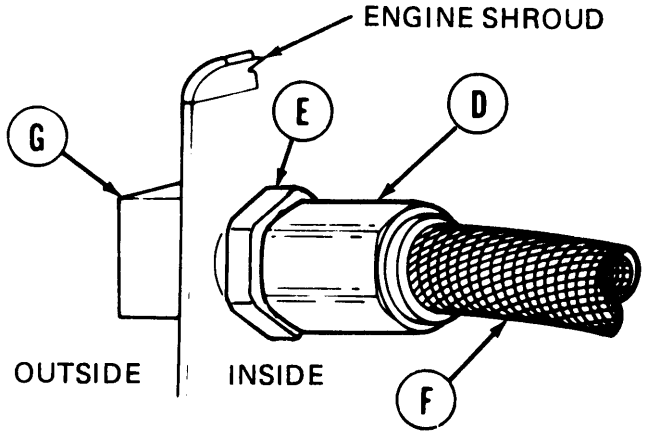

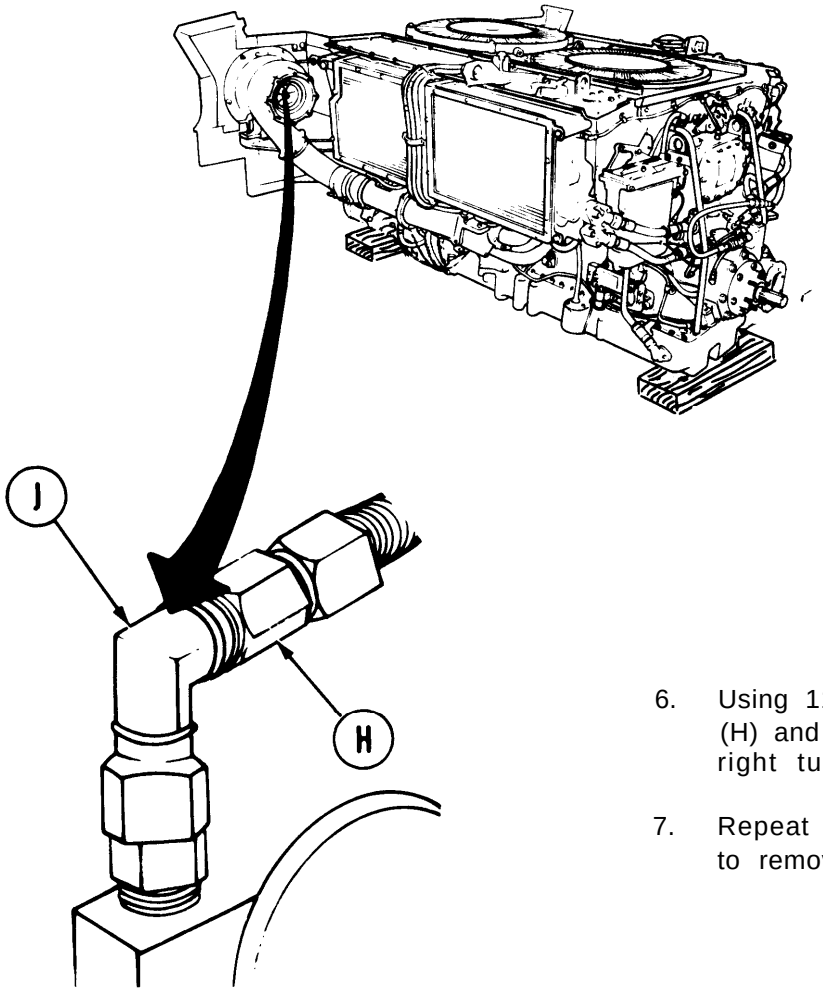

6. Using 11/16 inch wrench, loosen hose (H) and remove from elbow (J) on the right turbosupercharger.

7. Repeat step 6 on left turbosupercharger to remove other hose.

Go on to Sheet 3

TA248093

MULTIPLE FLUID PRESSURE LINE CONNECTOR REPLACEMENT (Sheet 3 of 6)

8. Using 1/2 inch socket, remove loop clamp (K) that secures left hose (L) to engine shroud.

9. Using 1/2 inch socket, remove loop clamp (K) that secures right hose (M) to engine shroud.

10. Remove hose grommets from left and right side engine shrouds.

11. Remove hoses (M) and (L) to inside.

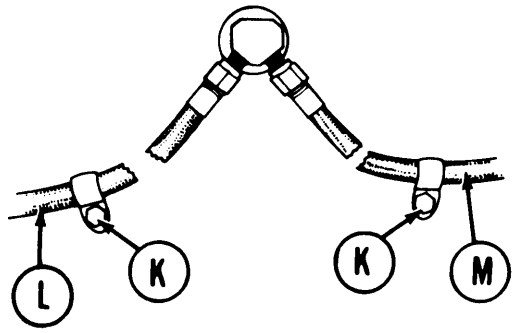

INSPECTION:

1. Check hoses for cracks, holes and leaks.

2. Check hose connectors for stripped threads and wear.

3. Check loop clamps for serviceability.

4. Replace parts as needed.

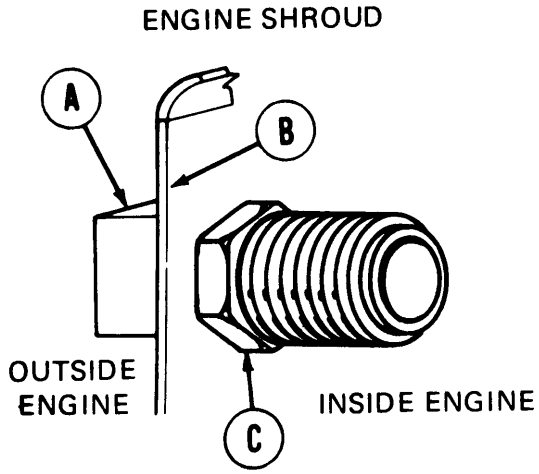

INSTALLATION:

1. Position connector (A) in engine shroud (B).

2. Using 1-1/8 inch deep well socket, secure connector (A) with flat washer and retaining nut (C).

TA248094

Go on to Sheet 4

MULTIPLE FLUID PRESSURE LINE CONNECTOR REPLACEMENT (Sheet 4 of 6)

3. Connect hose (D) to connector (A).

4. Using 1 inch wrench, tighten hose connector (D). Make sure connector (A) is installed with hose fittings pointed down.

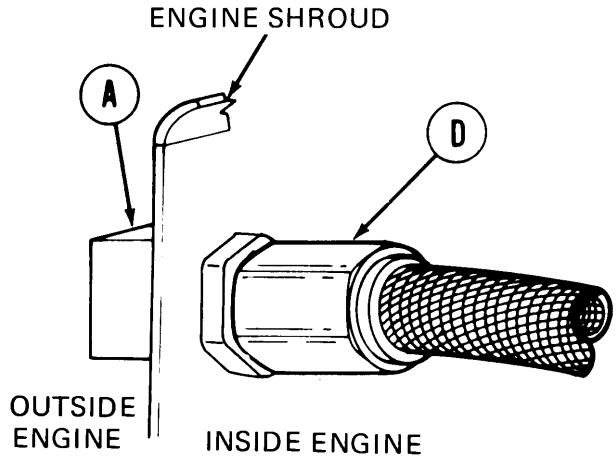

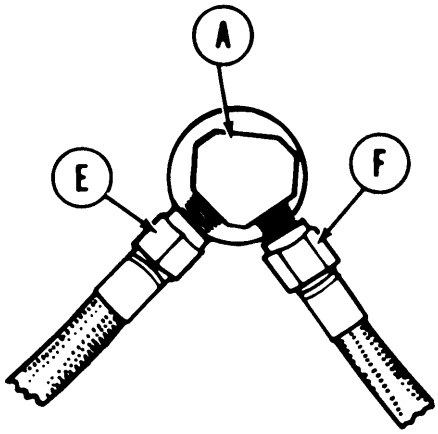

5. Connect hoses (E) and (F) to connector (A).

6. Using 11/16 inch wrench, tighten connectors (E) and (F).

7. Position hose (F) so that free end passes through right engine shroud. Using fingers and flat-tip screwdriver position grommet (G) over hose and into shroud.

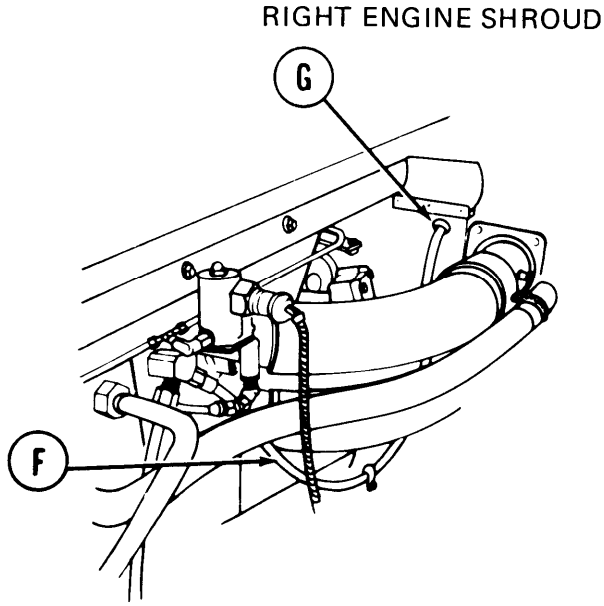

Go on to Sheet 5

TA248095

MULTIPLE FLUID PRESSURE LINE CONNECTOR REPLACEMENT (Sheet 5 of 6)

8. Position hose (E) so that free end passes through left engine shroud. Using fingers and flat-tip screwdriver, position grommet (H) over hose and into shroud.

9. Using 1/2 inch wrench and 1/2 inch socket, secure each hose with loop clamp.

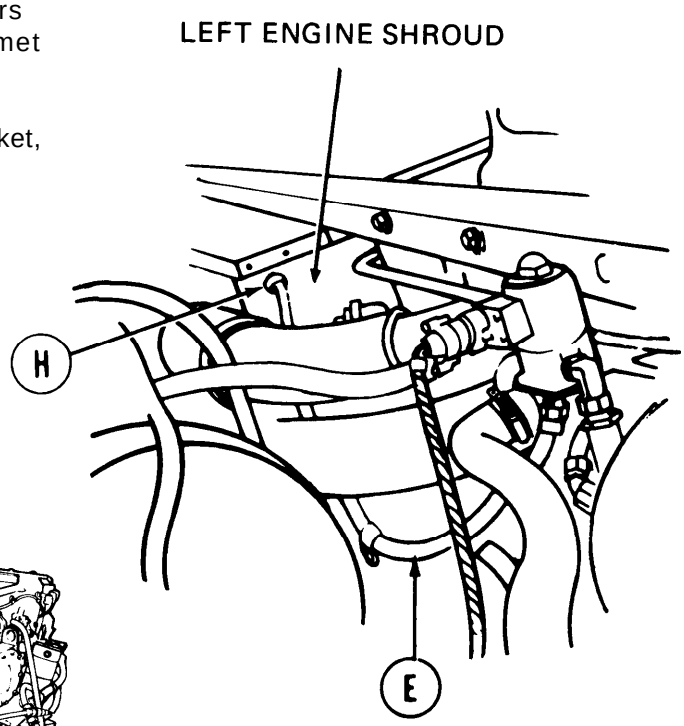

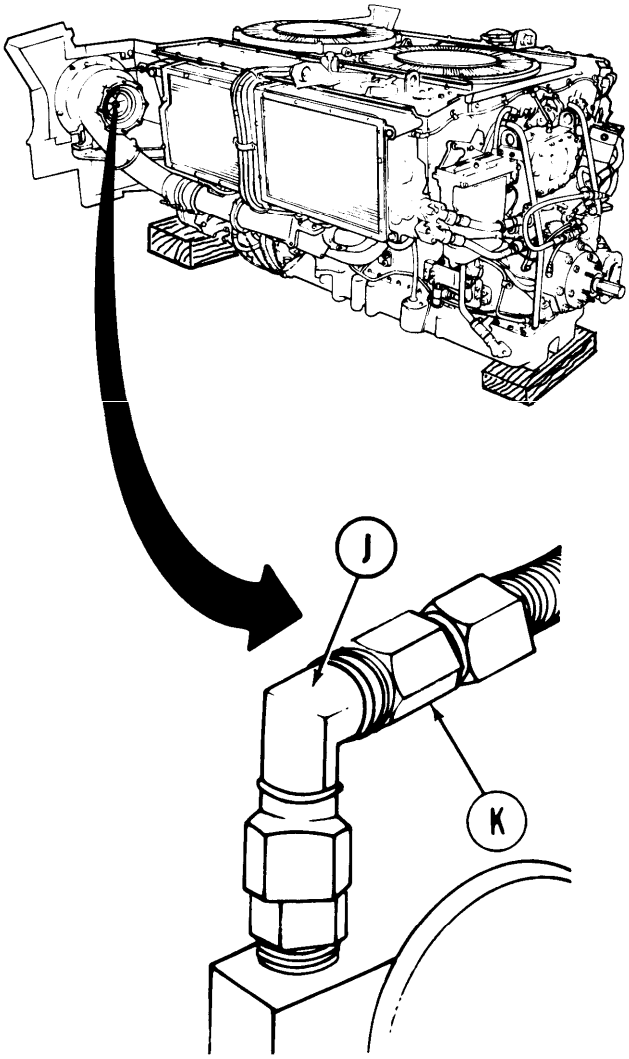

10. Using 11/16 inch wrench, connect hose connector (K) to elbow (J) on right turbosupercharger.

11. Repeat step 10 on left turbosupercharger to connect hose (E).

Go on to Sheet 6

TA248096

MULTIPLE FLUID PRESSURE LINE CONNECTOR REPLACEMENT (Sheet 6 of 6)

CAUTION

Do not operate powerplant longer than ten minutes with cooling fans removed. Engine speed should not exceed 750 RPM.

12. Ground hop powerplant (page 5-25).
13. Check all connections for leaks.
14. Turn engine off.
15. Disconnect ground hop equipment (page 5-40).
16. Install rear engine cooling fan (page 9-57).
17. Install powerplant (page 5-14).

End of Task

ENGINE ACCESS COVERS (RIGHT BANK) REPLACEMENT (Sheet 1 of 5)

PROCEDURE INDEX

PROCEDURE	PAGE
Removal	6-107
Installation	6-110

TOOLS: 1/2 in. socket with 1/2 in. drive
4 in. extension with 1/2 in. drive
Ratchet with 1/2 in. drive
9/16 in. combination box and open end wrench
11/16 in. open end wrench

SUPPLIES: Rags (Item 65, Appendix D)
Drain pan

PRELIMINARY PROCEDURES: Remove powerplant (page 5-2)
Remove engine shroud (page 9-30)

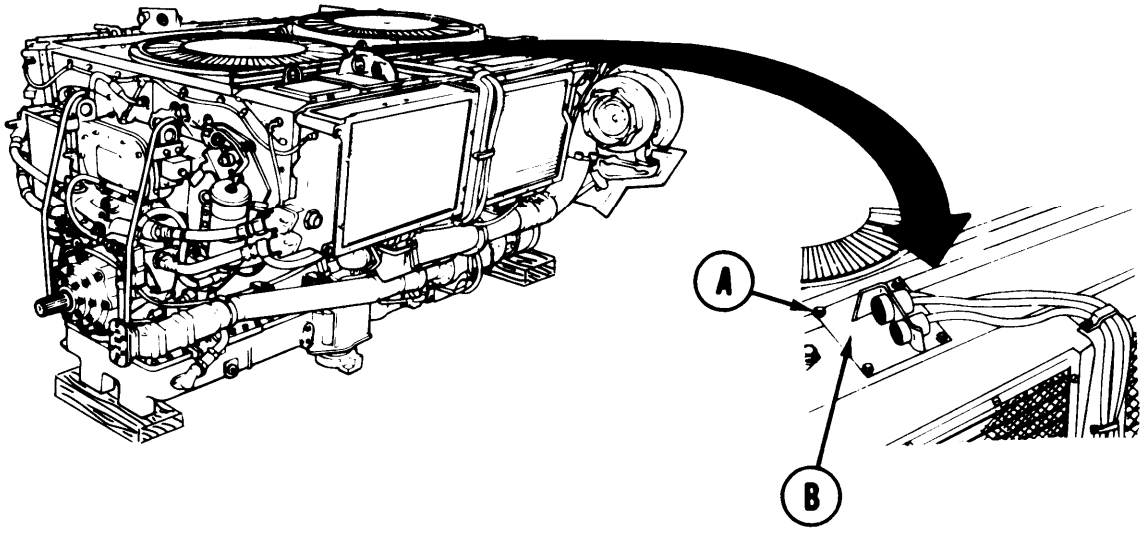

REMOVAL:

1. Using socket, remove four screws and washers (A) securing plate with electrical connectors (B) to front engine access cover.

2. Place plate with electrical connectors (B) aside.

Go on to Sheet 2

TA248097

ENGINE ACCESS COVERS (RIGHT BANK) REPLACEMENT (Sheet 2 of 5)

3. Using socket, remove remaining six screws and washers (C) securing front engine access cover (D).

4. Remove front engine access cover (D).

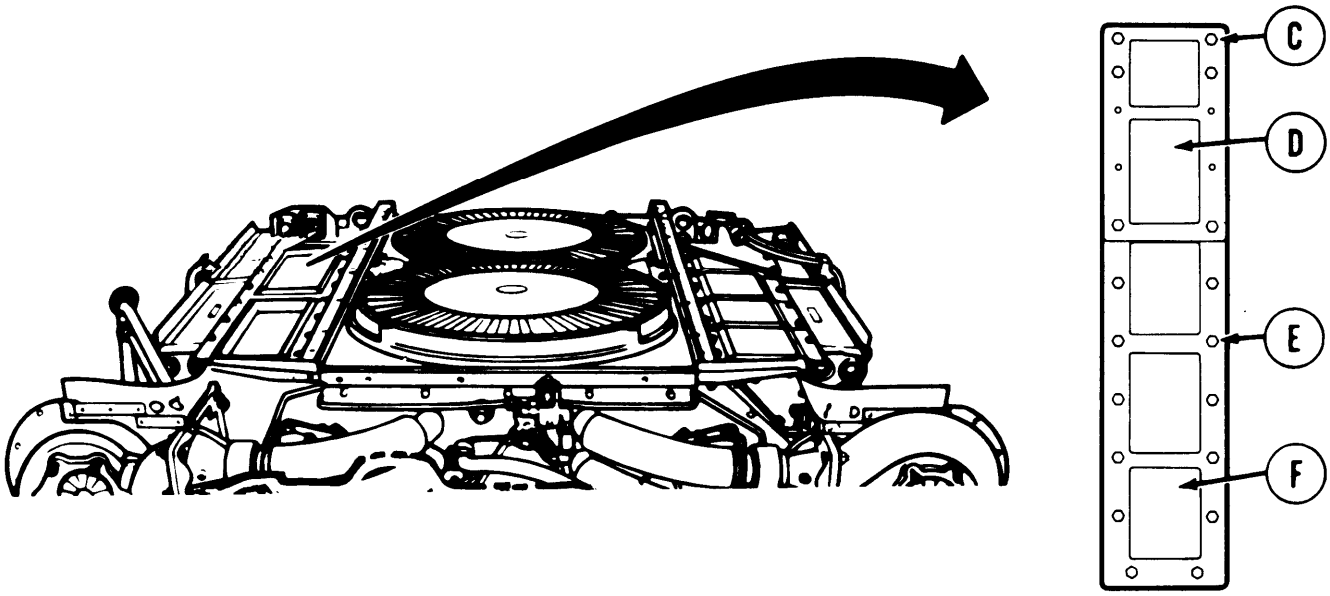

5. Using socket, remove remaining 12 screws and washers (E) securing rear engine access cover (F).

6. Remove rear engine access cover (F).

Go on to Sheet 3

TA248098

ENGINE ACCESS COVERS (RIGHT BANK) REPLACEMENT (Sheet 3 of 5)

7. Using socket, remove three screws, washers and clamp (G) securing timing access cover (H) to engine.

8. Remove timing access cover (H).

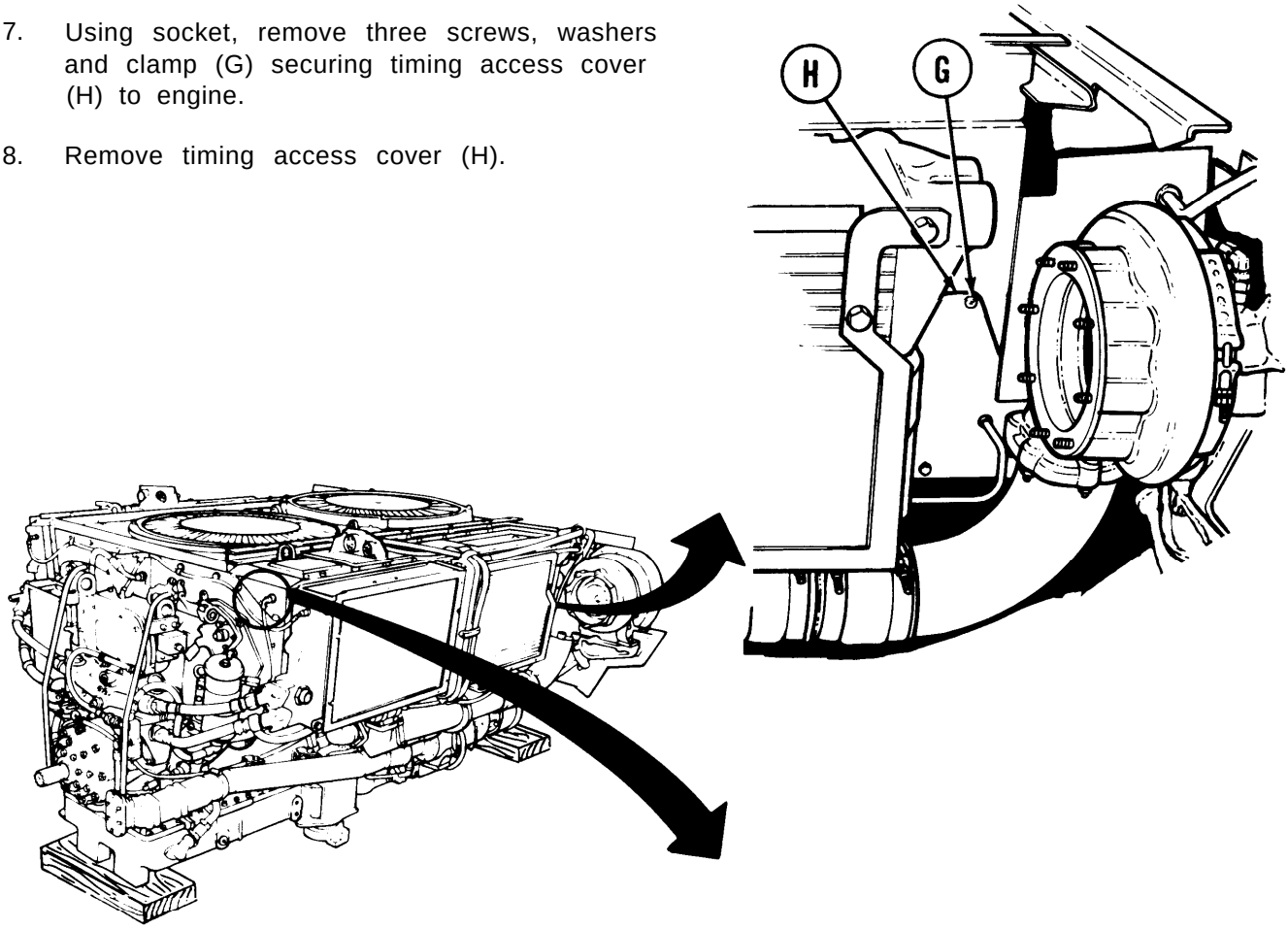

NOTE

Use a suitable container or rags to catch fuel leakage when any fuel line or fitting is loosened or disconnected.

9. Using 9/16 inch wrench, disconnect fuel return hose fitting (J) from nipple (K).

10. Using 11/16 inch wrench, remove nut (L) securing nipple (K) to access cover (M).

11. Pull nipple (K) with hose attached out of access cover. (Pull nipple and hose toward rear of engine).

12. Using socket and extension, remove three screws and washers (N).

13. Remove access cover (M).

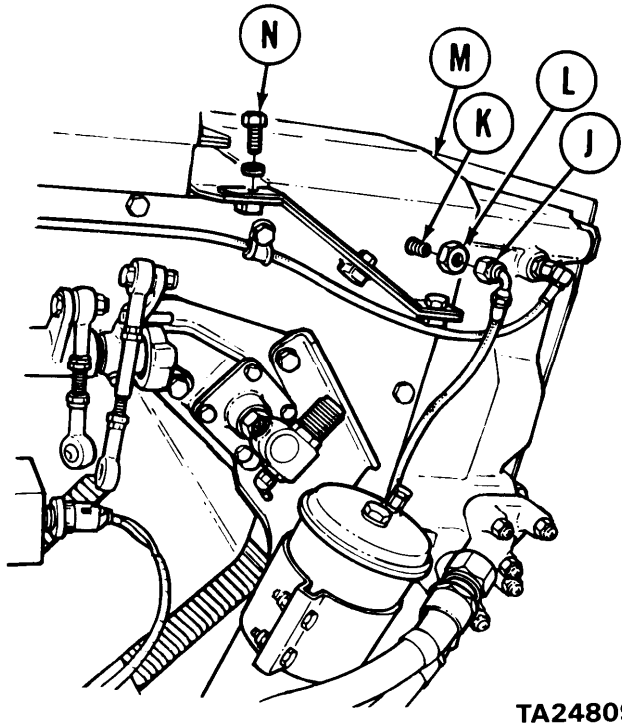

TA248099

Go on to Sheet 4

ENGINE ACCESS COVERS (RIGHT BANK) REPLACEMENT (Sheet 4 of 5)

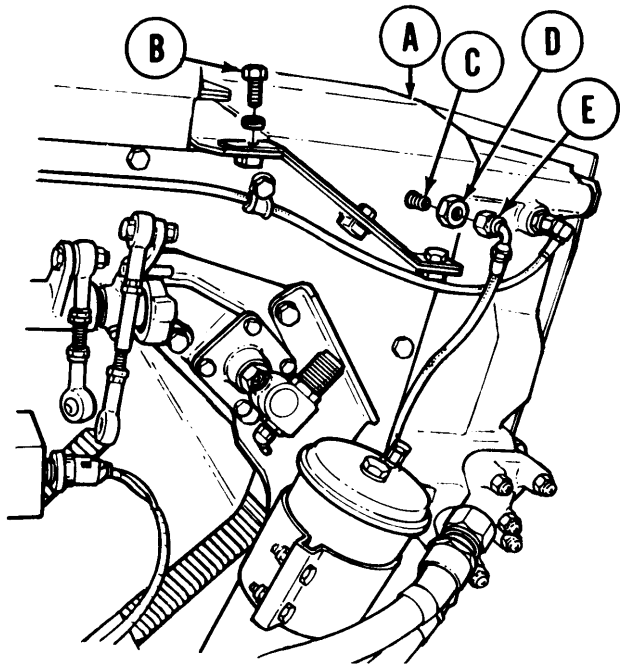

INSTALLATION:

1. Position access cover (A) in place on engine.
2. Install three screws and washers (B) to secure access cover.
3. Using socket and extension, tighten three screws (B).
4. Install nipple (C) with hose attached in access cover (A).
5. Install nut (D) onto nipple (C). Using 11/16 inch open end wrench, tighten nut (D).
6. Connect fuel return hose fitting (E) to nipple (C). Using 9/16-inch open end wrench, tighten hose fitting (E).

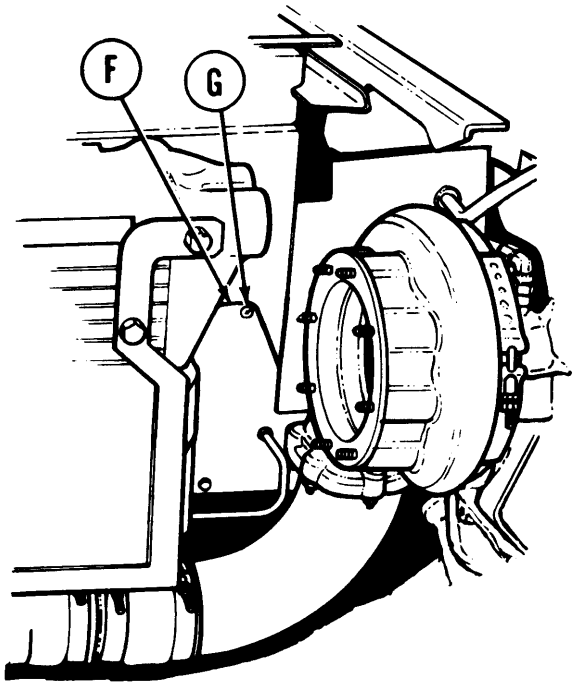

7. Position timing access cover (F) in place on engine.
8. Install three screws and washers (G) to secure timing access cover (F) and hose clamp on engine. Using socket, tighten three screws (G).

Go on to Sheet 5

TA248100

ENGINE ACCESS COVERS (RIGHT BANK) REPLACEMENT (Sheet 5 of 5)

9. Position rear engine access cover (H) in place on engine.

10. Install 12 screws and washers (J). Do not install screws in last holes toward front of engine. Using socket, tighten 12 screws (J).

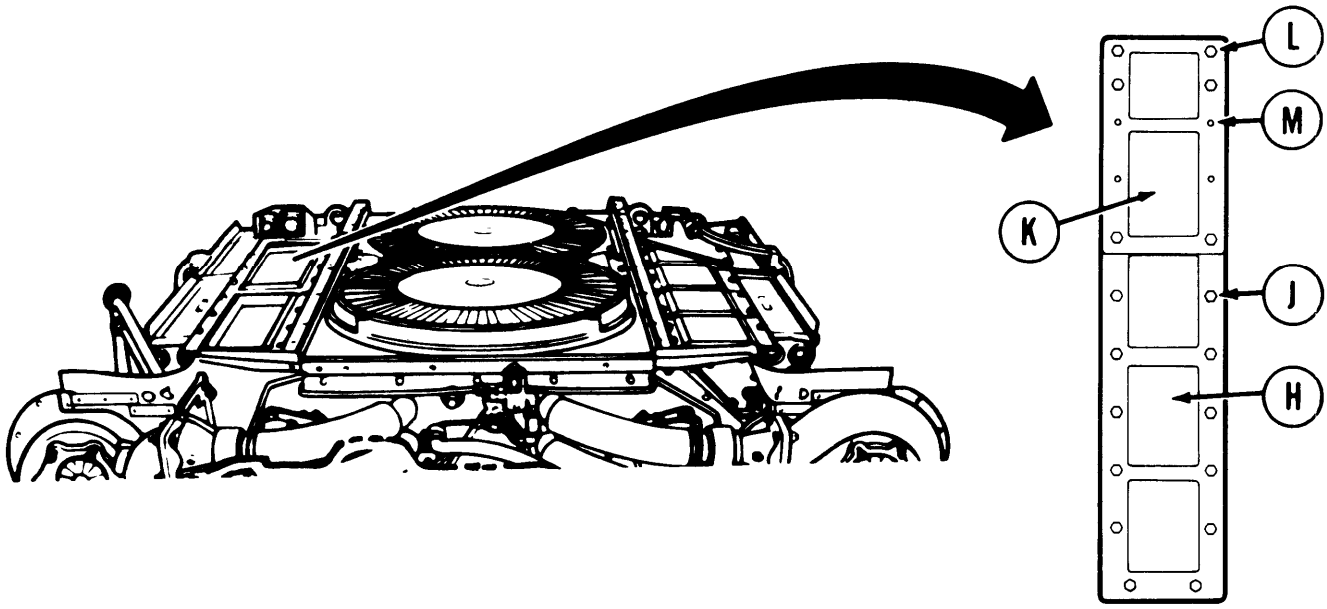

11. Position front engine access cover (K) in place on engine.

12. Install six screws and washers (L). Do not install screw in the four holes (M). Using socket, tighten six screws (L).

13. Position plate with electrical connector (N) on front engine access cover (K). Aline screw holes in plate (N) with those in front engine access plate (K).

14. Install four screws and washers (P) to secure plate to cover (K). Using socket, tighten four screws (P).

15. Install engine shroud (page 9-31).

16. Install powerplant (page 5-14).

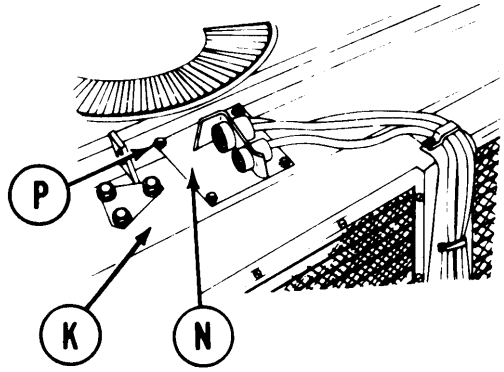

End of Task

TA248101

ENGINE ACCESS COVERS (LEFT BANK) REPLACEMENT (Sheet 1 of 5)

PROCEDURE INDEX

PROCEDURE	PAGE
Removal	6-112
Installation	6-115

TOOLS: 1/2 in. socket with 1/2 in. drive
Ratchet 1/2 in. drive
3" extension, 1/2 in. drive
1/2 in. combination wrench

SUPPLIES: Gasket

PRELIMINARY PROCEDURES: Remove powerplant (page 5-2).
Remove engine shroud (page 9-30)

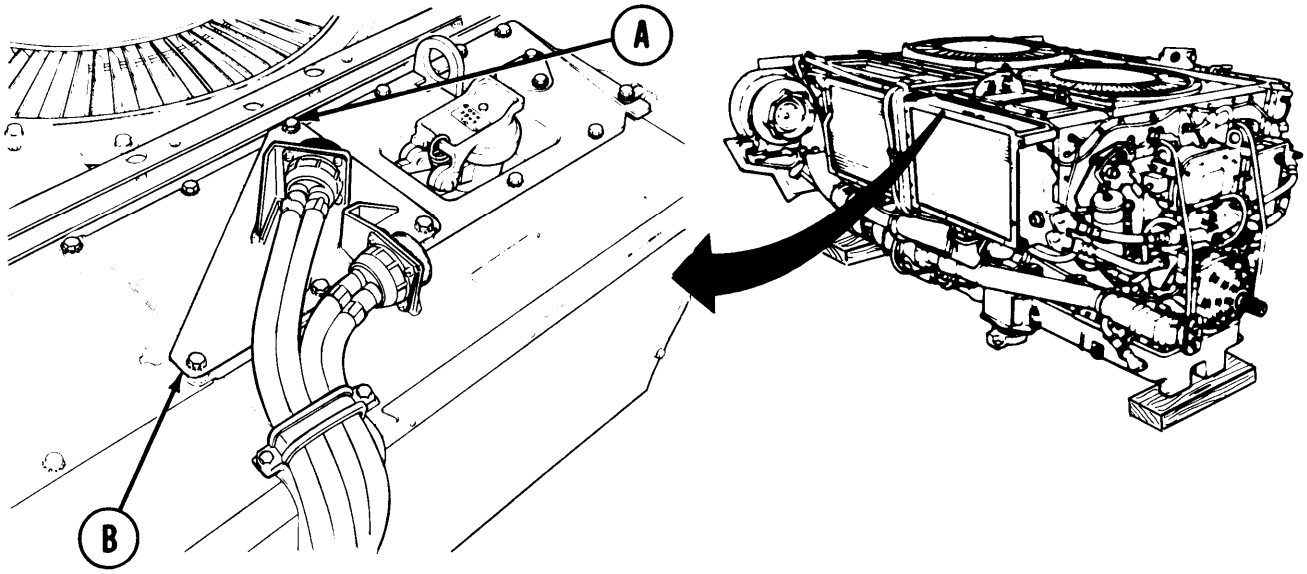

REMOVAL:

1. Using socket, remove four screws and washers (A) securing plate with electrical connectors (B).

2. Position plate with electrical connectors (B) aside.

Go on to Sheet 2

TA248102

ENGINE ACCESS COVERS (LEFT BANK) REPLACEMENT (Sheet 2 of 5)

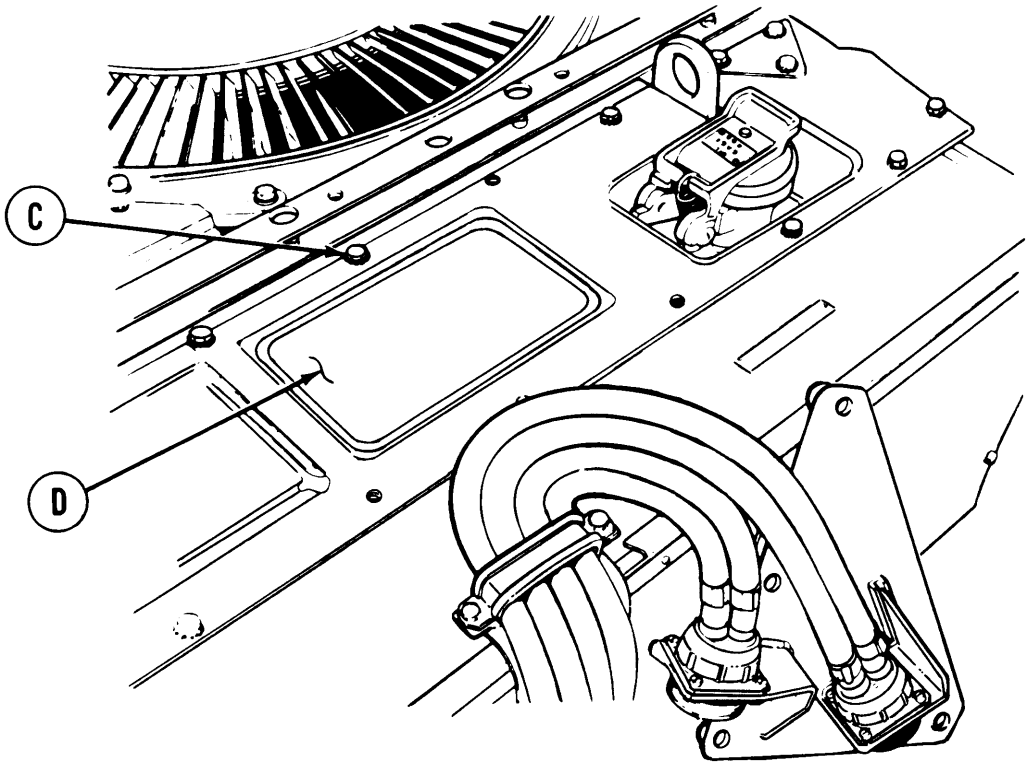

3. Using socket, remove nine screws and washers (C).

4. Remove front engine access plate (D) with cap assembly (G).

5. Using socket, remove two screws (E) and lockwashers (F).

6. Remove cap assembly (G) and gasket (H) from access plate (D). Throw gasket (H) away.

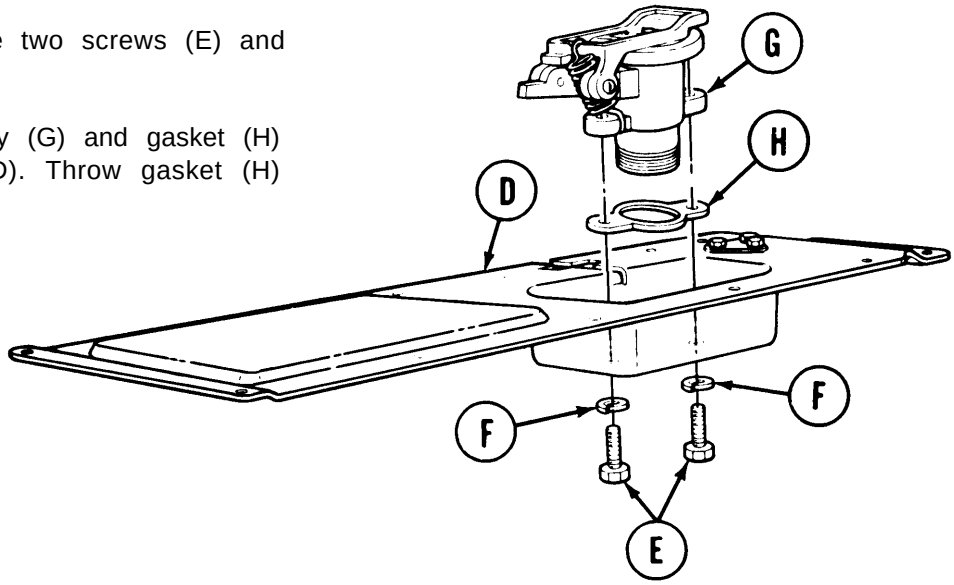

TA248103

Go on to Sheet 3

ENGINE ACCESS COVERS (LEFT BANK) REPLACEMENT (Sheet 3 of 5)

8. Using socket, remove ten screws and washers (J).

9. Remove rear engine access cover (K).

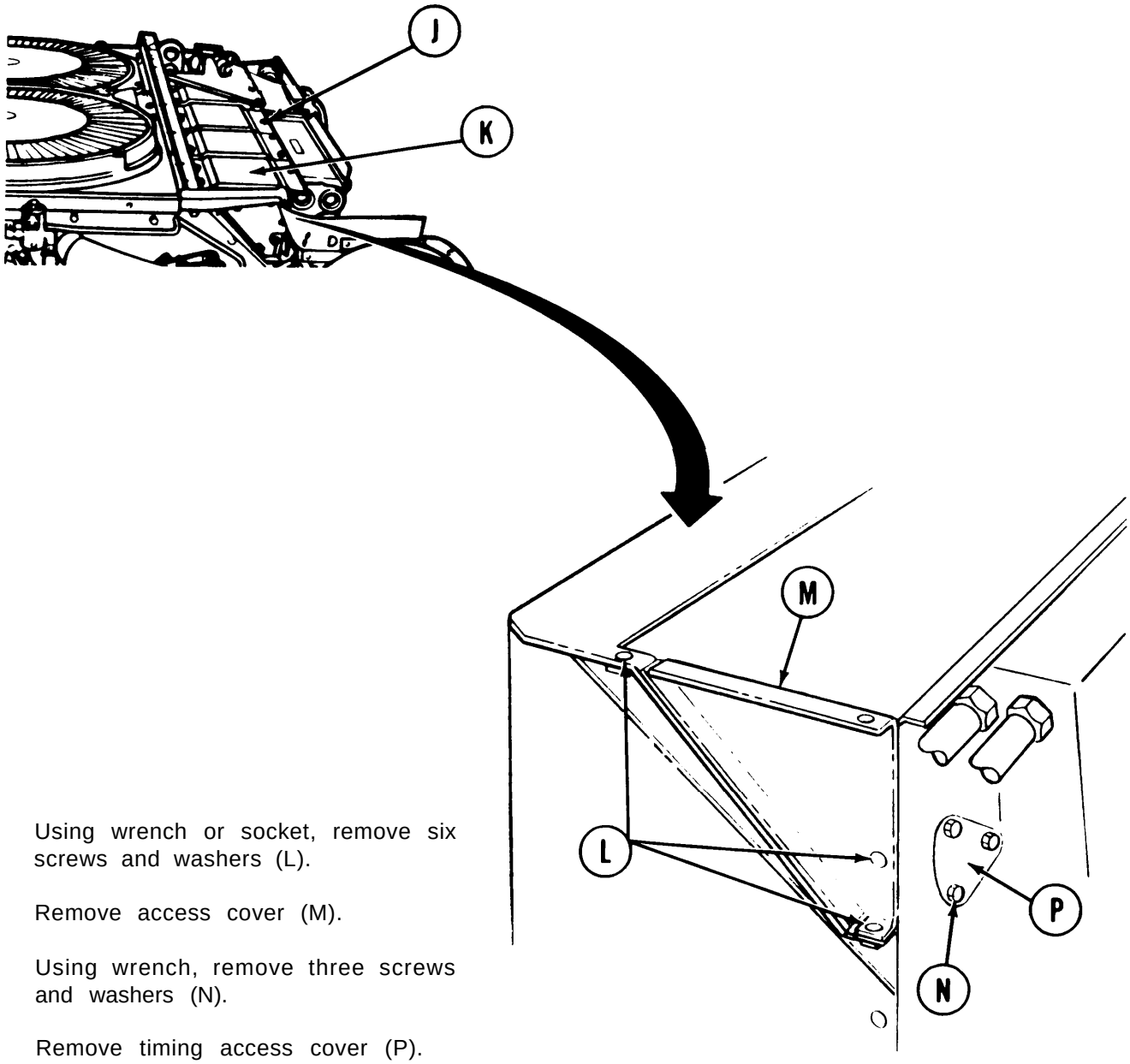

10. Using wrench or socket, remove six screws and washers (L).

11. Remove access cover (M).

12. Using wrench, remove three screws and washers (N).

13. Remove timing access cover (P).

Go on to Sheet 4

TA248104

ENGINE ACCESS COVERS (LEFT BANK) REPLACEMENT (Sheet 4 of 5)

INSTALLATION:

1. Position timing access cover (A) to engine.

2. Install three screws and washers (B) to secure timing cover (A) to engine. Using wrench, tighten screws.

3. Position access cover (C) in place on engine.

4. Install six screws and washers (D) to secure access cover (C). Using wrench or socket, tighten screws.

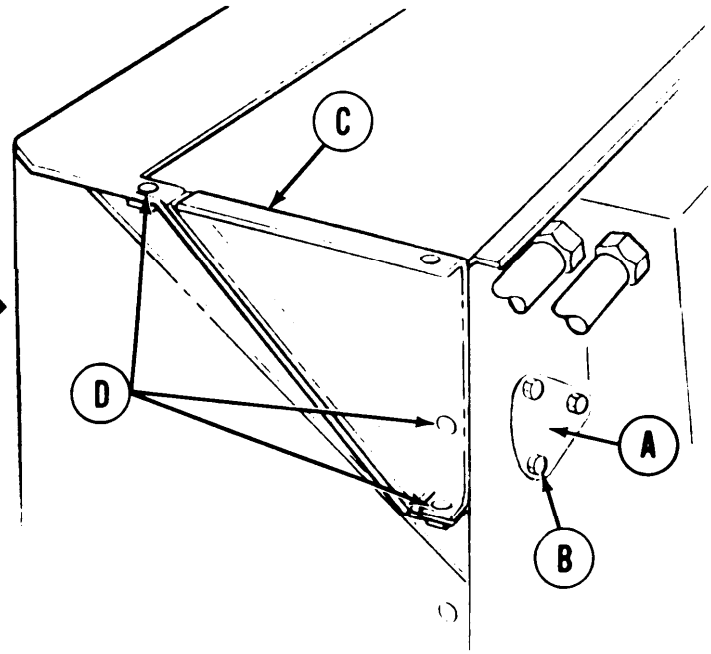

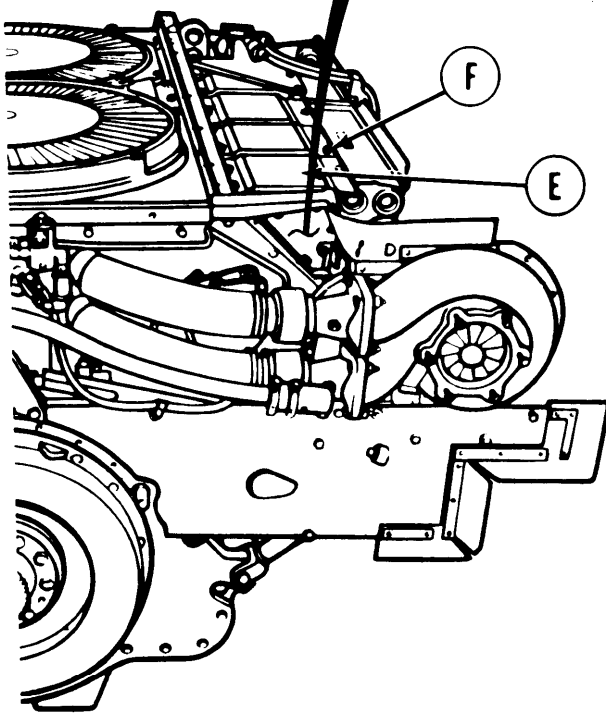

5. Position rear engine access cover (E) to engine.

6. Install ten screws and washers (F) to secure rear engine access cover (E). Do not install screws in last two holes toward front of engine.

7. Using socket, tighten screws (F).

Go on to Sheet 5

TA248105

ENGINE ACCESS COVERS (LEFT BANK) REPLACEMENT (Sheet 5 of 5)

8. Position new gasket (G) and cap assembly (H) to front engine access cover (J).

9. Install two screws (K) and washers (L) to secure cap assembly (H) to front engine access cover (J).

10. Using socket, tighten screws (K).

11. Position front engine access cover (J) and cap assembly (H) in place on engine.

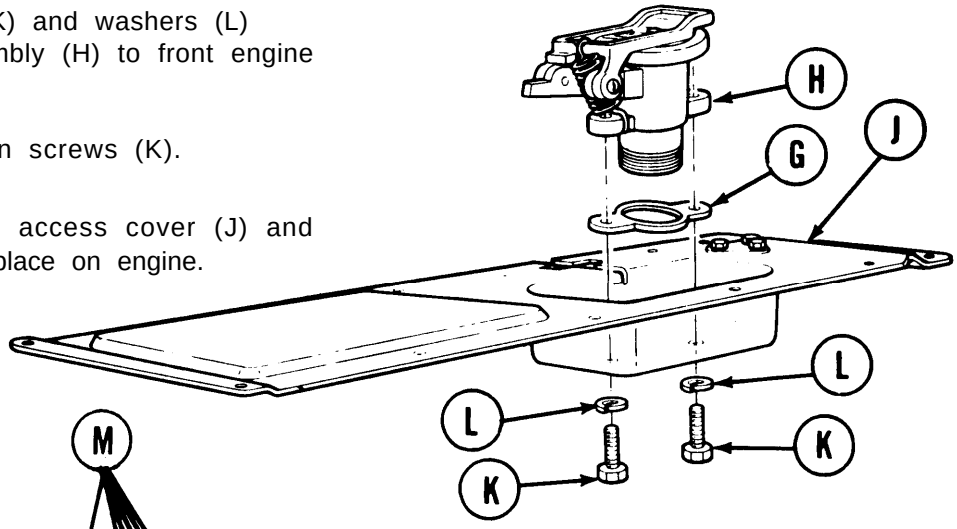

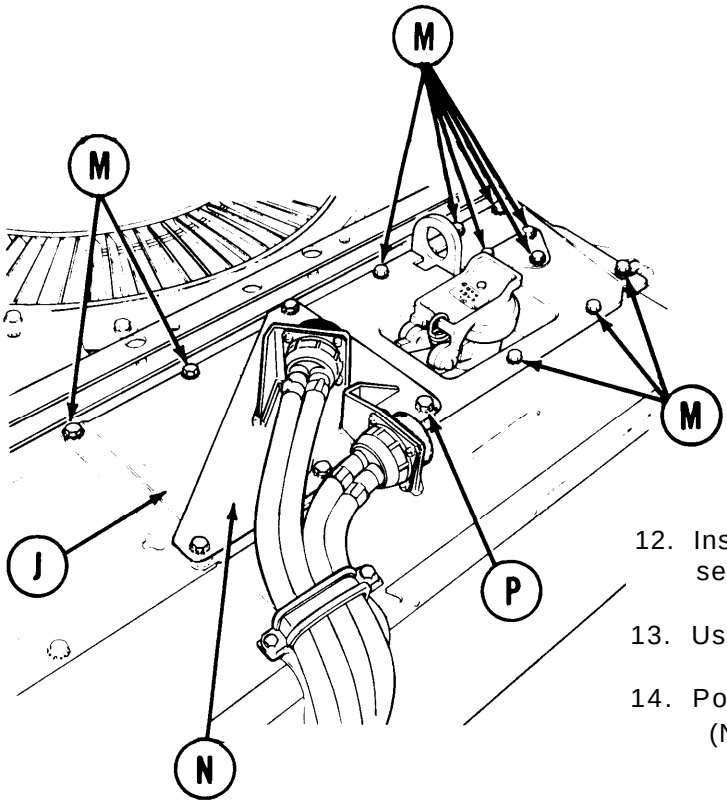

12. Install nine screws and washers (M) to secure front engine access cover.

13. Using socket, tighten screws (M).

14. Position plate with electrical connectors (N) on engine.

15. Install four screws and washers (P) to secure plate with electrical connectors (N).

16. Using socket, tighten screws (P).

17. Install engine shroud (page 9-3 1).

18. Install powerplant (page 5-14).

End of Task

TA248106

POWER PLANT RIGHT BANK OIL COOLER FRAME AND BRACKETS REPLACEMENT (Sheet 1 of 9)

PROCEDURE INDEX

PROCEDURE	PAGE
Removal	6-117
Inspection	6-121
Installation	6-121

TOOLS: Ratchet with 1/2 in. drive
6 in. extension with 1/2 in. drive
1/2 in. socket with 1/2 in. drive
9/16 in. socket with 1/2 in. drive
Alining punch
1/2 in. combination box and open end wrench
9/16 in. combination box and open end wrench
11/16 in. socket with 1/2 in. drive

SUPPLIES: Shims
Self-locking nuts

PERSONNEL: Two

PRELIMINARY PROCEDURES:
Remove powerplant (page 5-2)
Remove engine shroud (page 9-30
Remove engine right oil cooler (page 6-19)
Remove transmission right oil cooler (page 6-38)
Remove engine cooling fan shroud (page 9-47)
Remove engine cooling fans (page 9-55)
Remove centrifugal fan housings (page 9-64)
Remove access covers (right bank) (page 6-107)
Remove generator air exhaust pipe and hose (page 10-14)

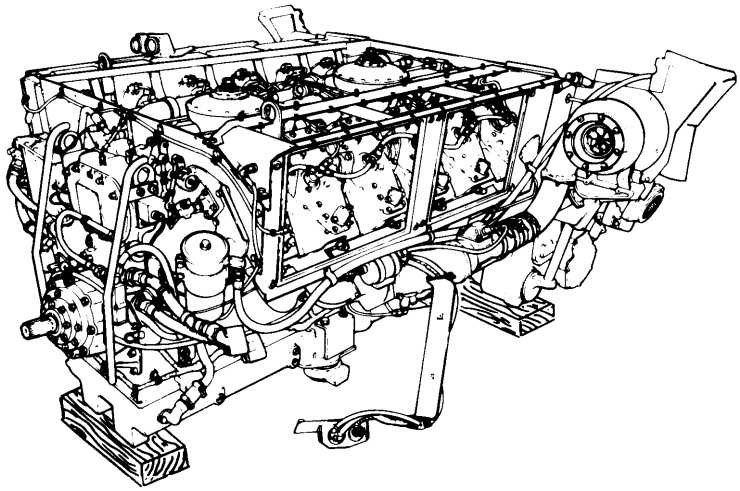

Go on to Sheet 2

TA248107

POWERPLANT RIGHT BANK OIL COOLER FRAME AND BRACKETS REPLACEMENT (Sheet 2 of 9)

NOTE

Because of space limitations, it may be necessary to interchange like-size sockets and wrenches to get at a particular screw.

REMOVAL:

1. Using 1/2 inch socket and extension, remove two assembled washerbolts and clamps (A).

2. Using 1/2 inch socket and extension remove washerbolt (B).

3. While supporting ignition unit (C), and using a 1/2 inch wrench, remove two capscrews (D

4. Remove ignition unit (C) with clamps and leads from frame.

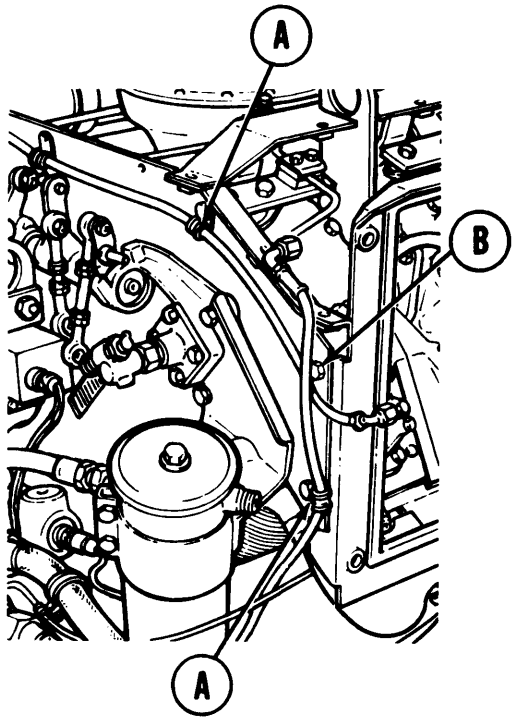

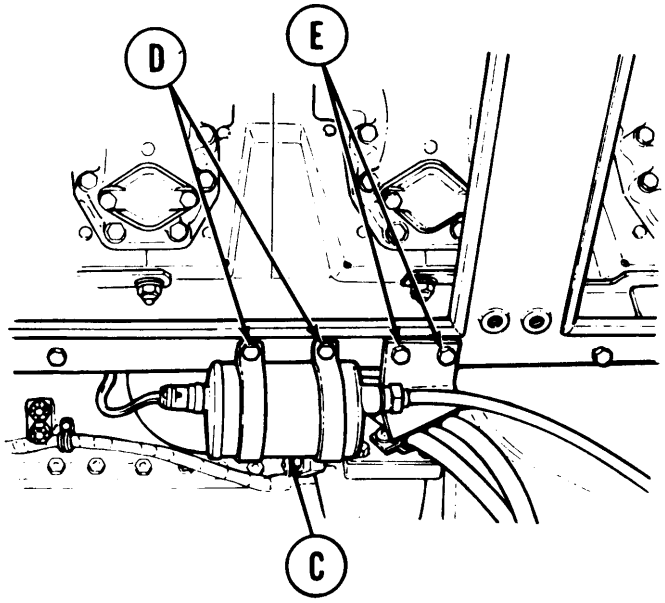

5. Using 1/2 inch socket, remove two capscrews (E) and self-locking nuts from bracket. Use 1/2 inch wrench to keep nuts from turning.

Go on to Sheet 3

TA248108

POWERPLANT RIGHT BANK OIL COOLER FRAME AND BRACKETS REPLACEMENT (Sheet 3 of 9)

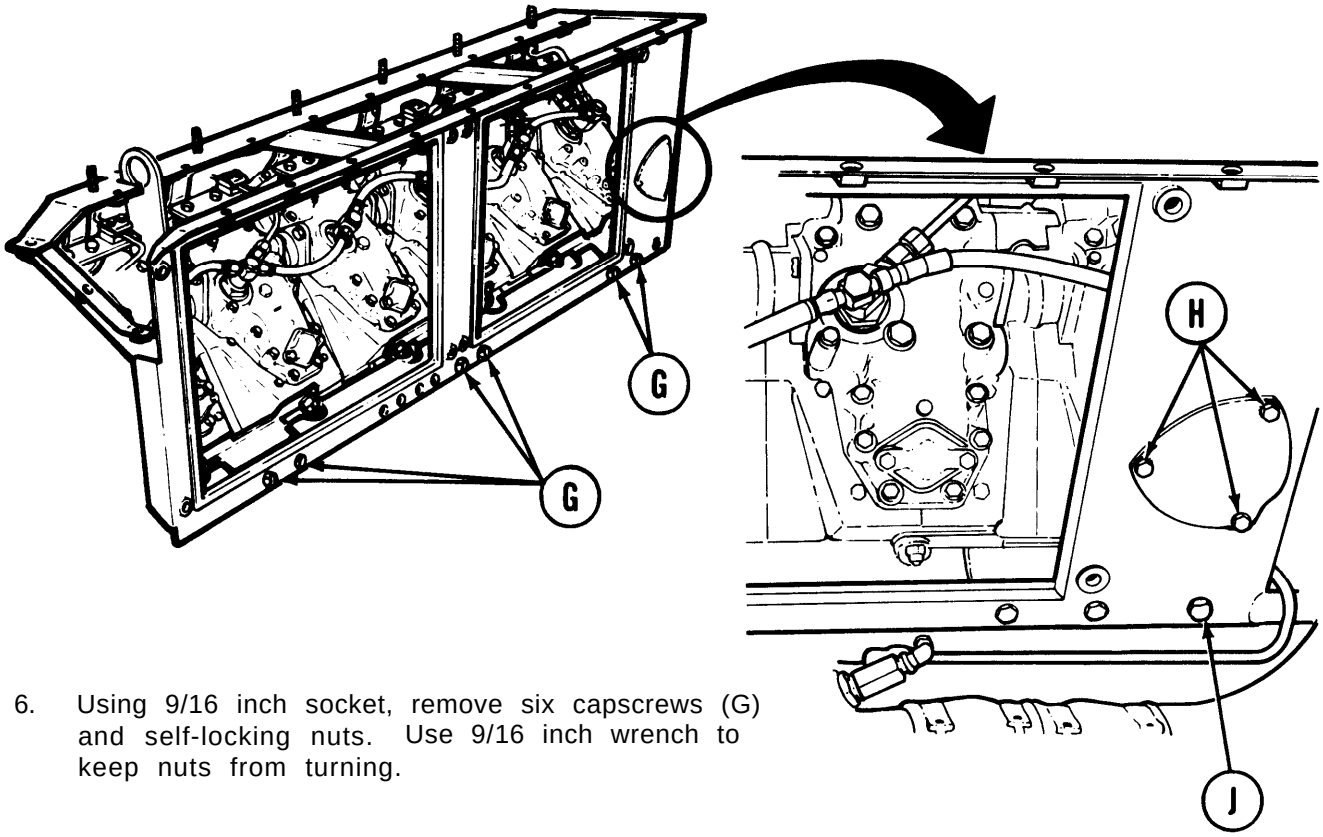

6. Using 9/16 inch socket, remove six capscrews (G) and self-locking nuts. Use 9/16 inch wrench to keep nuts from turning.

7. Using 1/2 inch socket, remove three screws (H) and clamp holding timing access cover to support frame.

8. Using 9/16 inch sockets remove capscrew, flatwasher and self-locking nut (J). Use 9/16 inch wrench to keep nut from turning.

9. Using 1/2 inch socket with extension or 1/2 inch wrench, remove five screws (K).

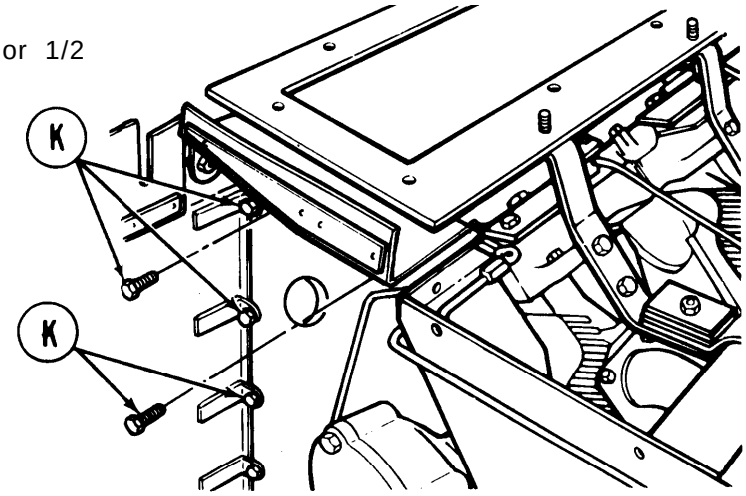

Go on to Sheet 4

TA248109

POWERPLANT RIGHT BANK OIL COOLER FRAME AND BRACKETS REPLACEMENT (Sheet 4 of 9)

NOTE

It may be necessary to depress three flanges (L) on frame bottom during removal to clear protruding obstacles on the engine.

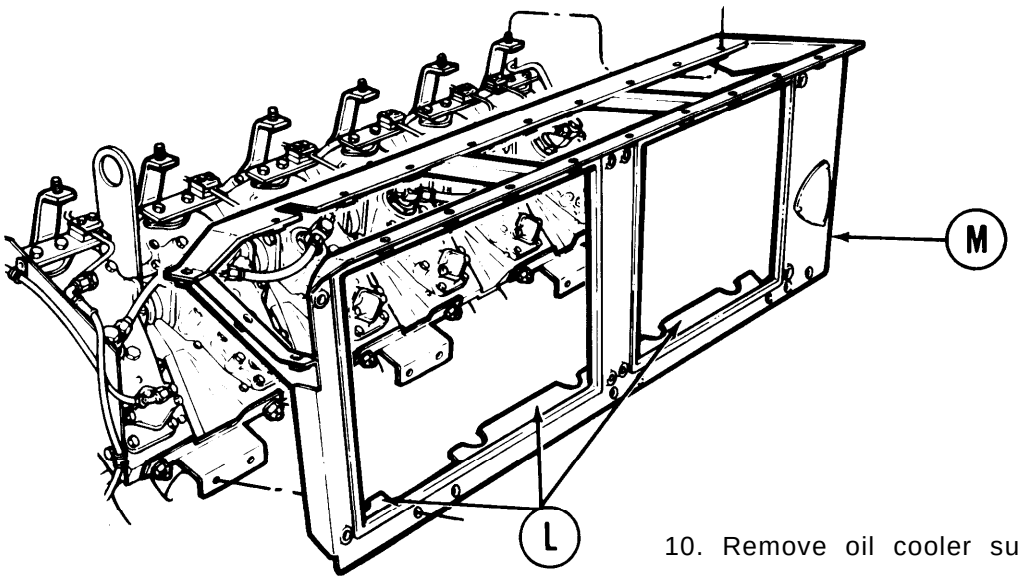

10. Remove oil cooler support frame (M).

NOTE

Five of the six cooler frame upper brackets are identical and are mounted the same way. The sixth bracket (N) is located closest to the engine flywheel end and requires three shims (P) and an additional screw and self-locking nut (Q) for proper installation.

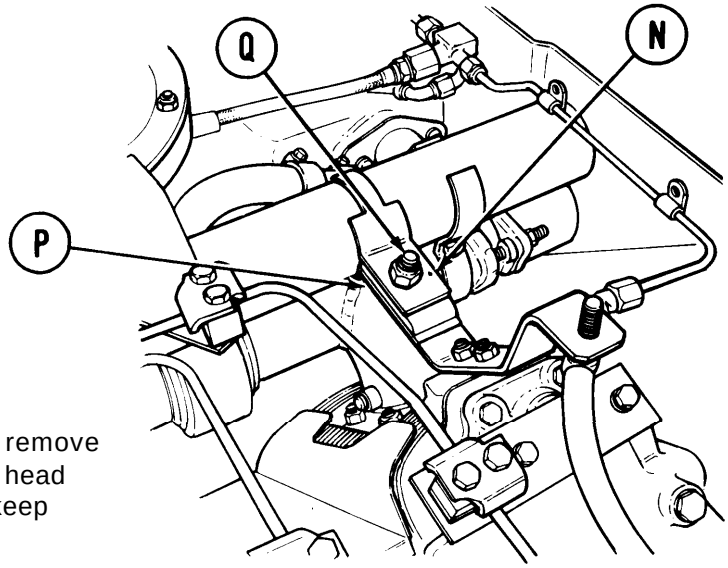

11. Using 9/16 inch socket with extension, remove nut (Q) securing shims (P). Hold screw head below shims with 9/16 inch wrench to keep screw from turning.

Go on to Sheet 5

TA248110

POWERPLANT RIGHT BANK OIL COOLER FRAME AND BRACKETS REPLACEMENT (Sheet 5 of 9)

12. Using 1/2 inch socket with extension or 1/2 inch wrench, remove six brackets (R).

13. Using 11/16 inch socket, remove two locknuts, washers, and spacers (S) from three frame support brackets (T). Remove frame support brackets (T).

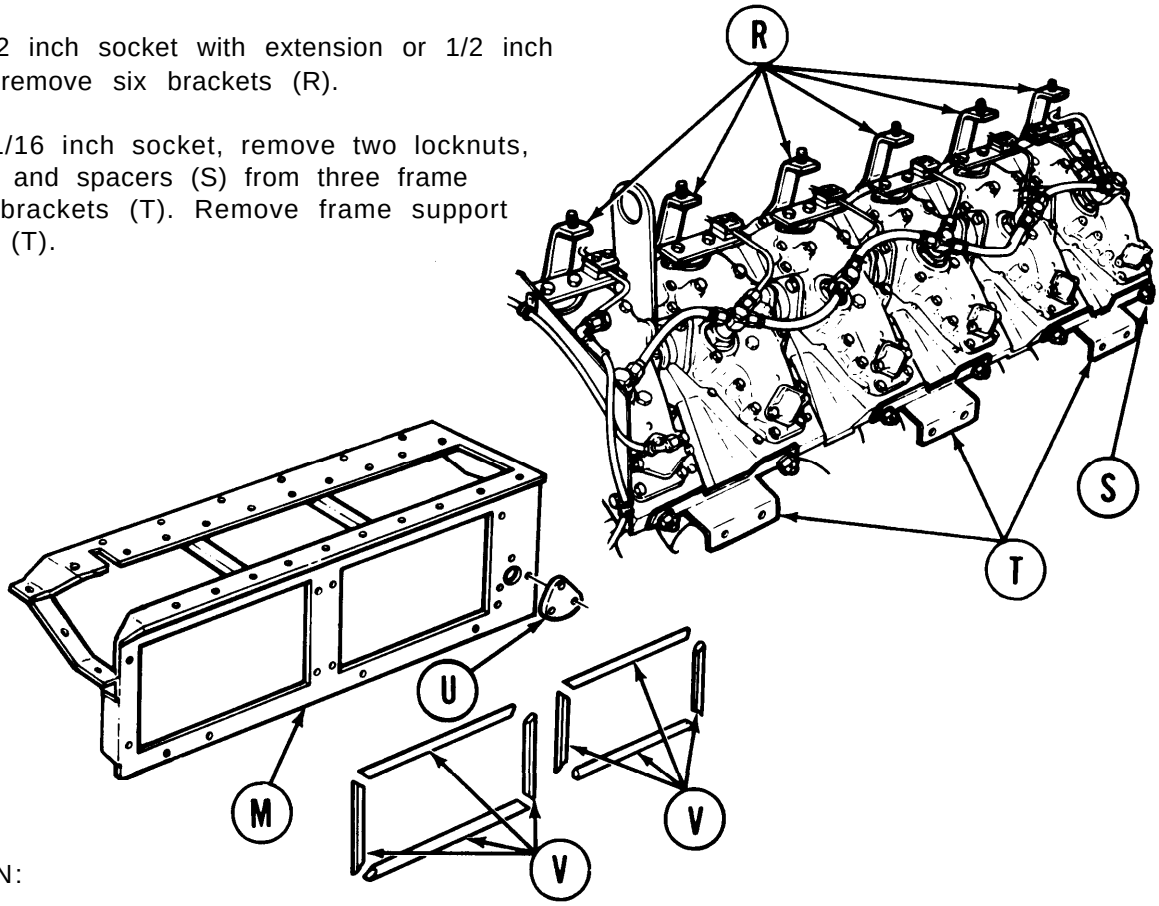

INSPECTION:

1. Check oil cooler support frame (M) for dents and breaks. Repair if possible or replace if necessary.

2. Check timing access cover (U) for breaks. Replace if necessary.

3. Check rubber strips (V) for tears and breaks. Replace if necessary.

4. Check brackets (R and T) for cracks and breaks. Replace if necessary.

INSTALLATION:

1. Position each frame support bracket (A) for mounting.

2. Using 11/16 inch socket, install two washers, spacers, and new locknut assemblies (B) to secure each bracket (A).

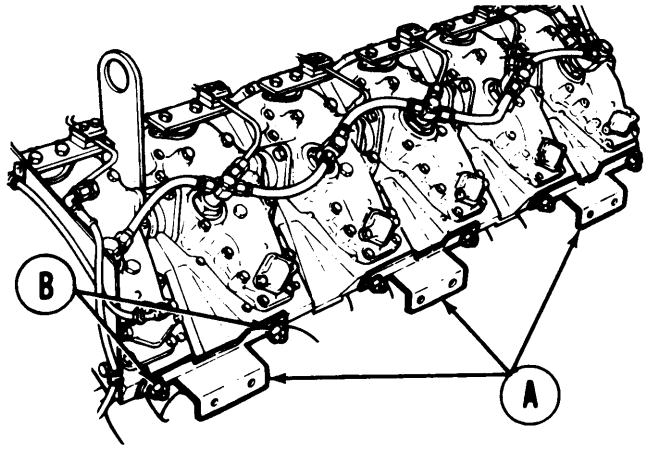

TA248111

Go on to Sheet 6

POWERPLANT RIGHT BANK OIL COOLER FRAME AND BRACKETS REPLACEMENT (Sheet 6 of 9)

NOTE

Five of the six cooler frame upper brackets are identical and are mounted the same way. The sixth bracket (C) is located closest to the engine flywheel end and requires shims and an additional screw and self-locking nut for proper installation.

3. Using 9/16 inch socket with extension, install shims (C). Hold screw head below shims with 9/16 inch wrench to keep screw from turning.

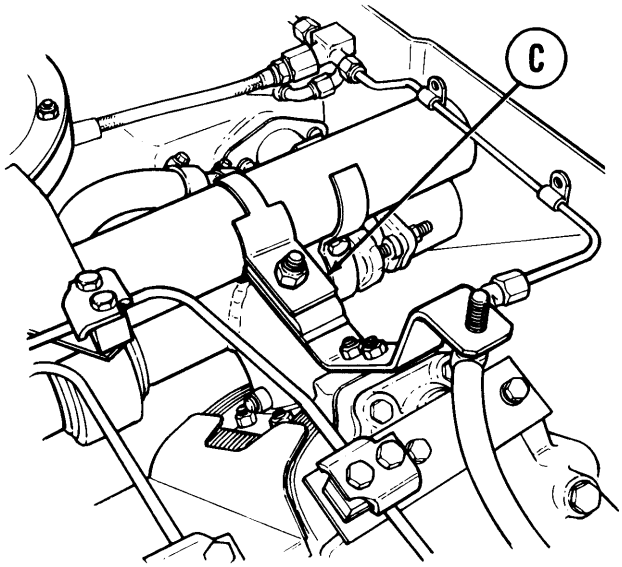

4. Using 1/2 inch socket with extension, install six brackets (D).

NOTE

It may be necessary to depress three flanges (E) on frame bottom during installation to clear protruding obstacles on the engine.

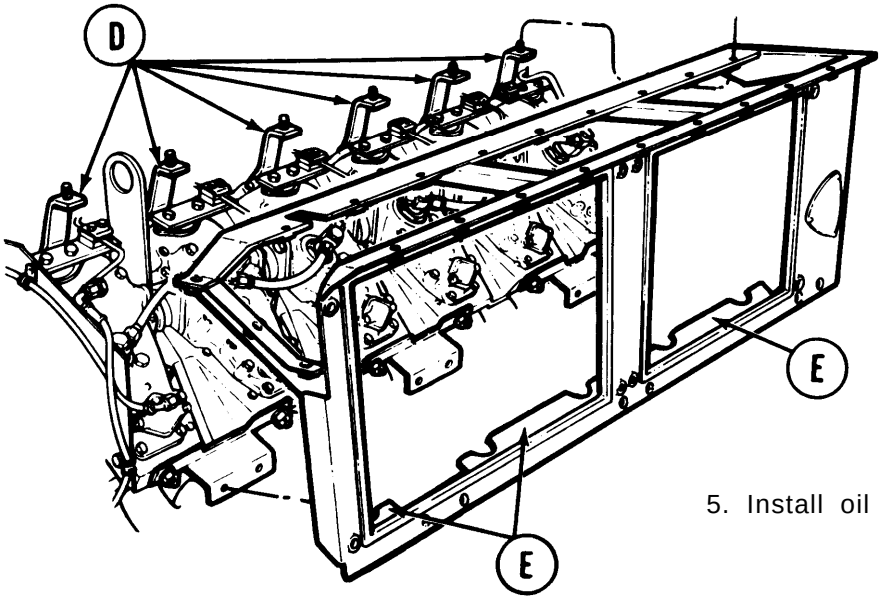

5. Install oil cooler and support frame.

Go on to Sheet 7

TA248112

POWERPLANT RIGHT BANK OIL COOLER FRAME ANDBRACKETS REPLACEMENT (Sheet 7 of 9)

6. Using alining punch, line up holes for screws(F).

7. Using 1/2 inch socket with extension or 1/2 inch wrench, install five screws (F).

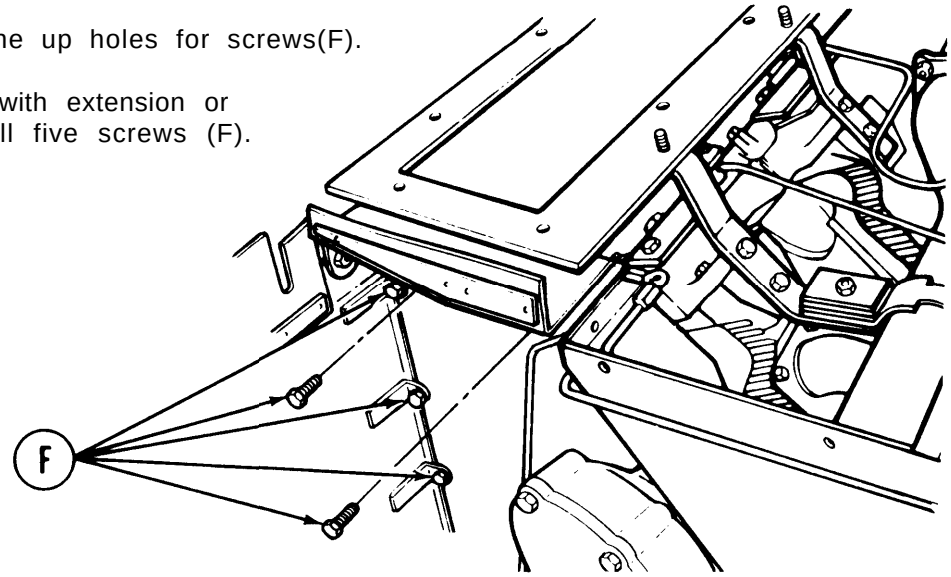

8. Using 9/16 inch socket, install capscrew, flat washer, and self-locking nut (G). Use 9/16 inch wrench to keep nut from turning.

9. Using 1/2 inch socket, install three screws (H) and cushioned clamp holding timing access cover to frame.

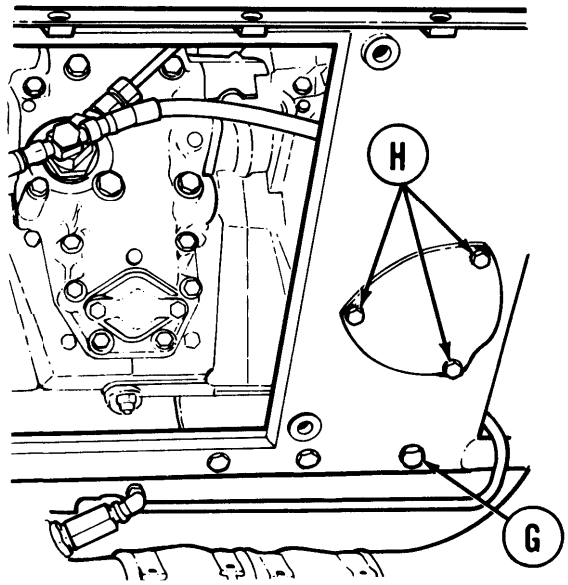

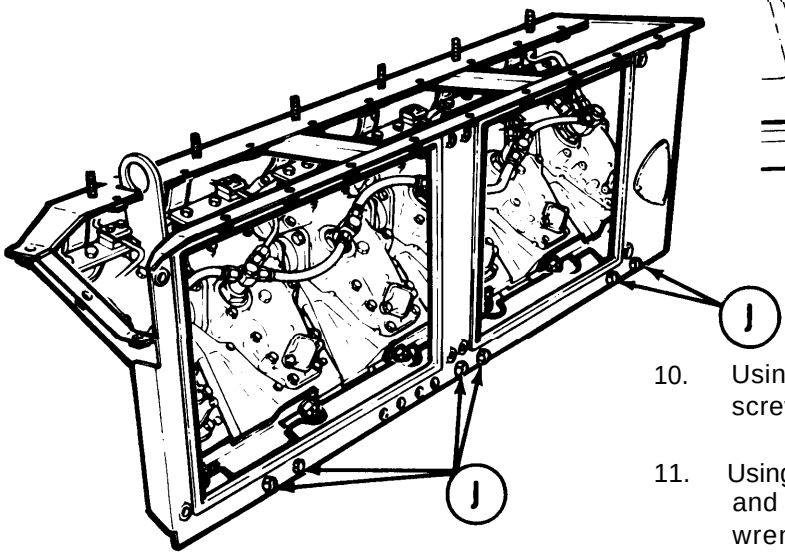

10. Using alining punch, line up holes for capscrews and new self-locking nuts (J).

11. Using 9/16 inch socket, install six capscrews and self-locking nuts (J). Use 9/16 inch wrench to keep nuts from turning.

TA248113

Go to Sheet 8

POWERPLANT RIGHT BANK OIL COOLER FRAME AND BRACKETS REPLACEMENT (Sheet 8 of 9)

12. Using 9/16 inch wrench, install screw with clamp (K) to hold cable assembly against frame. Use 9/16 inch wrench to keep nuts from turning.

13. Position bracket (L) to frame with hoses (M) behind bracket (L).

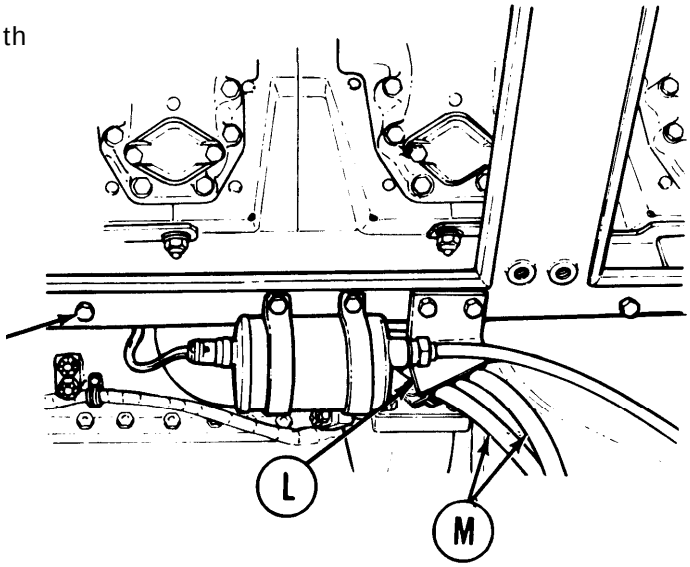

14. Using 1/2 inch socket, install two capscrews (N) and self-locking nuts. Use 1/2 inch wrench to keep nuts from turning.

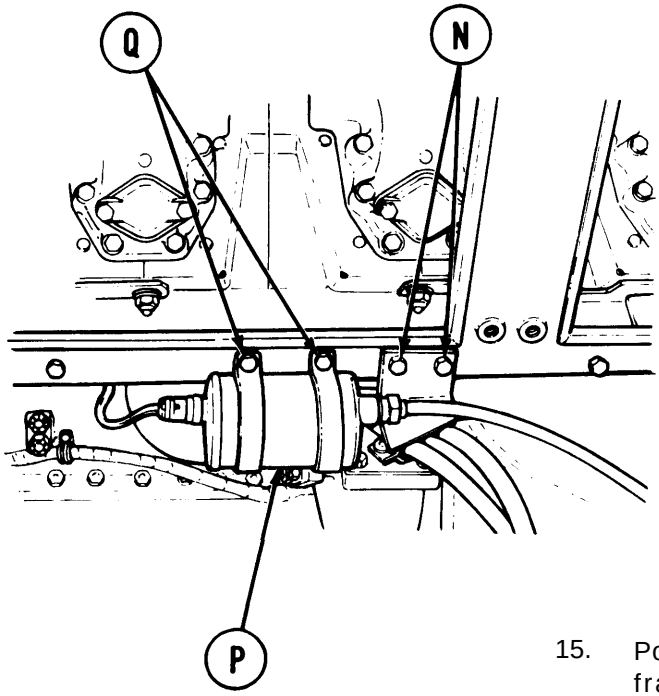

15. Position ignition unit (P) with clamps and leads to frame.

16. Using 1/2 inch wrench, install two capscrews (Q).

Go on to Sheet 9

TA248114

POWERPLANT RIGHT BANK OIL COOLER FRAME AND BRACKETS REPLACEMENT (Sheet 9 of 9)

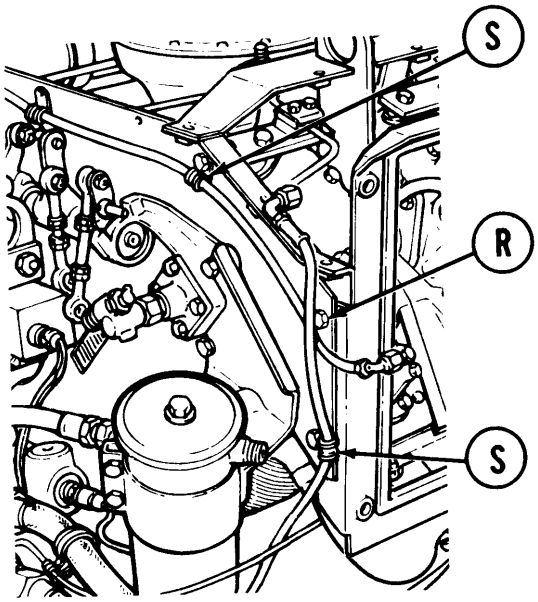

17. Using alining punch, line up hole for washer bolt (R).

18. Using 1/2 inch socket and extension, install washerbolt (R).

19. Using 1/2 inch socket and extension, install two assembled washerbolts and clamps (s).

20. Install generator air exhaust pipe and hose (page 10-16).

21. Install engine access covers (right bank) (page 6-110).

22. Install centrifugal fan housings (page 9-65).

23. Install engine cooling fans (page 9-57).

24. Install engine cooling fan shroud (page 9-51).

25. Install transmission right oil cooler (page 6-43).

26. Install engine right oil cooler (page 6-22).

27. Install engine shroud (page 9-31).

28. Install powerplant (page 5-14).

End of Task

TA248115

POWERPLANT LEFT BANK OIL COOLER FRAME AND BRACKETS REPLACEMENT (Sheet 1 of 9)

PROCEDURE INDEX

PROCEDURE	PAGE
Removal	6-126
Inspection	6-130
Installation	6-131

TOOLS: Ratchet with 1/2 in. drive
5 in. extension with 1/2 in. drive
1/2 in. socket with 1/2 in. drive
5/8 in. socket with 1/2 in. drive
9/16 in. socket with 1/2 in. drive
Alining punch
1/2 in. combination box and open end wrench
3/8 in. combination box and open end wrench
9/16 in. combination box and open end wrench
11/16 in. socket with 1/2 in. drive
4 in. flat-tip screwdriver

PERSONNEL: Two

PRELIMINARY PROCEDURES:
Remove powerplant (page 5-2)
Remove engine shroud (page 9-30)
Remove centrifugal fan housing (page 9-64)
Remove engine cooling fans (page 9-55)
Remove engine cooling fan shroud (page 9-47)
Remove engine access covers (left bank) (page 6-112)
Remove engine left oil cooler (page 6-19)
Remove transmission left oil cooler (page 6-38)

SUPPLIES: Shims
Self-locking nuts

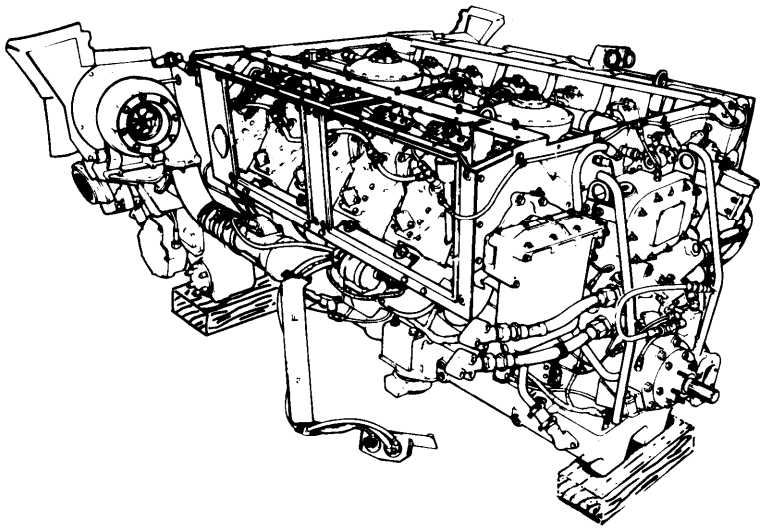

Go onto Sheet 2

TA248116

POWERPLANT LEFT BANK OIL COOLER FRAME AND BRACKETS REPLACEMENT (Sheet 2 of 9)

NOTE

Because of space limitations, it may be necessary to interchange like size sockets and wrenches to get at a particular screw.

REMOVAL:

NOTE

It may be necessary to use screwdriver and 3/8 inch wrench to remove clamp (A) and move tube (B) before fuel-water separator filter (C) can be lowered.

1. Using 1/2 inch socket, remove four capscrews, lockwashers, and flat washers (D).

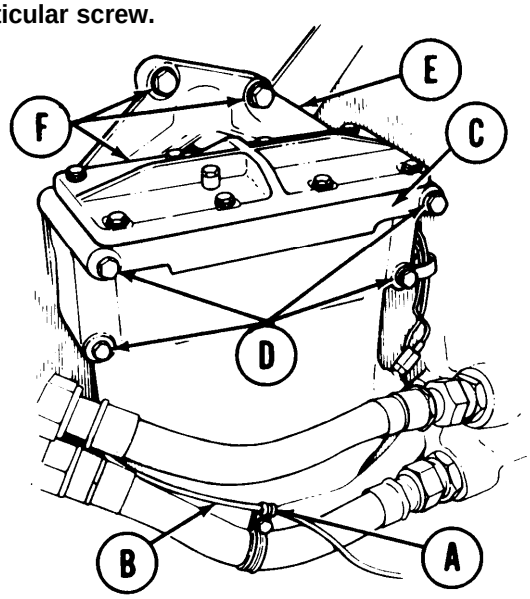

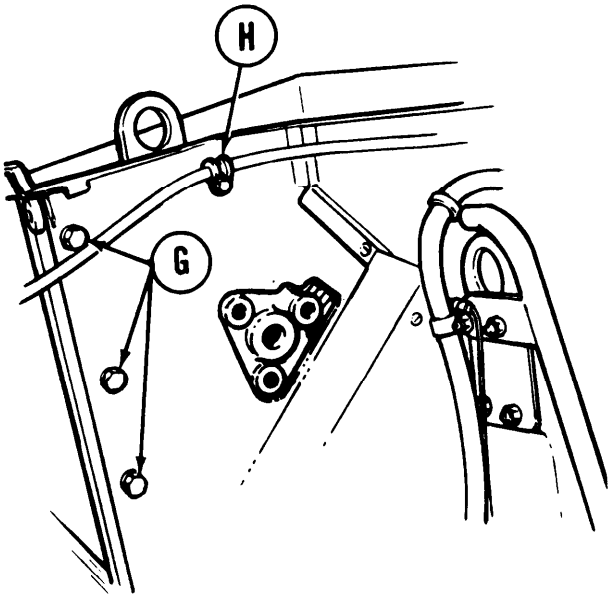

2. Lower fuel-water separator filter (C) away from mounting bracket (E).

3. Using 5/8 inch socket, remove three screws, lockwashers and flatwashers (F) securing mounting bracket (E) to engine. Remove mounting bracket (E).

4. Using 1/2 inch socket, remove three assembled washer bolts (G).

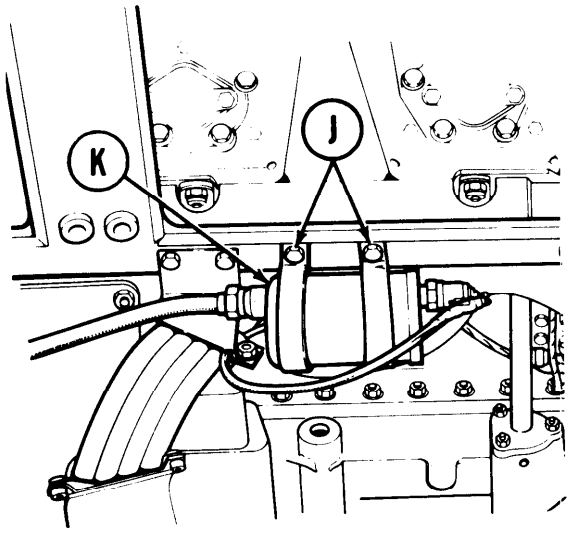

5. Using 1/2 inch socket, remove screw and clamp (H).

6. Using 1/2 inch wrench, remove two screws (J).

7. Remove ignition unit (K) with clamps and leads from frame.

TA248117

Go on to Sheet 3

POWERPLANT LEFT BANK OIL COOLER FRAME AND BRACKETS REPLACEMENT (Sheet 3 of 9)

8. Using 1/2 inch socket and 1/2 inch wrench, remove two capscrews and self-locking nuts (L).

9. Remove bracket (M) with harness attached from frame.

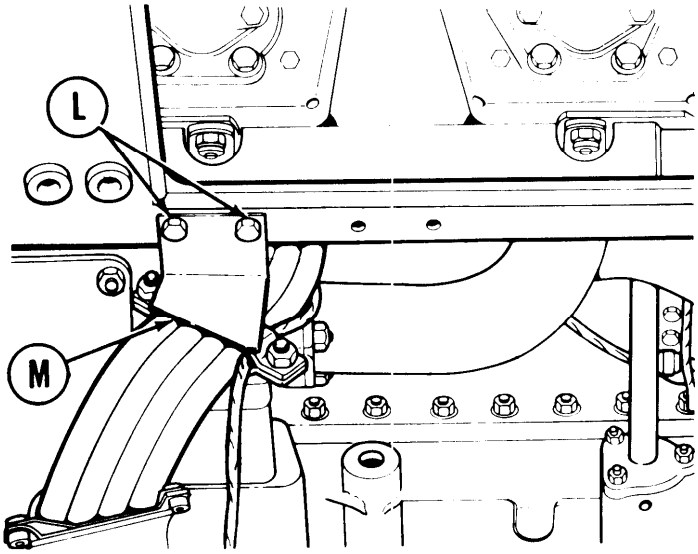

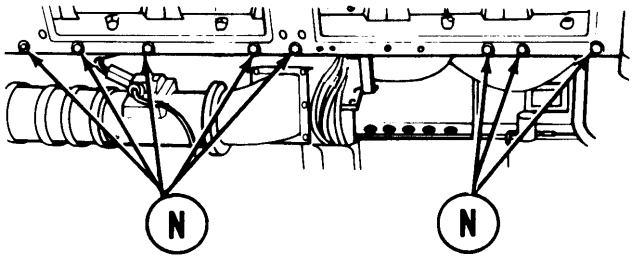

10. Using 9/16 inch socket and 9/16 inch wrench, remove eight capscrews and self-locking nuts (N). Use 9/16 inch wrench to keep nuts from turning.

11. Using 1/2 inch socket with extension, remove four screws (P).

12. Using 1/2 inch socket and 1/2 inch wrench remove screw and self-locking nut (Q).

NOTE

It may be necessary to pull frame (R) out before oil cooler support frame (S) can be removed.

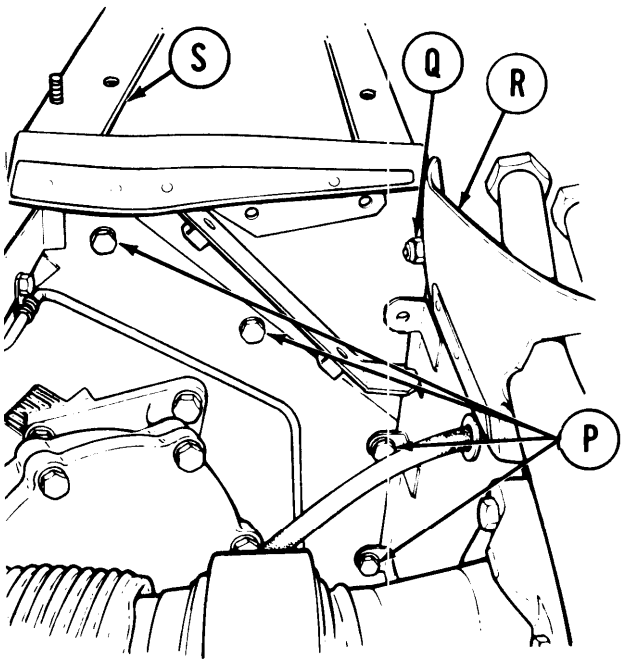

Go on to Sheet 4

TA248118

POWERPLANT LEFT BANK OIL COOLER FRAME AND BRACKETS REPLACEMENT (Sheet 4 of 9)

NOTE

It may be necessary to depress three flanges (T) on frame bottom during removal to clear protruding obstacles on the engine.

13. Remove oil cooler support frame (S).

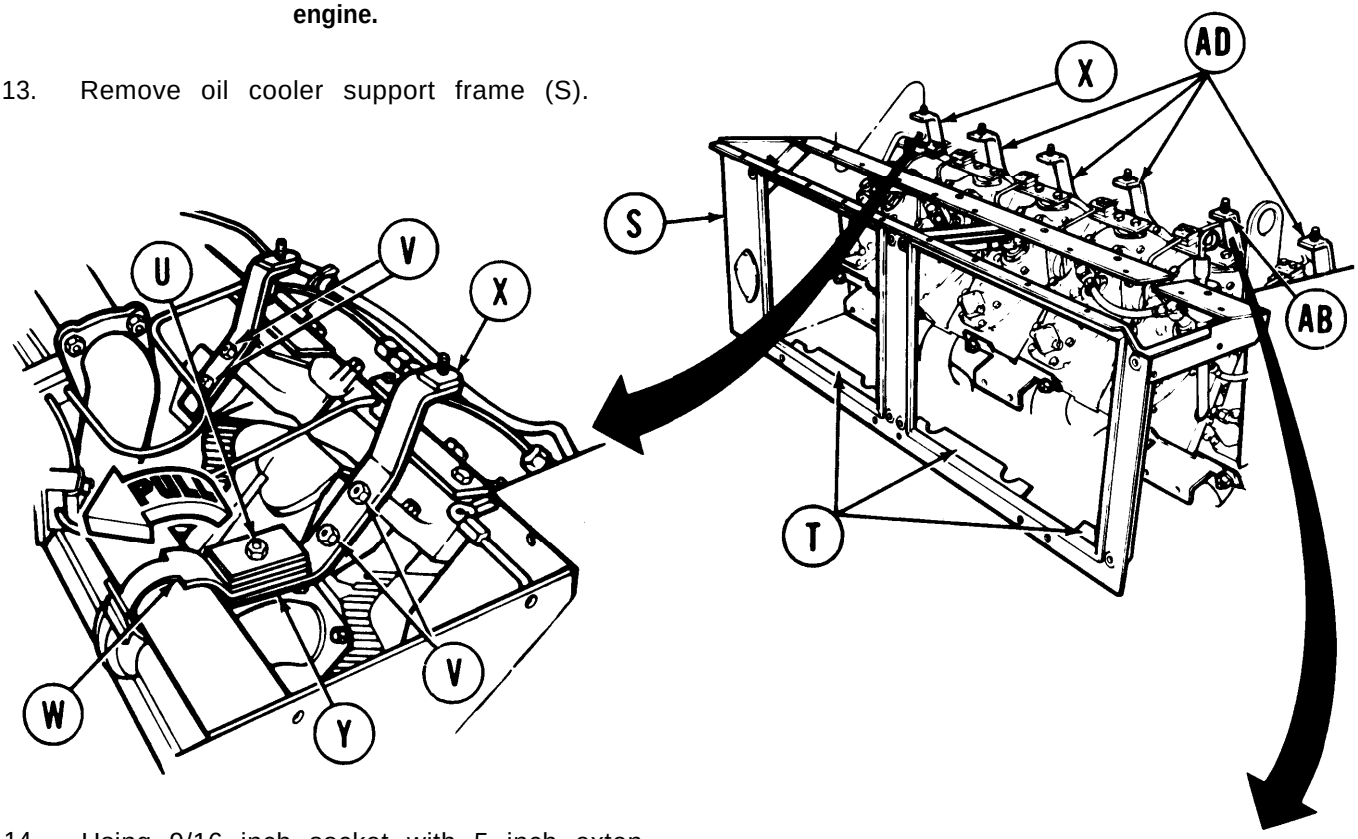

14. Using 9/16 inch socket with 5 inch extension and 9/16 inch wrench, remove locknut (U).

15. Using 1/2 inch socket with extension, remove nuts (V).

16. Move two shims and clamp (W) up and remove bracket (X) and screw (Y).

17. Remove screw (Y) from bracket (X).

18. Using 1/2 inch socket and 1/2 inch wrench, remove screw and nut (Z).

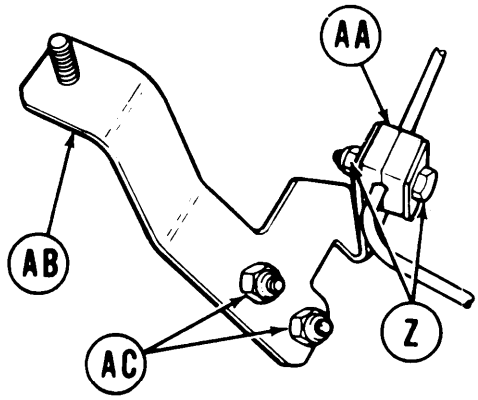

19. Remove clamp (AA) from bracket (AB) and fuel line.

20. Using 1/2 inch socket with extension, remove nuts (AC).

21. Remove bracket (AB).

22. Using 1/2 inch socket with extension, remove four brackets (AD).

Go on to Sheet 5

TA248119

POWERPLANT LEFT BANK OIL COOLER FRAME AND BRACKETS REPLACEMENT (Sheet 5 of 9)

23. Using 11/16 inch socket, remove two locknuts and spacers from three frame support brackets (AD). Remove three frame support brackets.

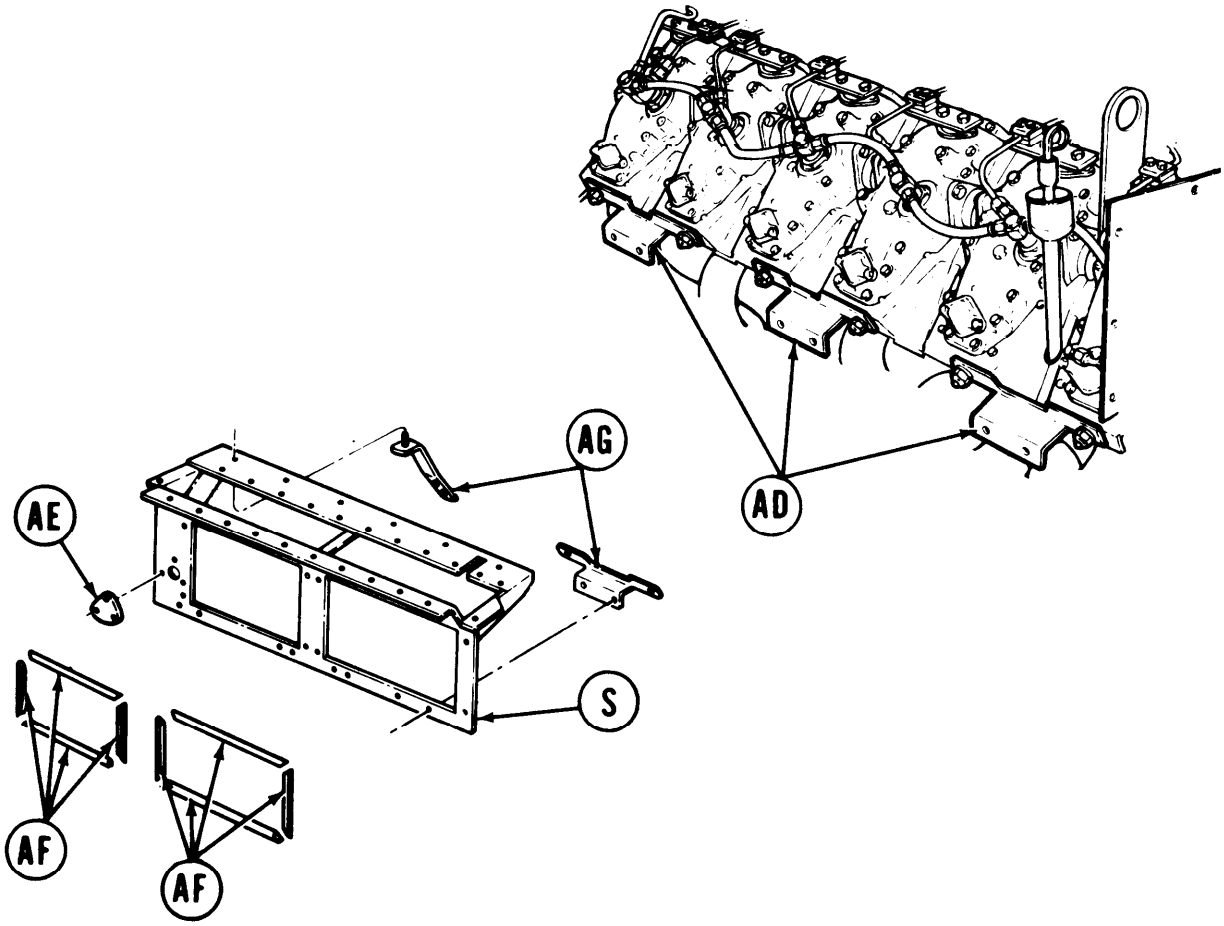

INSPECTION:

1. Check oil cooler support frame (S) for dents and breaks. Repair if possible or replace if necessary.

2. Check timing access cover (AE) for breaks. Using 1/2 inch socket, replace if necessary.

3. Check rubber strips (AF) for breaks and tears. Replace if necessary.

4. Check brackets (AG) for cracks and breaks. Replace if necessary.

Go on to Sheet 6

TA248120

POWERPLANT LEFT BANK OIL COOLER FRAME AND BRACKETS REPLACEMENT (Sheet 6 of 9)

INSTALLATION:

NOTE

Because of space limitations, it may be necessary to interchange like size sockets with wrenches to get at a particular screw.

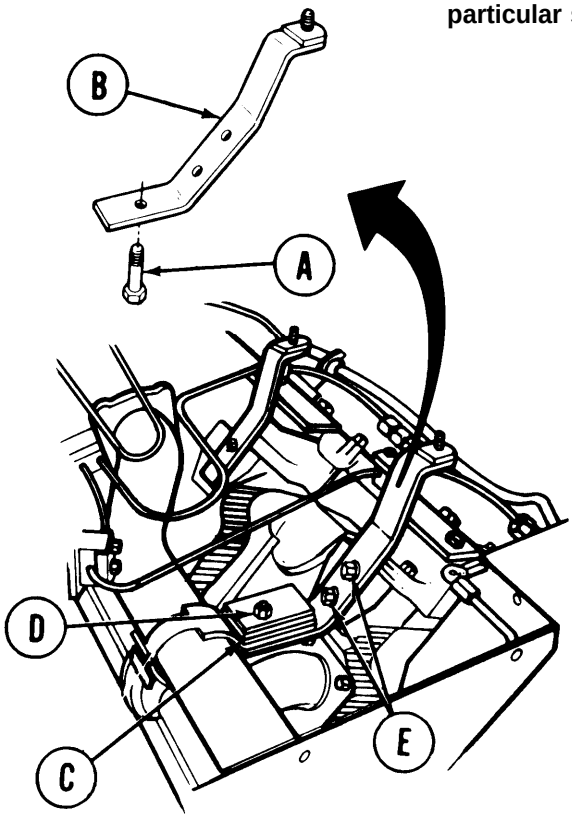

1. Install screw (A) through bracket (B).
2. Position bracket (B) and screw (A) on engine.
3. Install clamp and two shims (C) on screw (A).
4. Using 9/16 inch socket and 9/16 inch wrench, install nut (D).
5. Using 1/2 inch socket with extension, install nuts (E).
6. Position bracket (F) on engine.

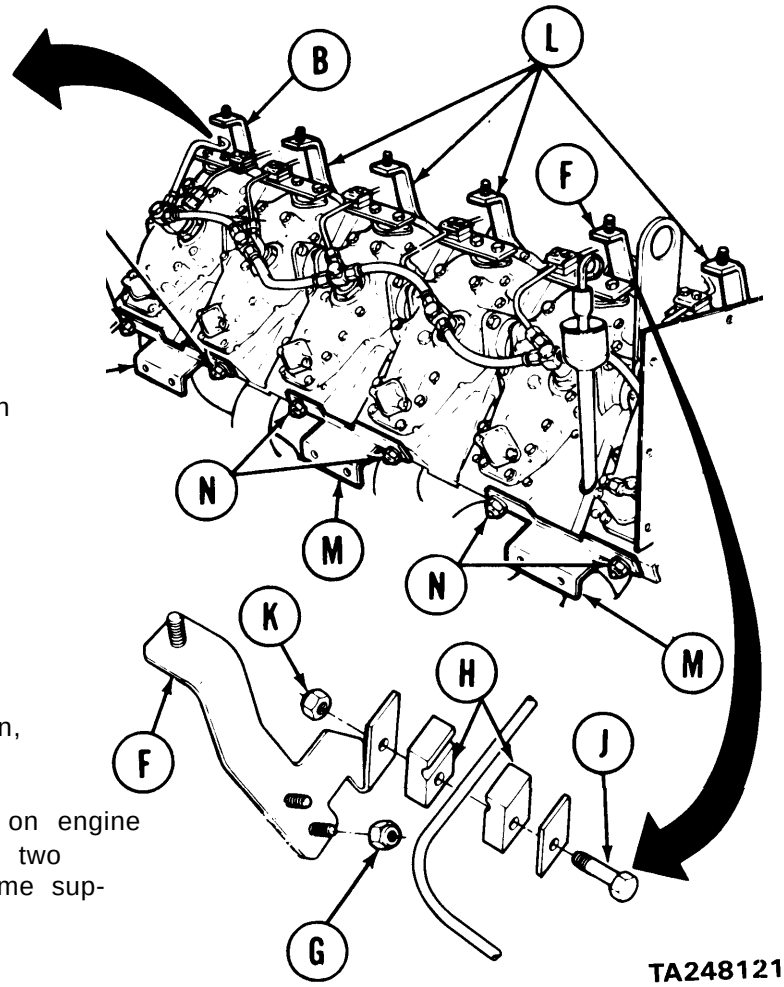

7. Using 1/2 inch socket with extension or 1/2 inch wrench, install nuts (G).
8. Position clamp (H) on fuel line and install screw (J) through clamp (H) and bracket (F).
9. Using 1/2 inch socket and 1/2 inch wrench, install nut (K) on screw (J).
10. Using 1/2 inch socket with extension, install four brackets (L).
11. Position frame support brackets (M) on engine and, using 11/16 inch socket, install two new locknuts (N) to secure each frame support bracket (M).

Go on to Sheet 7

POWERPLANT LEFT BANK OIL COOLER FRAME AND BRACKETS REPLACEMENT (Sheet 7 of 9)

NOTE

It may be necessary to pull frame (P) out and depress three flanges (Q) on frame bottom during installation to clear protruding obstacles on the engine. It may be necessary to loosen and move brackets (B, F and L) slightly before oil cooler support frame can be installed.

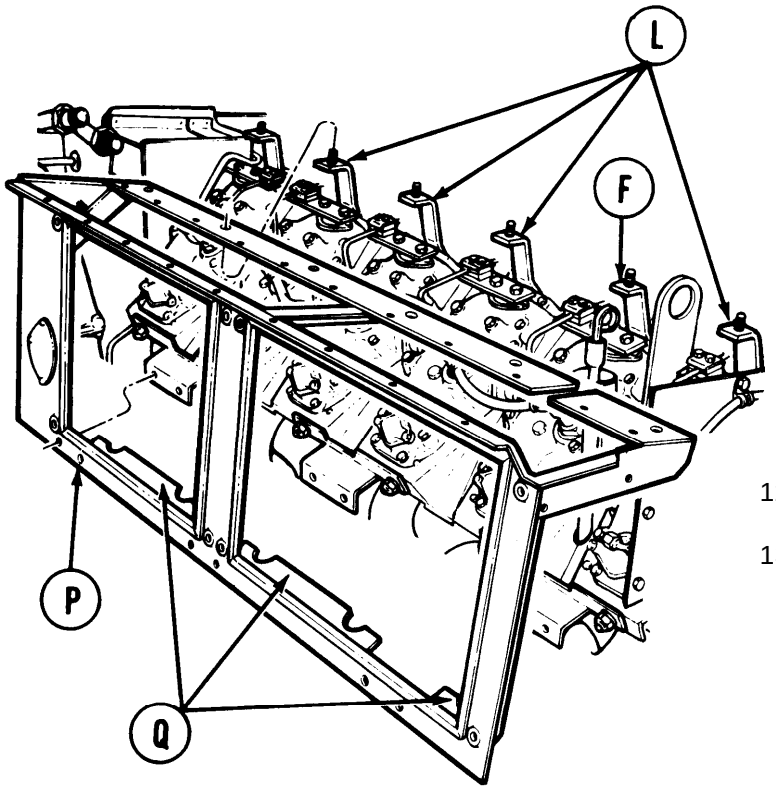

12. Install oil cooler support frame.

13. Using alining punch, aline screw holes and, using 1/2 inch socket with extension, install four screws (R).

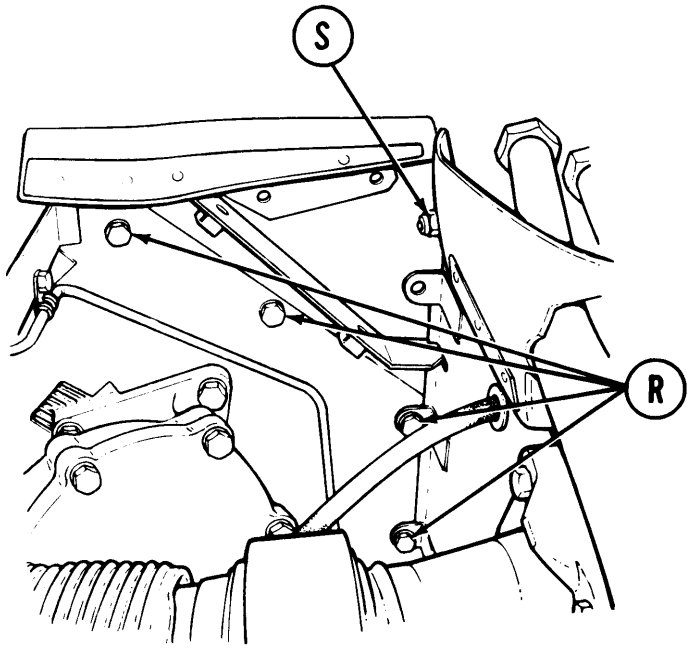

14. Using 1/2 inch socket and 1/2 inch wrench, install screw and self-locking nut (S).

Go on to Sheet 8

TA248122

POWERPLANT LEFT BANK OIL COOLER FRAME AND BRACKETS REPLACEMENT (Sheet 8 of 9)

15. Using alining punch, aline screw holes and, using 9/16 inch socket and 9/16 inch wrench, install eight capscrews and self-locking nuts (T).

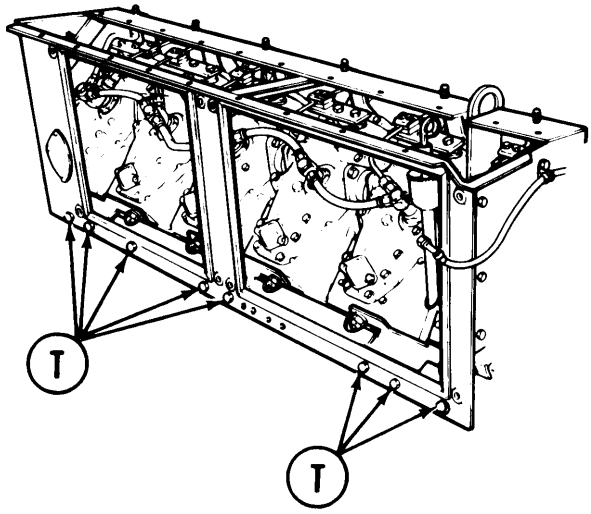

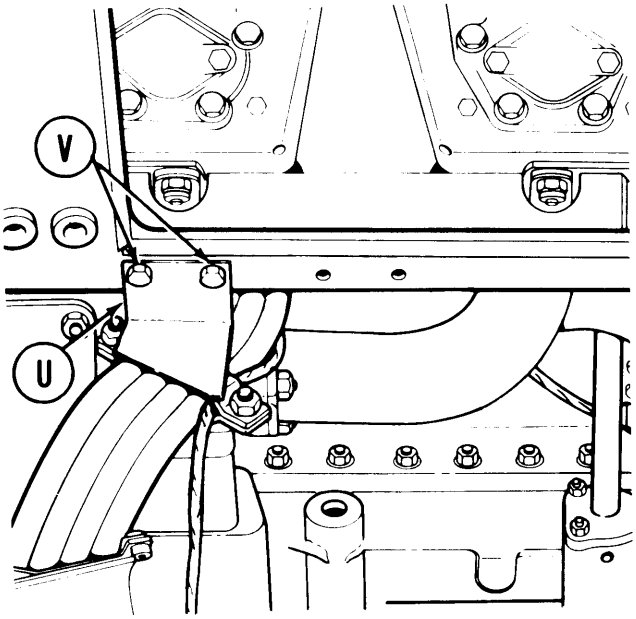

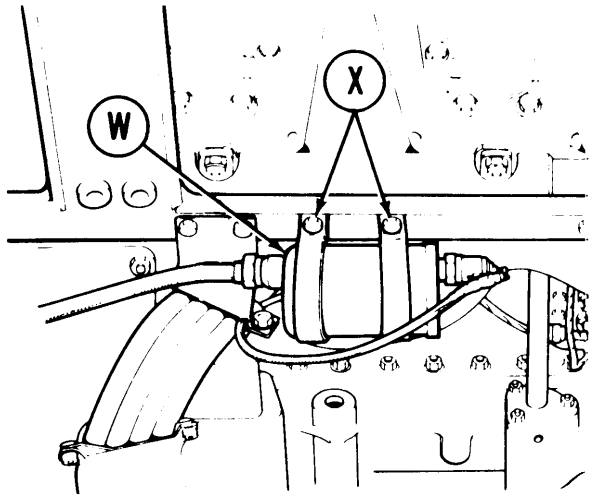

16. Position bracket (U) to frame.

17. Using 1/2 inch socket and 1/2 inch wrench, install two capscrews and self-locking nuts (V) to hold bracket (U) to frame.

18. Position ignition unit (W) with clamps and leads to frame.

19. Using 1/2 inch wrench, install two capscrews (X).

20. Using 1/2 inch socket, install screw and clamp (Y).

21. Using 1/2 inch socket, install three assembled washer bolts (Z).

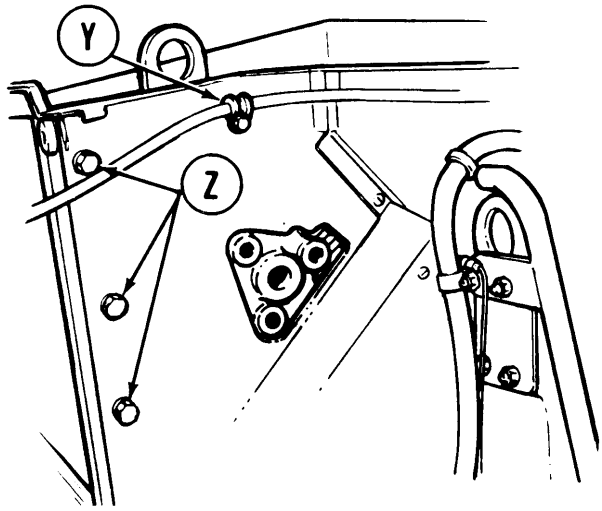

TA248123

Go on to Sheet 9

POWERPLANT LEFT BANK OIL COOLER FRAME AND BRACKETS REPLACEMENT (Sheet 9 of 9)

22. Place mounting bracket (AA) in position and, using 5/8 inch socket, tighten three screws (AB).

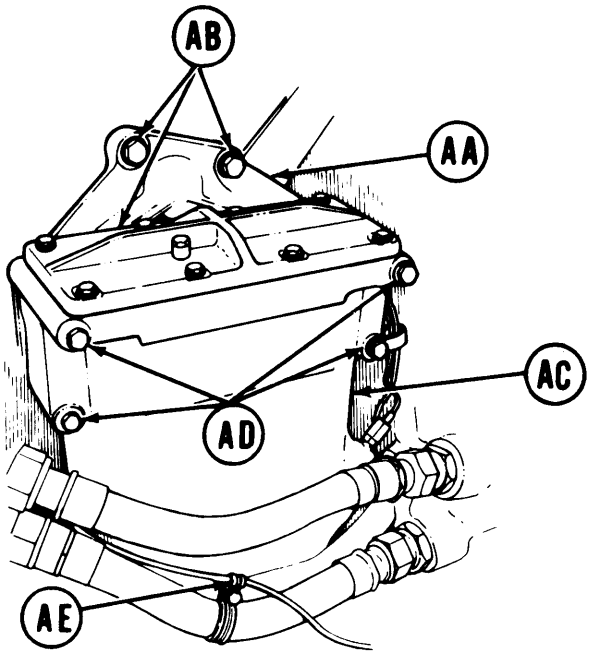

23. Position fuel-water separator (AC) to mounting bracket (AA).

CAUTION

Mounting bracket (AA) is made of aluminum. Overtightening of capscrews (AD) could strip threads.

24. Using 1/2 inch socket, install four capscrews, lockwashers, and flat washers (AD).

25. Using screwdriver and 3/8 inch wrench, install clamp (AE) if removed.

26. Install transmission left oil cooler (page 6-43).

27. Install engine left oil cooler (page 6-22).

28. Install engine access covers (left bank) (page 6-115).

29. Install engine cooling fan shroud (page 9-51).

30. Install engine cooling fans (page 9-57).

31. Install centrifugal fan housing (page 9-65).

32. Install engine shroud (page 9-31).

33. Install powerplant (page 5-14).

End of Task

TA248124

CYLINDER HEAD AND OIL PAN DRAIN TUBES (LEFT AND RIGHT) REPLACEMENT (Sheet 1 of 4)

PROCEDURE INDEX

PROCEDURE	PAGE
Removal	6-135
Inspection	6-136
Installation	6-137

TOOLS: 7/8 in. socket with 1/2 in. drive
Flat-tip screwdriver
1/2 in. socket with 1/2 in. drive
Ratchet with 1/2 in. drive
Diagonal cutting pliers
Slip joint pliers
3/8 in. combination box and open end wrench

SUPPLIES: Gasket
Gasket (12 required)
Lockwire (Item 61, Appendix D)
Washer (12 required)

SPECIAL TOOLS: Ground hop kit (Item 31, Chapter 3, Section 1).

REFERENCE: LO 5-5420-202-12

PRELIMINARY PROCEDURES: Remove powerplant (page 5-2)
Drain engine oil (page 6-12)
Remove left oil cooler frame and brackets (page 6-136) (as required)
Remove right oil cooler frame and brackets (page 6-117) (as required)

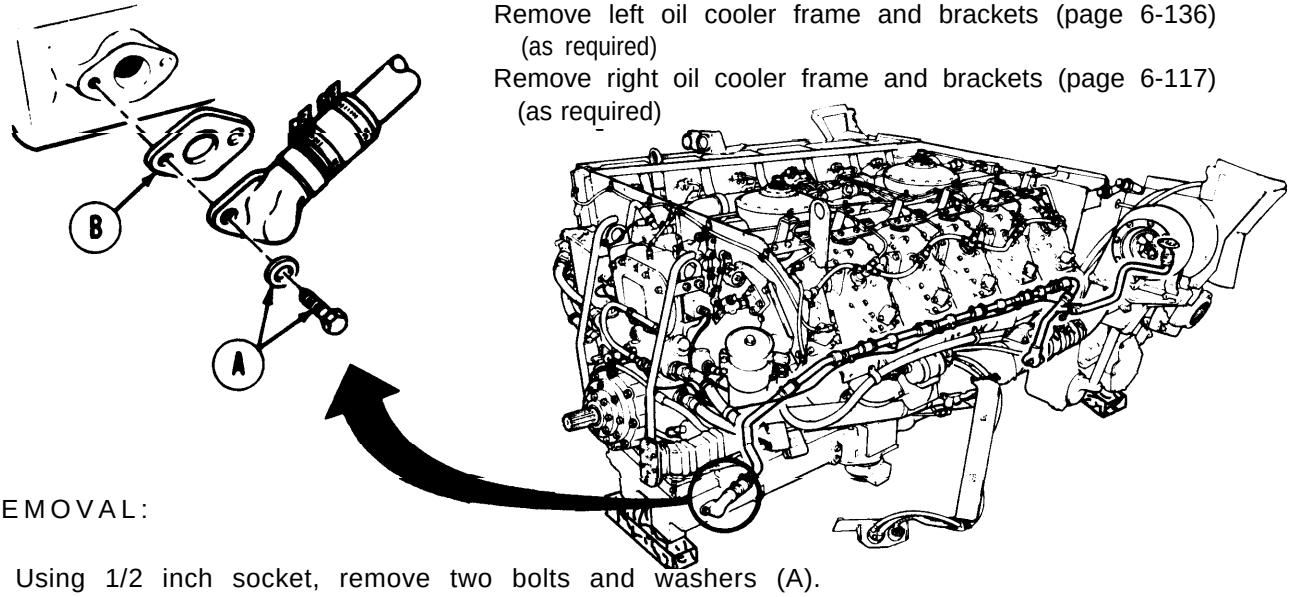

REMOVAL:

1. Using 1/2 inch socket, remove two bolts and washers (A).
2. Remove gasket (B) and throw away.

Go on to Sheet 2

TA248125

CYLINDER HEAD AND OIL PAN DRAIN TUBES (LEFT AND RIGHT) REPLACEMENT (Sheet 2 of 4)

3. Holding nut with wrench and using screwdriver, disconnect four fuel line clamps (C) from oil drain line.

4. Using screwdriver, loosen 16 clamps (D) on eight hoses (E) on each end of drain tube assembly.

5. Using cutting pliers, cut lockwire (F) on six bolts (G).

6. Using 7/8 inch socket, remove six bolts (G), 12 washers (H) and 12 gaskets (J).

7. Throw washers (H) and gaskets (J) away.

8. Remove drain tube assembly (K) from engine.

INSPECTION:

1. Inspect capscrews for stripped threads.

2. Inspect hose clamps for general serviceability.

3. Replace defective parts as required.

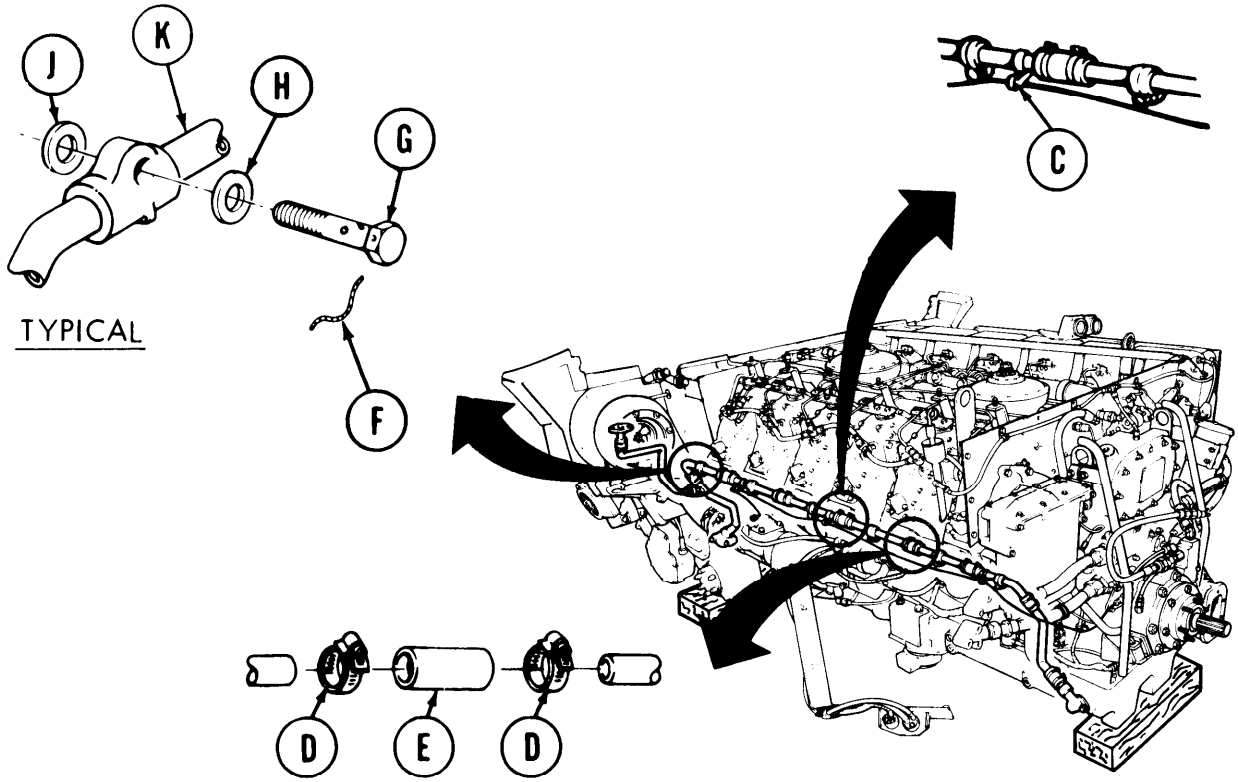

Go on to Sheet 3

TA248126

CYLINDER HEAD AND OIL PAN DRAIN TUBES (LEFT AND RIGHT) REPLACEMENT (Sheet 3 of 4)

INSTALLATION:

1. Cut eight hoses (A) to prescribed length (3 inches).
2. Install 16 clamps (B) on drain tube assembly (C).
3. Install eight hoses (A) on drain tube assembly (C).
4. Position assembled drain tube assembly (C) to engine.
5. Install 12 new washers (D) on six bolts (E).
6. Insert bolts(E) through drain tube assembly (C)and install new gasket (F) onto bolt (E).
7. Position drain tube assembly (C) with bolt (E), washer (D) and gasket (F) to engine.
8. Using 7/8 inch socket, secure bolt (E) to engine.
9. Using pliers, install lockwire (G).

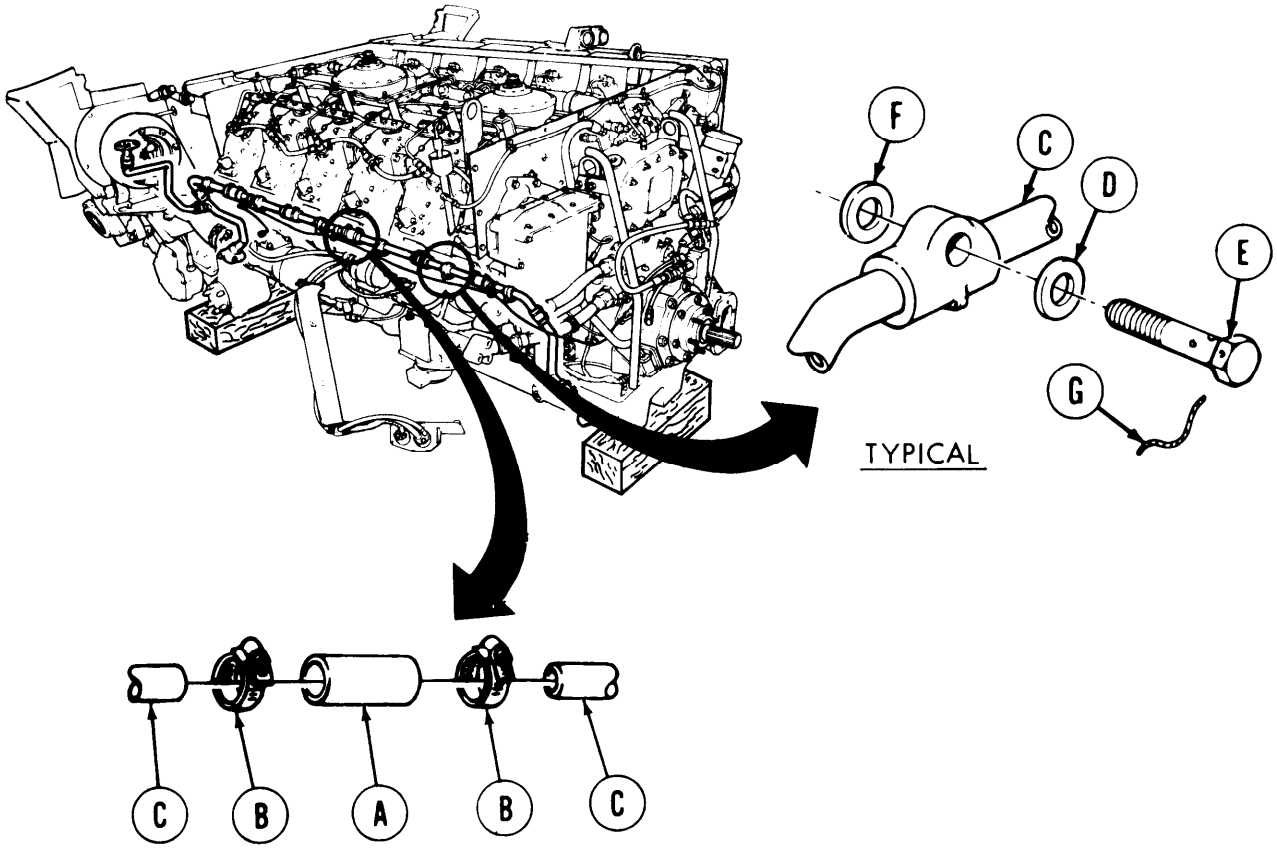

Go on to Sheet 4

TA248127

CYLINDER HEAD AND OIL PAN DRAIN TUBES (LEFT AND RIGHT) REPLACEMENT (Sheet 4 of 4)

8. Position two bolts and washers (H) through lower drain tube end and place new gasket (J) over bolts.
9. Using 1/2 inch socket, tighten two bolts and washers (H) to engine.
10. Using screwdriver, tighten 16 clamps (B) on hoses (A) and (C) on each end of lower drain lines assembly.
11. Holding nut with 3/8 inch wrench and using screwdriver, connect four fuel line clamps (J) to oil drain line.
12. Install left oil cooler frame and brackets (page 6-131) (as required).
13. Install right oil cooler frame and brackets (page 6-121) (as required).
14. Replenish engine oil (LO 5-5420-202-12).
15. Connect powerplant test (ground hop) equipment (page 5-25).
16. Start engine and check for leaks.
17. Disconnect powerplant test (ground hop) equipment (page 5-40).
18. Install powerplant (page 5-14).

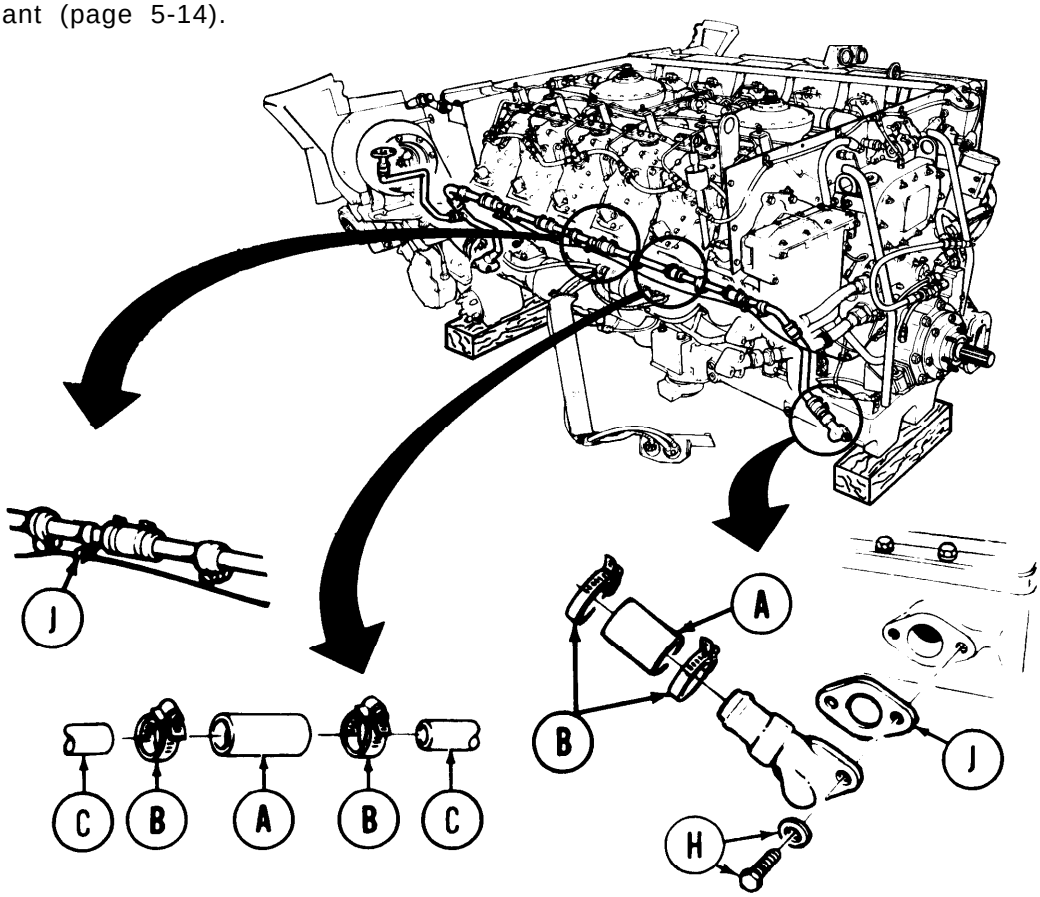

TA248128

End of Task

CHAPTER 7

FUEL SYSTEM MAINTENANCE

INDEX

Procedure	Page
Fuel Pump Replacement - Right Fuel Tank	7-5
Fuel Pump Replacement - Left Fuel Tank	7-11
Fuel Pump to Fuel - Water Separator Hose Assembly Replacement	7-20
Fuel Backflow valve Replacement	7-25
Tube Assembly (Fuel Injection Pump Inlet to Bulkhead Elbow) Replacement	7-29
Water Separator Fuel Filter Outlet Hose Assembly Replacement	7-34
Engine Fuel Pump Replacement	7-37
Primary Fuel Filter Outlet to Fuel Backflow Valve Hose Assembly Replacement	7-40
Fuel Line Insulator Replacement	7-42
Fuel Return Lines Replacement	7-52
Inspect Fuel Injector Nozzles and Holders	7-62
Purge Fuel System	7-63
Air Cleaner Intake and Hose Replacement	7-65
Air Cleaner Plug Replacement	7-70
Air Cleaner Intake Elbow Replacement	7-71
Air Cleaner Turbocharger Elbow Replacement	7-74
Air Cleaner (Armored) Blower Fan Power Lead Replacement.	7-77
Air Cleaner (Aluminum) Centrifugal Fan Power Lead Replacement	7-80
Air Cleaner Outlet Hose Replacement	7-84

FUEL SYSTEM MAINTENANCE INDEX - Continued

Procedure

Air Cleaner Restriction Indicator (Left and Right) Replacement 7-87
Air Cleaner Replacement 7-88
Air Cleaner Filter Element Cleaning or Replacement 7-96
Air Cleaner Outlet Elbow Replacement 7-101
Air Cleaner (Armored) Centrifugal Fan Cover and Gasket Replacement 7-103
Air Cleaner (Aluminum) Centrifugal Fan Cover and Gasket Replacement 7-106
Air Cleaner (Armored) Centrifugal Fan Hose Replacement. 7-109
Air Cleaner (Aluminum) Centrifugal Fan Hose Replacement 7-110
Air Cleaner (Armored) Centrifugal Fan Replacement 7-111
Air Cleaner (Aluminum) Centrifugal Fan Replacement 7-118
Air Cleaner (Armored) Circuit Breaker Replacement 7-124
Air Cleaner (Aluminum) Circuit Breaker Replacement 7-125
Air Cleaner Centrifugal Fan Ground Lead Replacement 7-126
Air Cleaner Door Replacement 7-128
Air Cleaner Manifold Cover and Gasket Replacement 7-130.1
Air Cleaner Manifold and Related Parts Replacement 7-130.3
Dust Detector Pressure Switch and Bracket Replacement 7-130.7
Dust Detector Filter Strip and Cover Replacement 7-130.11
Service Dust Detector Filter Strip 7-130.14
Air Pressure Hose Assemblies Replacement 7-130.16
Condensate Relief Valve Replacement (Left or Right) 7-131
Right Fuel Tank Filler Repair. 7-133
Left Fuel Tank Emergency Filler Repair 7-139
Fuel Tanks (Left and Right) Level Gage Transmitter Replacement 7-141

FUEL SYSTEM MAINTENANCE INDEX - Continued

Procedure

Fuel Tank Butterfly Valve Replacement 7-145

Left Fuel Tank Jettison Pipe Plug Replacement 7-152

Breather Line Replacement. 7-153

Right Fuel Tank Return Tube Assembly Replacement 7-158

Fuel Return Hose (Right Tank) Replacement 7-161

Engine Fuel Return Selector Cock Replacement 7-163

FUEL SYSTEM MAINTENANCE INDEX - Continued

Procedure

Engine Fuel Return Hose Assembly (Left Side) Replacement 7-167
Engine Fuel Return Hose Replacement 7-169
Fuel Shutoff Handle Replacement 7-171
Hose Assembly (To Primary Fuel Filter) Replacement 7-173
Hose Assembly (To Purge Line) Replacement. 7-175
Fuel Tank Condensate Removal 7-178
Draining Fuel Tanks 7-184
Fuel Tanks (Left and Right) Drain Plug Replacement 7-186
Primary Fuel Filter Element Replacement. 7-187
Primary Fuel Filter Replacement: 7-192
Fuel-Water Separator Filter Element Replacement 7-196
Fuel-Water Separator Fluid Pressure Filter Assembly Replacement 7-202
Fuel-Water Separator Control Assembly Replacement. 7-209
Fuel-Water Separator Drain Solenoid Valve Replacement 7-214
Fuel-Water Separator Drain Lines Replacement 7-217
Fuel-Water Separator Operational Tests 7-223
Engine Fuel Return Tube Replacement 7-234
Main Fuel Feed Hose Replacement 7-236
Inter-Tank Swing Check Valve Replacement 7-238
Fuel Inlet Fluid Pressure Filter Repair 7-243
Manifold Heater Fuel Filter and Input Fuel Line Replacement 7-245
Manifold Heater Input solenoid Valve and Fuel Line Replacement 7-253
Check Valve (Manifold Heater-Return Fuel) Replacement 7-263

FUEL SYSTEM MAINTENANCE INDEX - Continued

Procedure

Manifold Heater Fuel Return Tube Assembly Replacement (Left and Right Bank) 7-266

Manifold Heater Nozzle Replacement 7-273

Manifold Heater (Left and Right) Replacement 7-276

Manifold Heater Ignition Coil and Cable Replacement 7-279

Manifold Heater Fuel Return Solenoid Valve Replacement 7-282

Manifold Heater Spark Plug Replacement 7-287

Manifold Heater Operational Check 7-288

Manifold Heater Fuel Return Hose Assembly Replacement. 7-290

Engine Fuel Return Tube Assembly Replacement 7-294

Engine Idle Adjustment 7-297

Accelerator Pedal Return Spring Adjustment. 7-298

Accelerator Linkage Adjustment 7-300

Accelerator Pedal Assembly Replacement 7-306

Accelerator Control Rod Replacement 7-308

Accelerator Throttle Linkage Replacement 7-313

Accelerator Linkage Engine Control Replacement 7-322

Accelerator Linkage Bulkhead Flange Replacement 7-324

Throttle Control Handle Assembly Replacement 7-327

Fuel Tank Repair 7-331

Fuel Tank (Right) Replacement. 7-333

Fuel Tank (Left) Replacement. 7-348

Fuel Shutoff Cable Assembly Replacement. 7-364

Fuel Tanks (Left and Right) Lower Rear Mount Replacement. 7-377

Fuel Tank (Left) Lower Front Mount Replacement. 7-381

FUEL SYSTEM MAINTENANCE INDEX - Continued

Procedure

Fuel Tank (Right)) Lower Front Mount Replacement 7-385

Fuel Tank (Left and Right) Upper Front Mount Replacement 7-388

Fuel Tank (Left and Right) Upper Rear Mount Replacement 7-394

Fuel Tank (Left) Lower Front Mounting Bracket Replacement 7-397

FUEL PUMP REPLACEMENT - RIGHT FUEL TANK (Sheet 1 of 6)

PROCEDURE INDEX

PROCEDURE	PAGE
Removal	7-5
Installation	7-8

TOOLS: 3/8 in. combination box and open end wrench
7/16 in. socket with 1/2 in. drive
1/2 in. socket with 1/2 in. drive
9/16 in. socket with 1/2 in. drive
Ratchet with 1/2 in. drive
Torque wrench with 1/2 in. drive (0-175 lb-ft) (0-237 NŽm)
Diagonal cutting pliers
Flat-tip screwdriver
Cross-tip screwdriver

SUPPLIES: Sealing compound (Item 28, Appendix D)
Silicone compound (Item 32, Appendix D)
Rags (Item 65, Appendix D)
Wire (Item 61, Appendix D)
Gasket
Gasket
Lockwashers

REFERENCE: TM 5-5420-202-10

PRELIMINARY PROCEDURES: Isolate right fuel tank (TM 5-5420-202-10)
Drain right fuel tank (page 7-206)
Remove rear access cover (page 184)

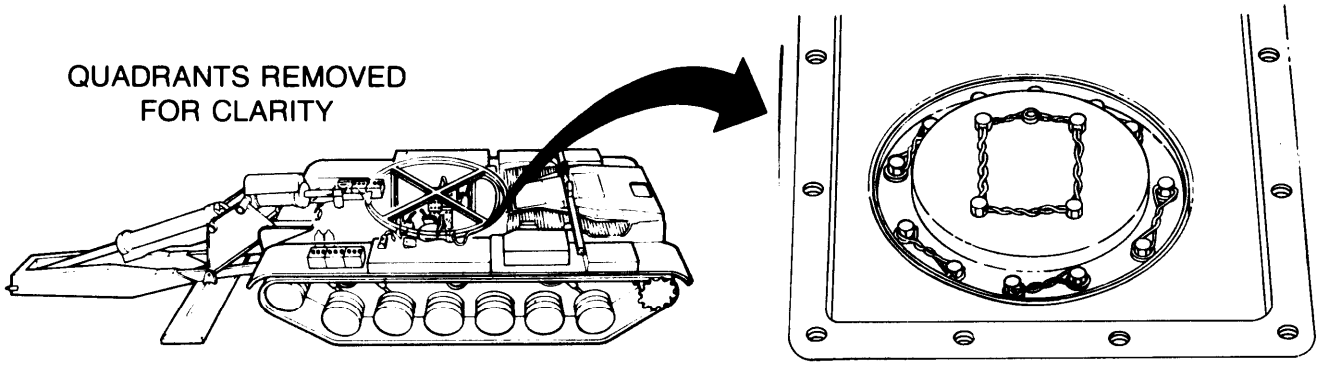

Go on to Sheet 2

TA248129

FUEL PUMP REPLACEMENT - RIGHT FUEL TANK (Sheet 2 of 6)

REMOVAL:

1. Using cutting pliers, cut lockwire (A) on 12 screws (B).

2. Using 1/2 inch socket, remove 12 screws and washers (B) securing fuel pump access cover (C) to fuel tank.

3. Using cutting pliers, cut lockwire (D) securing five screws (E).

4. Using 9/16 inch socket, remove four of five screws (E) securing access cover (C) to fuel pump mounting bracket (underneath cover).

5. Using 9/16 inch socket, loosen, but do not remove, the fifth screw (E).

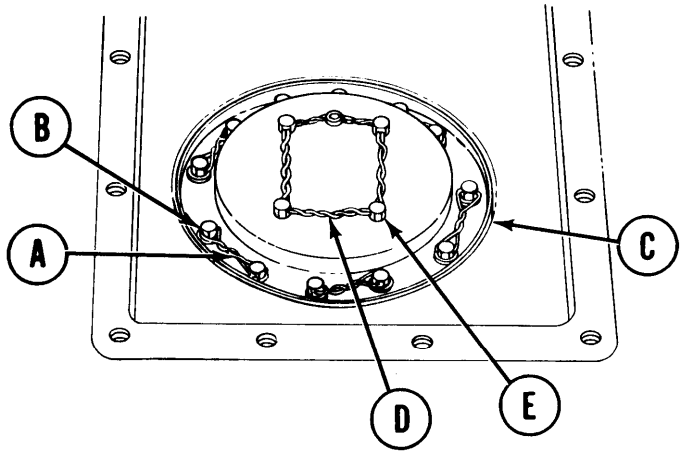

6. Swivel access cover (C) on fifth screw (E) until you can remove mounting bracket (F) with fuel pump (G) attached part way out of fuel tank.

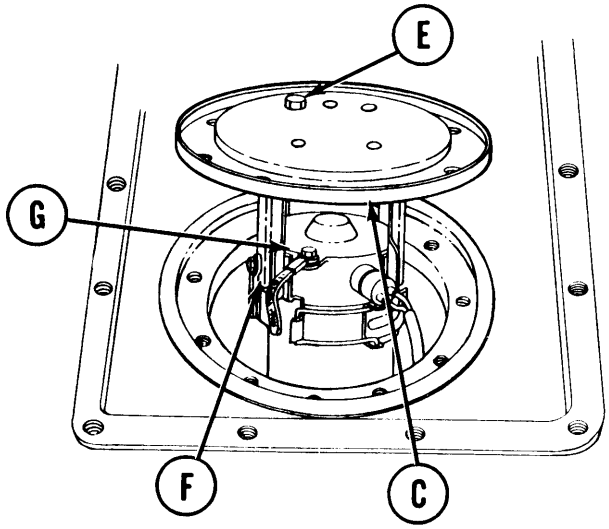

Go on to Sheet 3

TA248130

FUEL PUMP REPLACEMENT - RIGHT FUEL TANK (Sheet 3 of 6)

7. Disconnect electrical connector (H) by pulling out.

8. Using flat-tip screwdriver, loosen hose clamp (J).

9. Remove hose (K) from fuel pump.

NOTE

Use cloth to cover parts of fuel pump when removing. Discard cloth in accordance with local procedures.

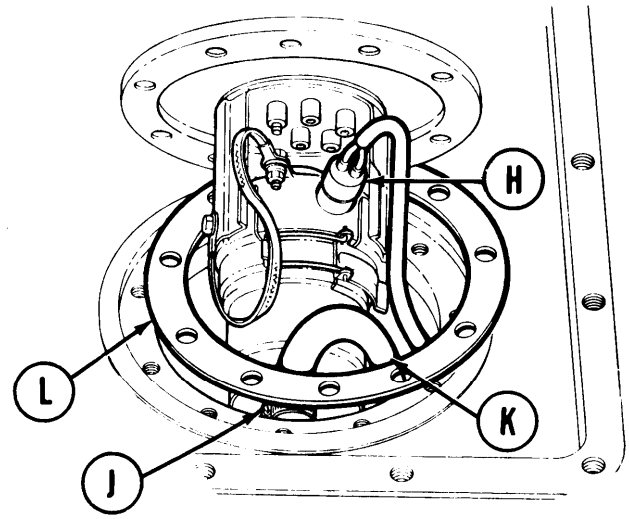

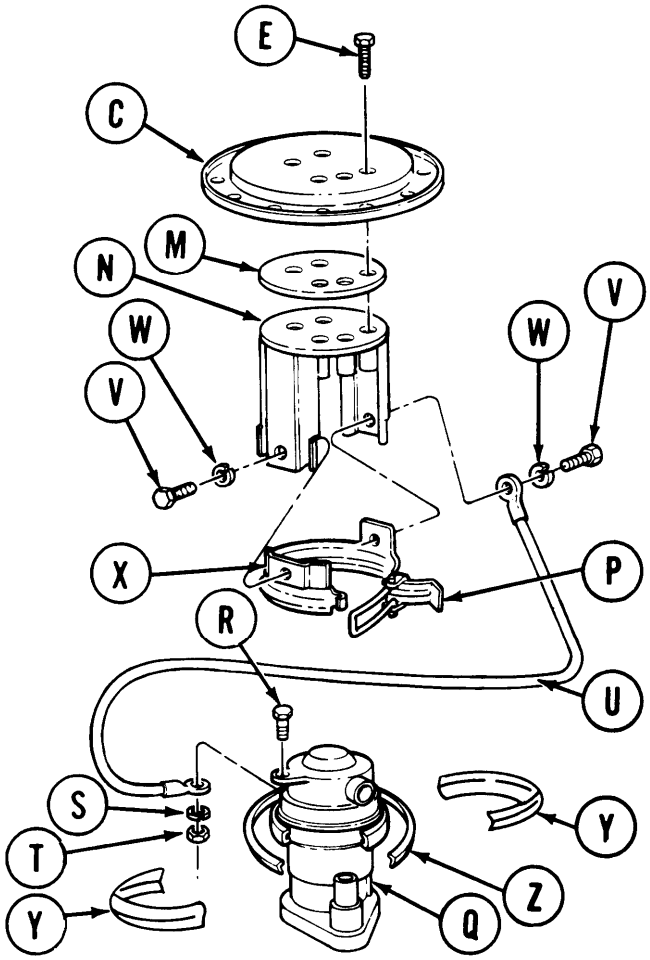

10. Remove gasket (L) from fuel tank opening and throw away.

11. Remove remaining screw (E) from access cover (C).

12. Separate access cover (C), gasket (M), and mounting bracket (N). Throw gasket away.

13. Using fingers, open clamp lever (P).

14. Remove fuel pump (Q) from mounting bracket (N).

15. Using cross-tip screwdriver and wrench, remove screw (R), lockwasher (S), and nut (T) securing ground lead (U) to pump (Q).

16. Remove ground lead (U) from pump (Q).

17. Using 7/16 inch socket, remove two screws (V) and lockwashers (W) securing lead (U) and clamp (X) to bracket (N).

18. Remove lead (U) and clamp (X).

19. Using hands, remove two clamps (Y), and packing (Z) from pump (Q).

Go on to Sheet 4

TA248131

FUEL PUMP REPLACEMENT - RIGHT FUEL TANK (Sheet 4 of 6)

INSTALLATION:

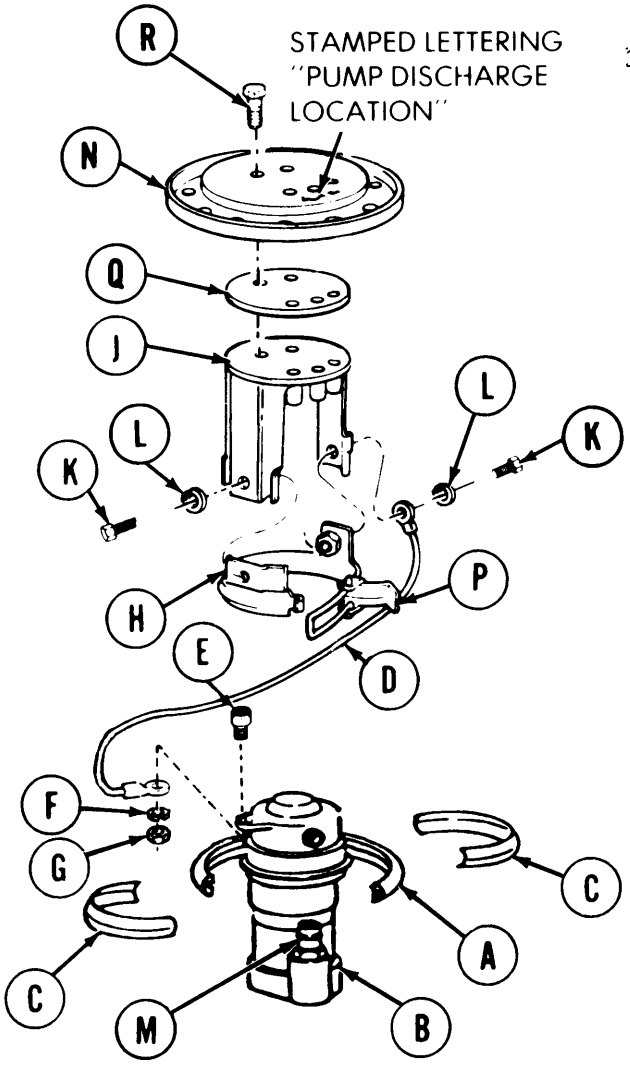

1. Position packing (A) around pump (B) and, using hands, install clamps (C) around packing (A) and pump (B).

2. Using screwdriver and 3/8 inch wrench, secure ground lead (D) to fuel pump (B) with screw (E), lockwasher (F), and nut (G).

3. Using 7/16 inch socket, secure ground lead (D) and clamp (H) to bracket (J) with two screws (K) and two lockwashers (L).

4. Position fuel pump (B) in mounting bracket (J) so that pump discharge port (M) will be directly beneath stamped lettering "PUMP DISCHARGE LOCATION" on access cover (N). Lock pump in bracket by closing clamp lever (P).

5. Position new gasket (Q) on mounting bracket (J). Apply sealing compound to threads of one screw (R). Install one screw (R) through access cover (N) and gasket (Q) into mounting bracket (J). Leave screw (R) loose.

Go on to Sheet 5

TA248132

FUEL PUMP REPLACEMENT - RIGHT FUEL TANK (Sheet 5 of 6)

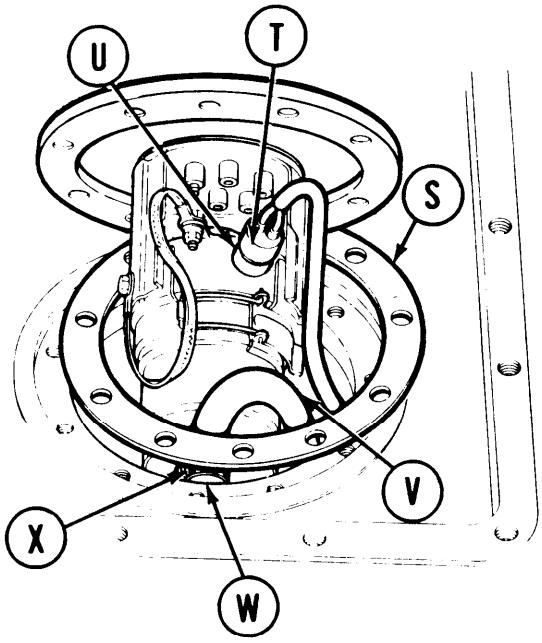

6. Place new gasket (S) over opening in fuel tank.

7. Place silicone compound on electrical lead (T).

8. Place fuel pump close to opening of fuel tank. Connect electrical lead (T) to electrical connector (U).

9. Place hose (V) on pump outlet port (W). Using screwdriver, tighten clamp (X) on hose.

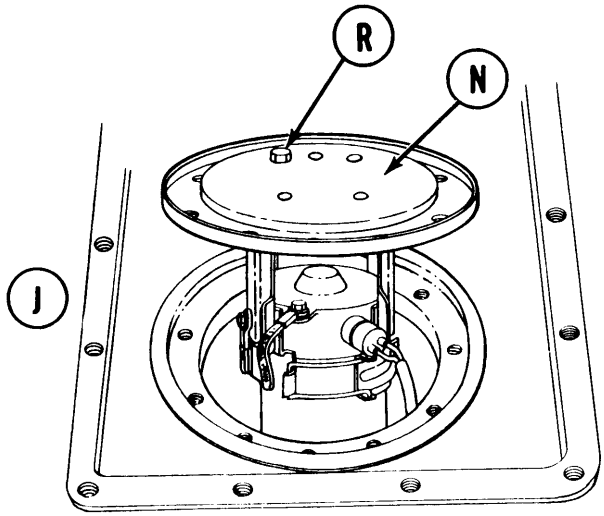

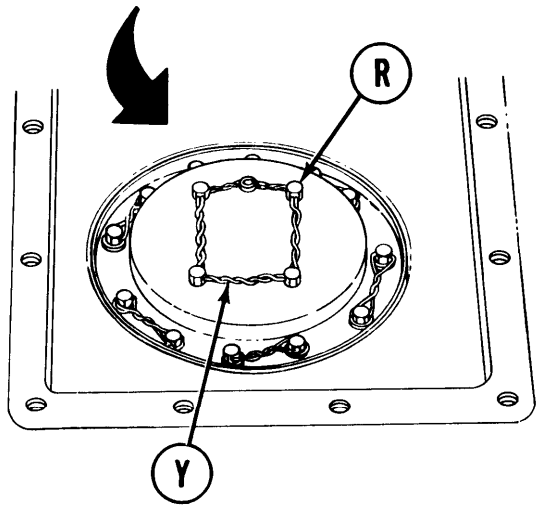

10. Swivel access cover (N) on single installed screw (R) to work fuel pump into position in fuel tank.

11. Position access cover and gasket on mounting bracket (J).

12. Apply sealing compound to threads of remaining four screws (R). Using 9/16 inch socket, install and tighten all five screws (R). Secure screws with lockwire (Y).

Go on to Sheet 6

TA248133

FUEL PUMP REPLACEMENT - RIGHT FUEL TANK (Sheet 6 of 6)

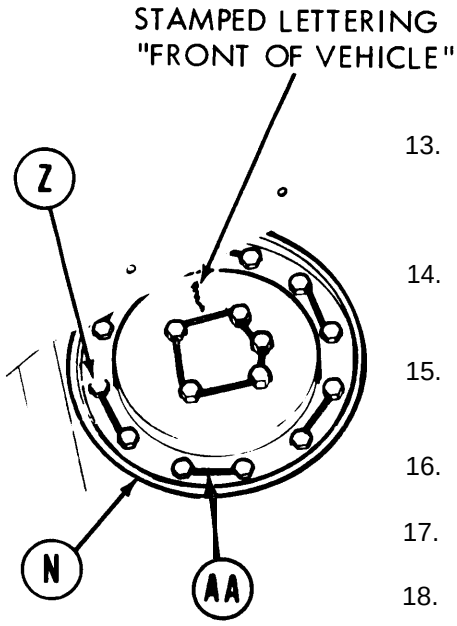

13. Position access cover (N) over fuel tank opening so that lettering “FRONT OF VEHICLE” stamped on cover is facing toward front of tank.

14. Using 1/2 inch socket, install 12 screws and 12 washers (Z) securing access cover (N).

15. Using torque wrench, tighten screws to 10-15 lb-ft (14-20 NŽm).

16. Secure screws with lockwire (AA).

17. Open fuel tank crossover valve (TM 5-5420-202-10).

18. Fill fuel tanks (TM 5-5420-202-10).

19. Check for operation of fuel pump.

20. Replace floor rear access cover (page 17- 8).

End of Task

TA248134

FUEL PUMP REPLACEMENT-LEFT FUEL TANK (Sheet 1 of 9)

PROCEDURE INDEX

PROCEDURE	PAGE
Removal	7-11
Installation	7-16

TOOLS: 1/4 in. combination box and open end wrench
1/2 in. combination box and open end wrench
1/2 in. socket with 3/8 in. drive
Ratchet with 3/8 in. drive
Diagonal cutting pliers
Torque wrench with 3/8 in. drive (0-200 lb-in) (0-23 N m)
Slip joint pliers
Flat-tip screwdriver

SUPPLIES: Wire (Item 61, Appendix D)
Gasket
Lockwashers

REFERENCE: TM 5-5420-202-10

PRELIMINARY PROCEDURES: Isolate left fuel tank (TM 5-5420-202-10)
Drain left fuel tank (page 7-184)
Remove powerplant (page 5-2)

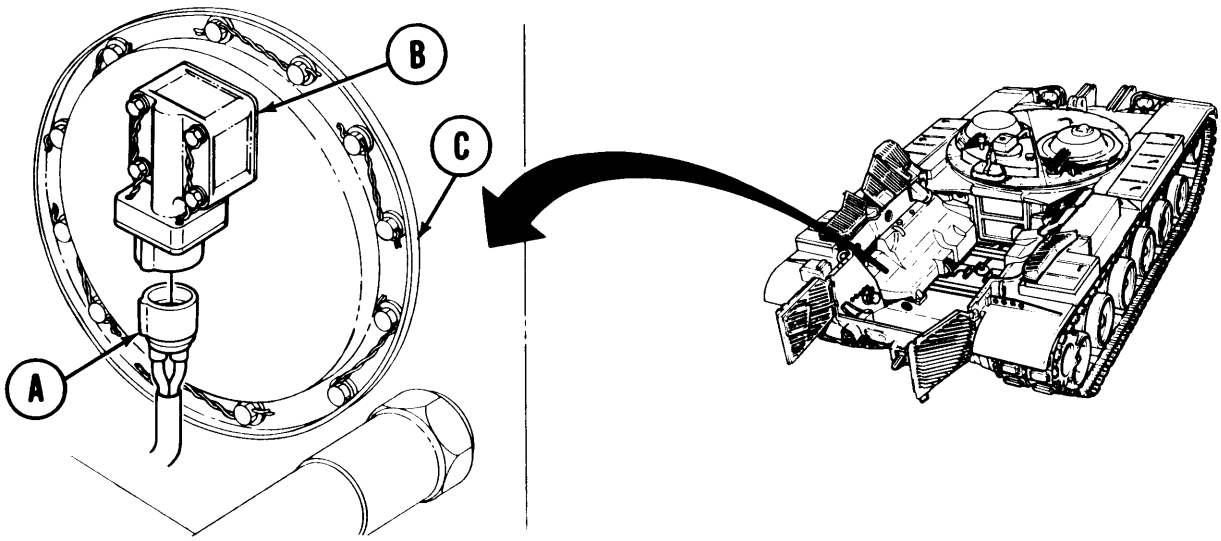

REMOVAL:

1. Using hands, unplug electrical lead (A) from capacitor and housing assembly (B) located on fuel pump access cover (C).

Go on to Sheet 2

TA248135

FUEL PUMP REPLACEMENT - LEFT FUEL TANK (Sheet 2 of 9)

2. Using cutting pliers, remove lockwire (D) securing four screws (E).

3. Using screwdriver, remove four screws (E) from capacitor and housing assembly (B). Slowly separate capacitor and housing assembly (B) from fuel pump access cover (C). Capacitor and housing assembly is connected to access cover (C) by electrical lead (F).

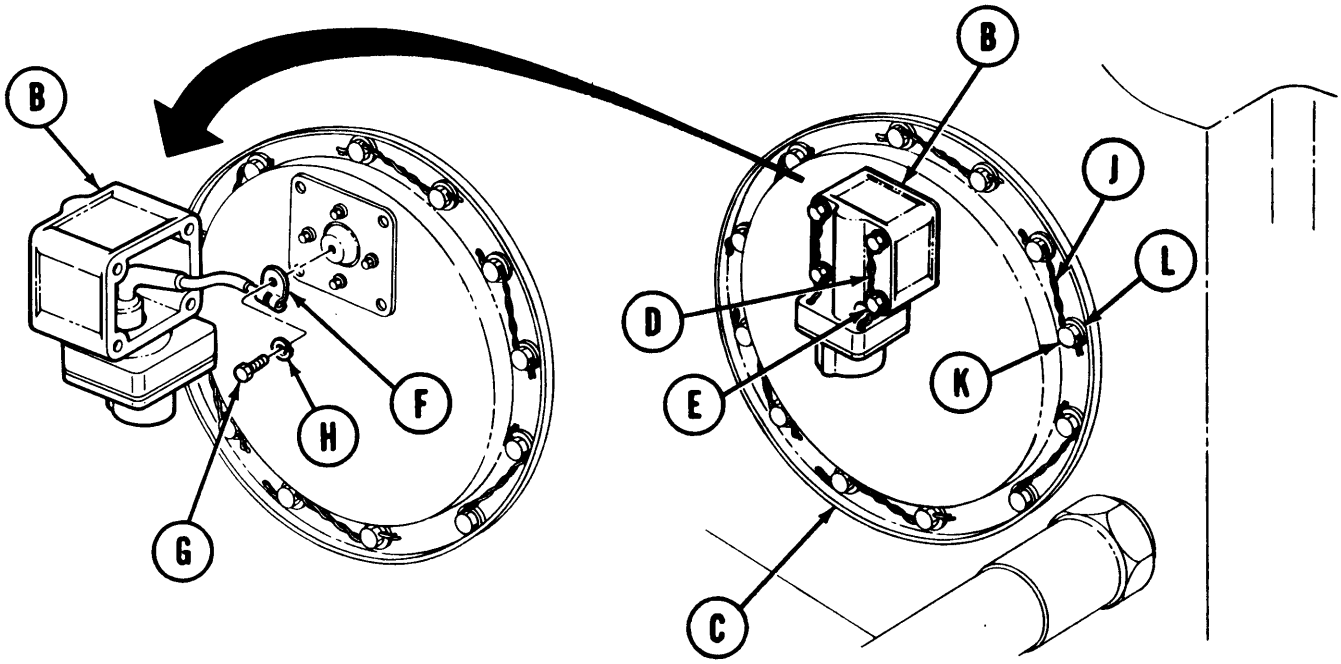

4. using screwdriver, remove screw (G) and lockwasher (H) securing electrical lead (F). Remove capacitor and housing assembly (B) from access cover (C).

5. Using cutting pliers, remove lockwire (J) securing 12 screws (K) on fuel pump access cover (C).

6. Using socket, remove 12 screws (K) and flatwashers (L).

Go on to Sheet 3

TA248136

FUEL PUMP REPLACEMENT - LEFT FUEL TANK (Sheet 3 of 9)

7. Slowly pull back fuel pump acess cover (C) to expose electrical lead (M) connecting fuel pump access cover to fuel pump (N).

8. Using hand, disconnect electrical lead (M) from fuel pump (N). Remove gasket (P) and throw it away.

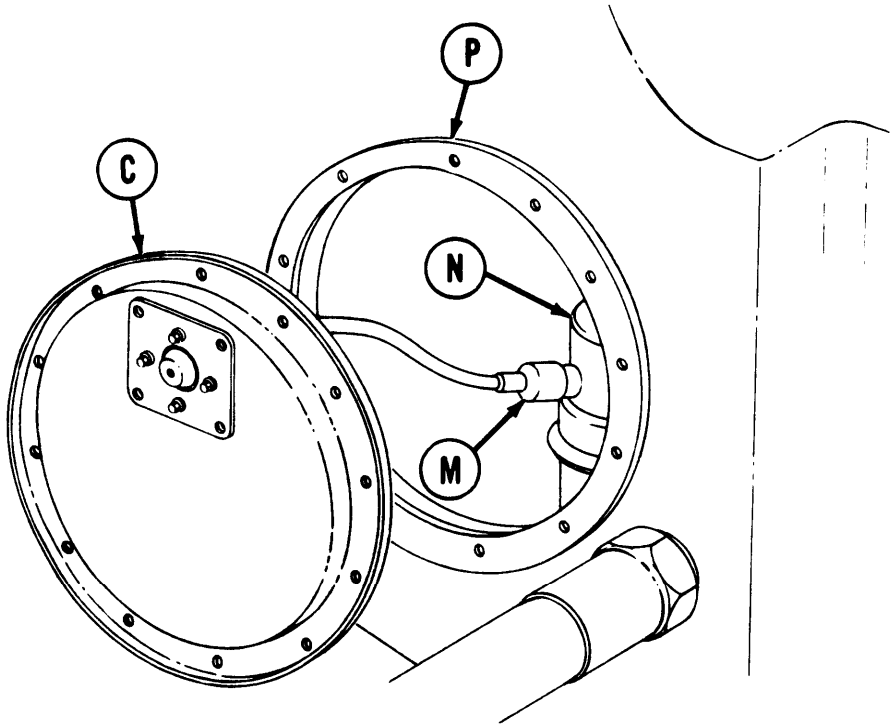

Go on to Sheet 4

TA248137

9. Using flat-tip screwdriver, loosen two hose clamps (Q) and (R) on hose (S) attached to fuel pump (N).

10. Remove bottom of hose (S) from fuel pump hose connection (T).

11. Remove top of hose (S) from fuel line (U). Remove hose (S).

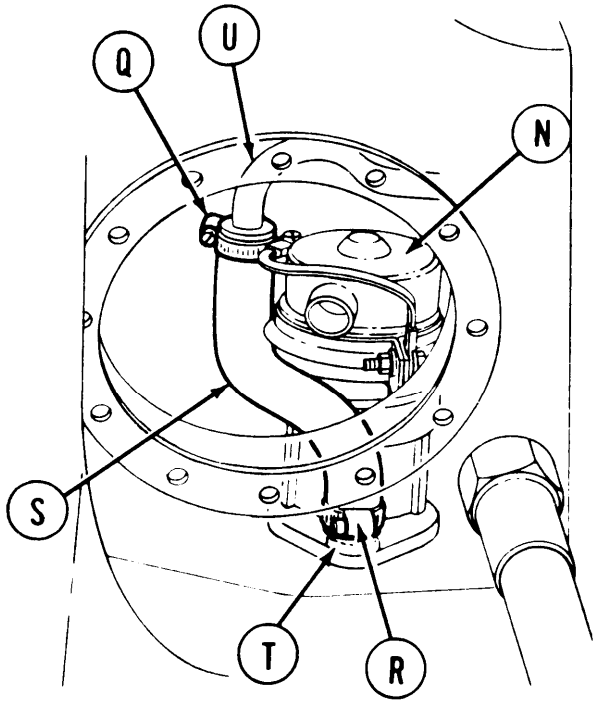

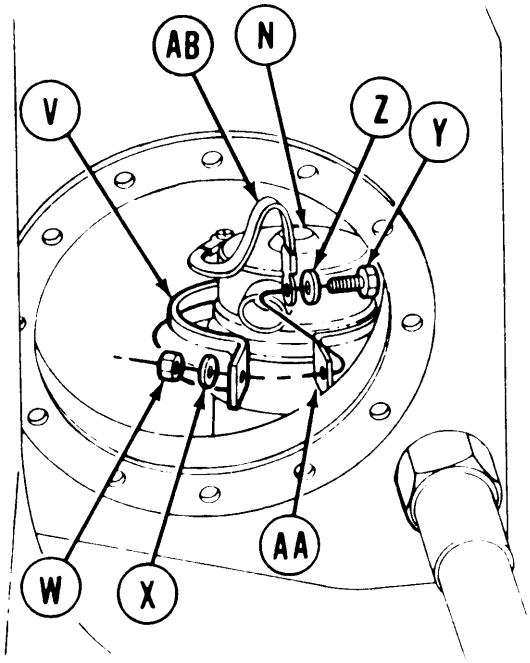

12. Hold retainer (V) in place against body of fuel pump (N).

13. Using socket and 1/2 inch wrench, remove nut (W) and washer (X) from screw (Y).

14. Remove screw (Y) and washer (Z) from mounting bracket (AA). Let ground lead (AB) fall away.

15. Hold fuel pump (N). Swing back retainer (V).

NOTE

Use cloth to cover parts of fuel pump when removing. Discard cloth in accordance with local procedures.

16. Remove fuel pump (N).

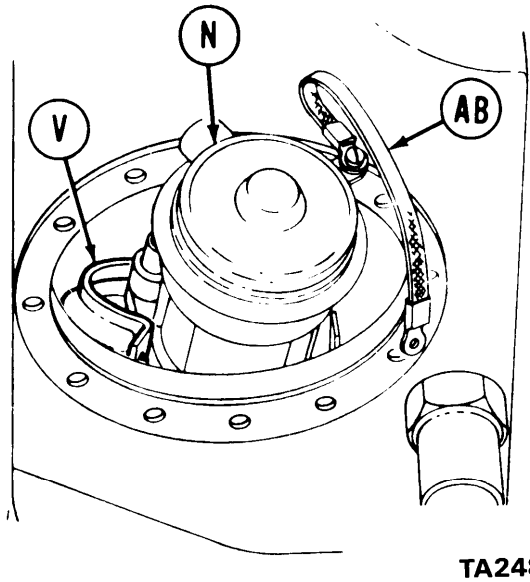

Go on to Sheet 5

TA248138

FUEL PUMP REPLACEMENT - LEFT FUEL TANK (Sheet 5 of 9)

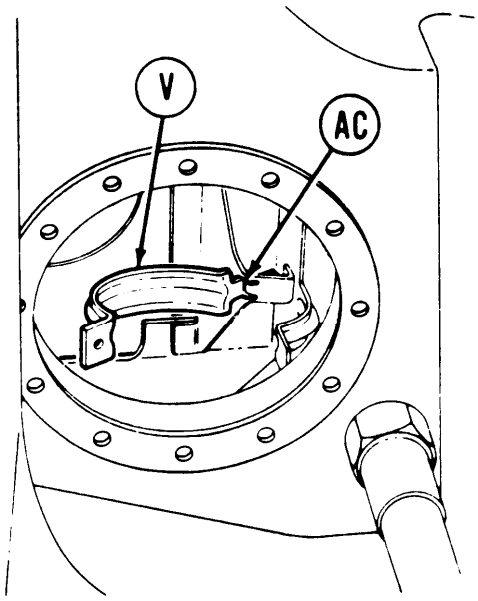

17. Remove retainer (V) from slot (AC).

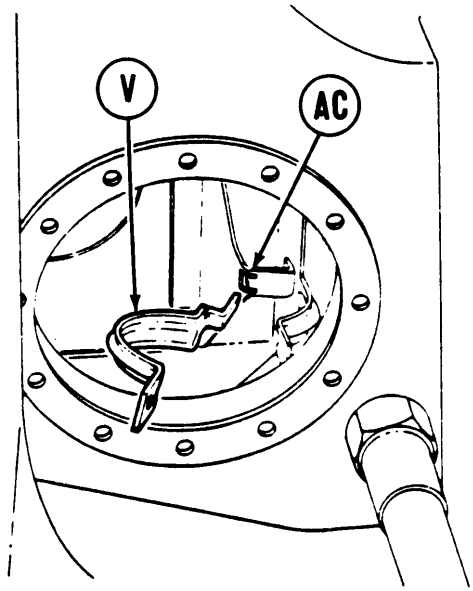

18. Remove retainer (V).

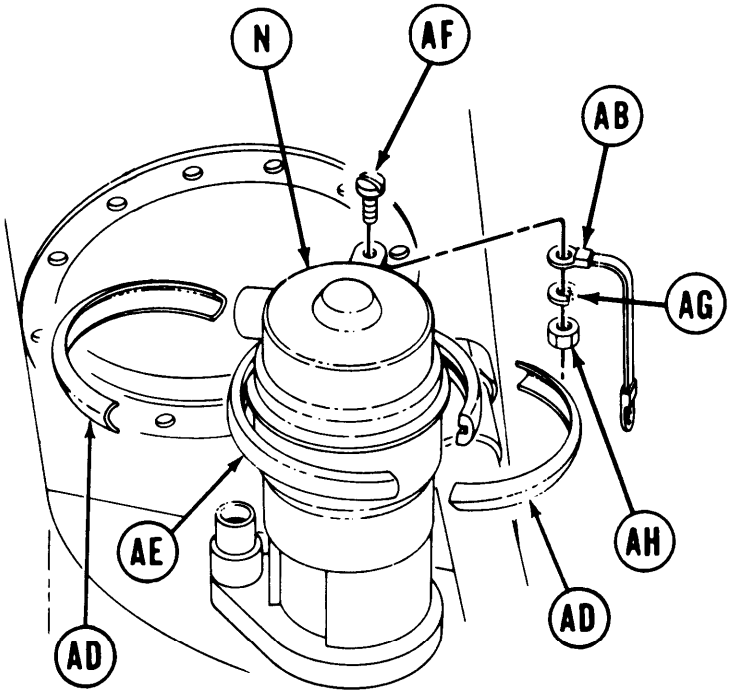

19. Using hands, remove top clamps (AD) and packing (AE) from pump (N).

20. Using flat-tip screwdriver and 1/4 inch wrench, remove screw (AF), lockwasher (AG), and nut (AH), and remove ground lead (AB) from fuel pump (N).

Go on to Sheet 6

TA248139

FUEL PUMP REPLACEMENT - LEFT FUEL TANK (Sheet 6 of 9)

INSTALLATION:

1. Using screwdriver and 1/4 inch wrench, install ground strap (A) of fuel pump (B) with screw (C), lockwasher (D), and nut (E). Using flat-tip screwdriver, tighten screw (C).

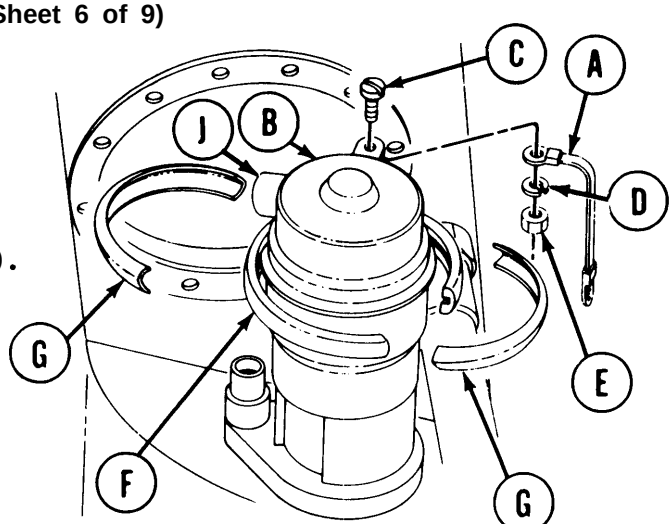

2. Using hands, position packing (F) and two clamps (G) on fuel pump (B).

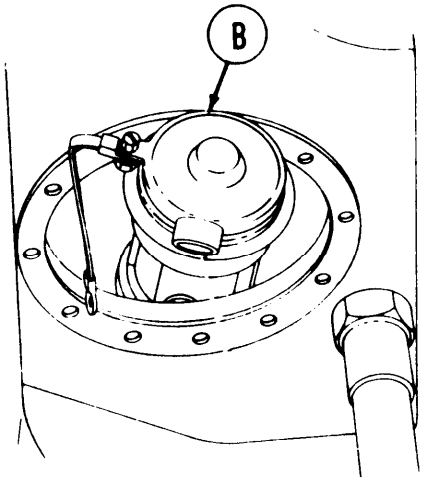

3. Insert fuel pump (B) through opening in fuel tank and onto mounting bracket (H) so that electrical connector (J) is to the left as shown.

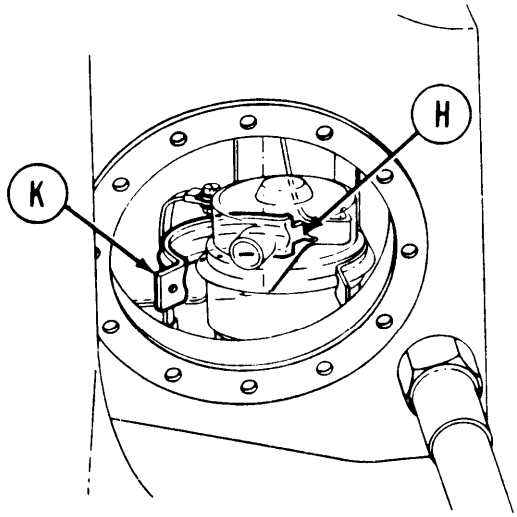

4. Insert end of retaining strap (K) into mounting bracket (H) slot.

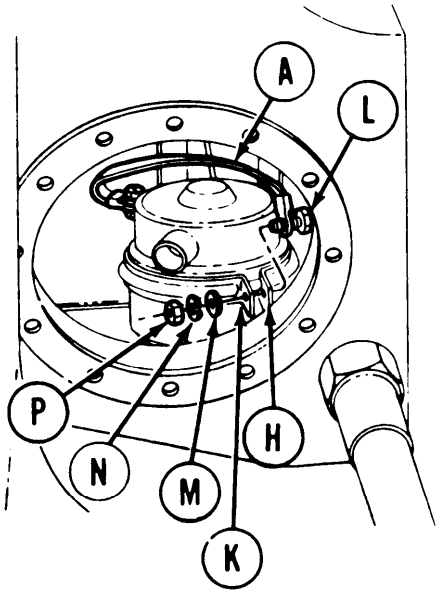

5. Position ground strap (A) terminal on mounting bracket (H). Insert screw (L) through terminal of ground strap (A), mounting bracket (H), and retaining strap (K). Using fingers, install washer (M) and lockwasher (N).

6. Using fingers, install nut (P) loosely onto screw (L).

Go on to Sheet 7

TA248140

FUEL PUMP REPLACEMENT - LEFT FUEL TANK (Sheet 7 of 9)

7. Install clamp (Q) on each end of hose (R).

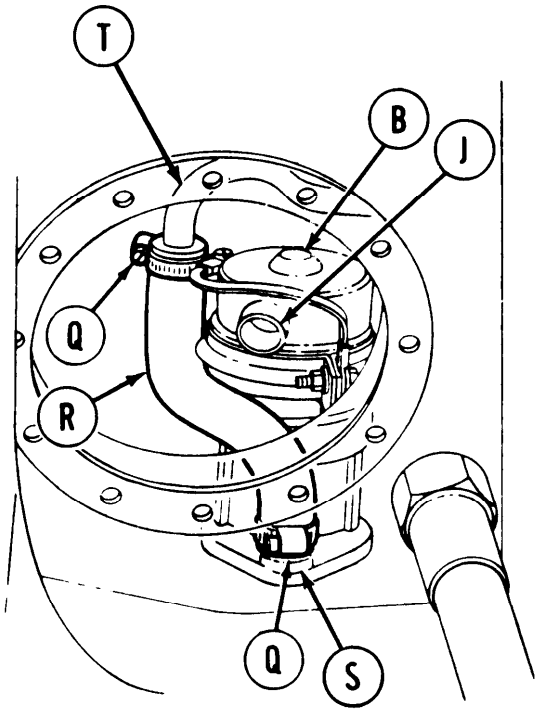

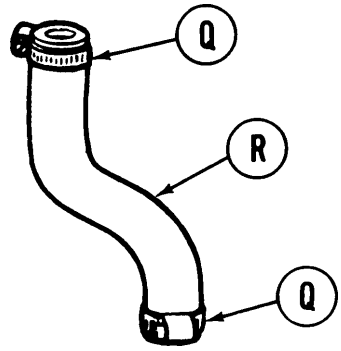

NOTE

It may be necessary to turn fuel pump (B) 1/4 turn in order to install hose (R) onto fuel pump outlet (S).

8. Install hose (R) between fuel pump outlet (S) and fuel line (T). Using flat-tip screwdriver, tighten screws on clamps (Q).

9. Turn fuel pump (B) so electrical connector (J) is clear of top clamp (Q). Using hands, connect electrical lead (U) at back of capacitor housing (V) to electrical connector (J).

10. Using 1/2 inch wrench to hold screw (L), use socket and tighten nut (P).

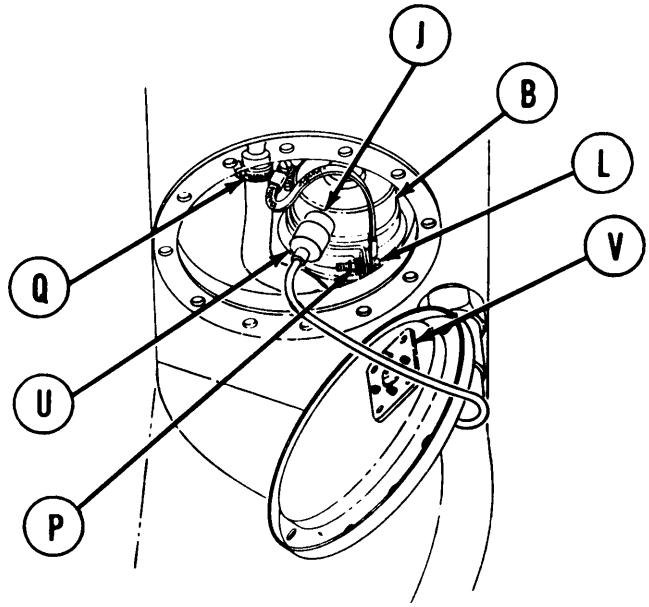

Go on to Sheet 8

TA248141

FUEL PUMP REPLACEMENT - LEFT FUEL TANK (Sheet 8 of 9)

11. Position access cover (W) with capacitor housing adapter (X) up (as shown). Install new gasket (Y) over fuel tank opening with holes alined, and using 1/2 inch socket and wrench, install twelve screws (Z) and washers (AA). Use torque wrench and tighten screws (Z) to 50 to 85 lb-in. (6-10 N m).

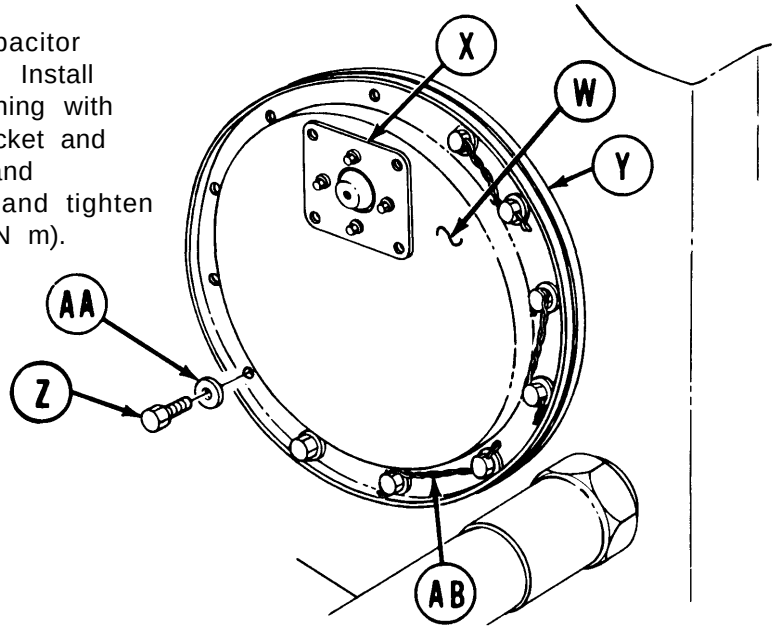

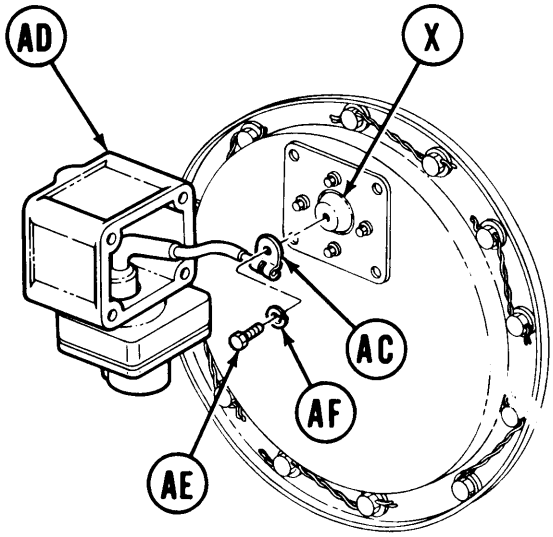

12. Using slip joint pliers, install lockwire (AB) between screws (Z).

13. Using screwdriver, secure electrical lead (AC) of housing and capacitor (AD) to adapter (X) with screw (AE) and lockwasher (AF).

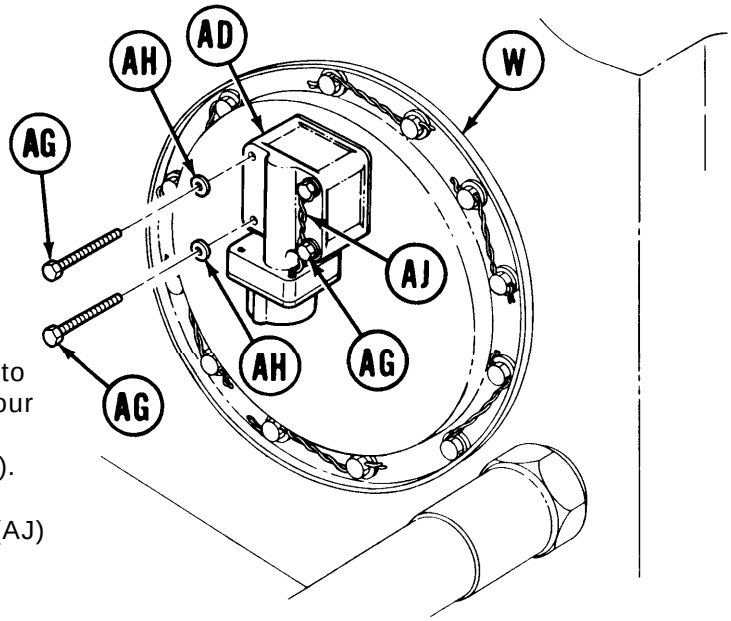

14. Position capacitor and housing (AD) onto cover (W). Using screwdriver, install four screws (AG) and washers (AH) securing capacitor and housing (AD) to cover (W).

15. Using slip joint pliers, install lockwire (AJ) into screws (AG).

Go on to Sheet 9

TA248142

FUEL PUMP REPLACEMENT - LEFT FUEL TANK (Sheet 9 of 9)

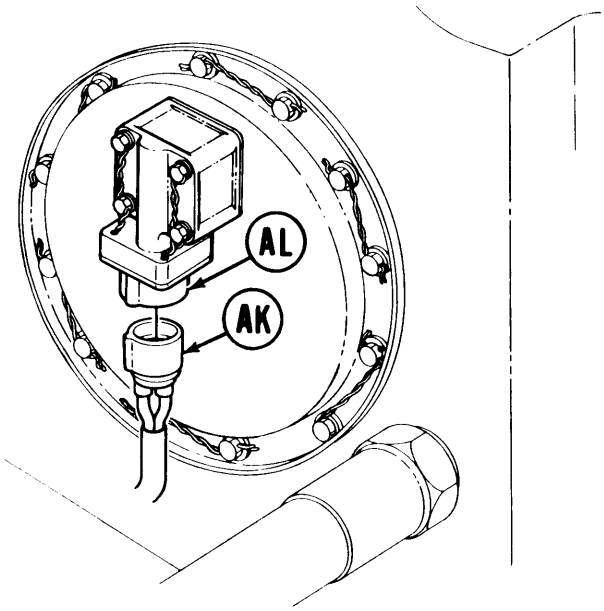

16. Install electrical lead (AK) to connector (AL).
17. Turn fuel isolate valves back to original position (TM 5-5420-202-10).
18. Fill fuel tank (TM 5-5420-202-10).
19. Install powerplant (page 5-14).

End of Task

TA248143

FUEL PUMP TO FUEL-WATER SEPARATOR HOSE ASSEMBLY REPLACEMENT (Sheet 1 of 5)

PROCEDURE INDEX

PROCEDURE	PAGE
Removal	7-20
Inspection	7-22
Installation	7-23
Test	7-23

TOOLS: 7/16 in. combination box and open end wrench
7/8 in. combination box and open end wrench

SPECIAL TOOLS: Ground hop kit (Item 31, Chapter 3, Section I)

PERSONNEL: Two

SUPPLIES: Rags (Item 65, Appendix D)
Drain pan
Sealing compound (Item 28, Appendix D)

PRELIMINARY PROCEDURE: Remove powerplant (page 5-2)

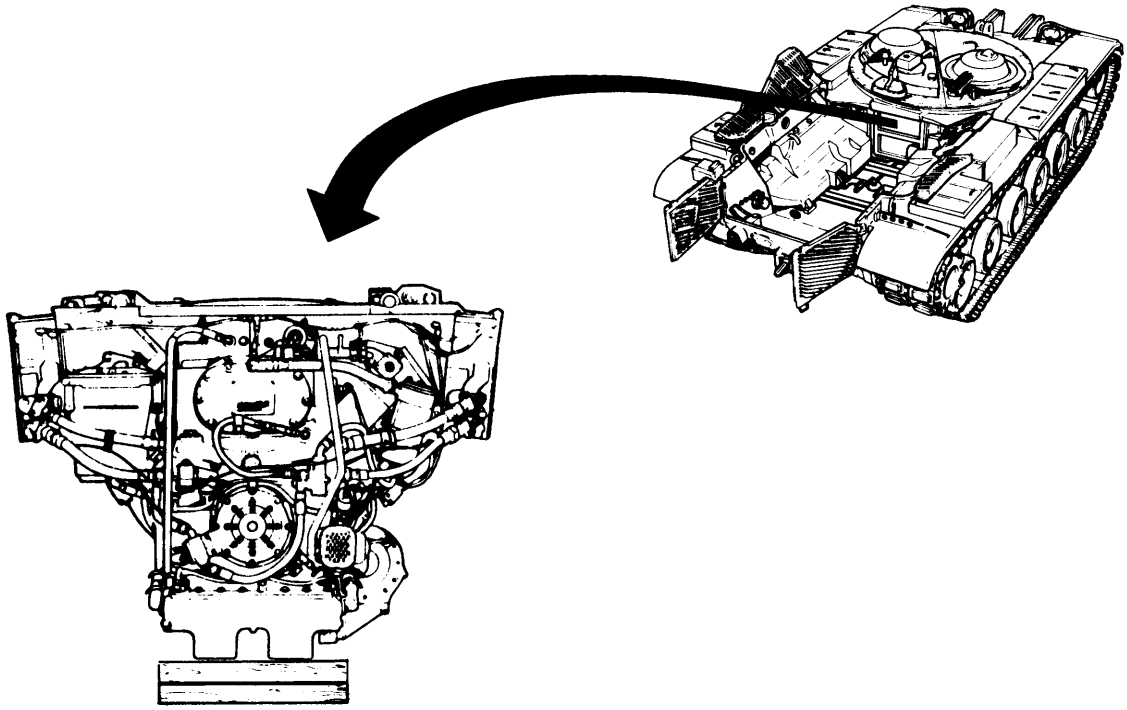

Go on to Sheet 2

TA248144

FUEL PUMP TO FUEL WATER SEPARATOR HOSE ASSEMBLY REPLACEMENT (Sheet 2 of 5)

REMOVAL:

1. Place container under manual drain valve (A).

2. Open manual drain valve (A) by turning valve handle to left.

3. Using 7/16 inch wrench, turn fuel-water separator bleeder cap (E) to the left until loose.

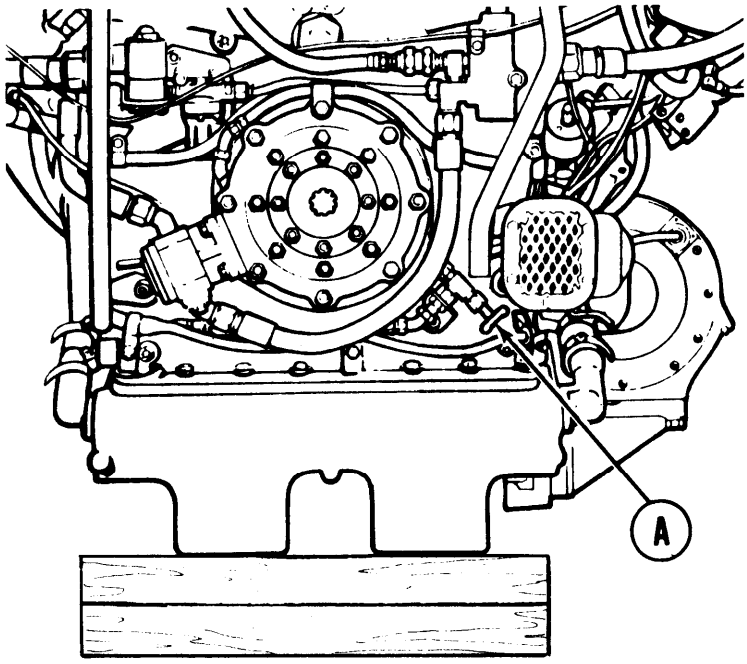

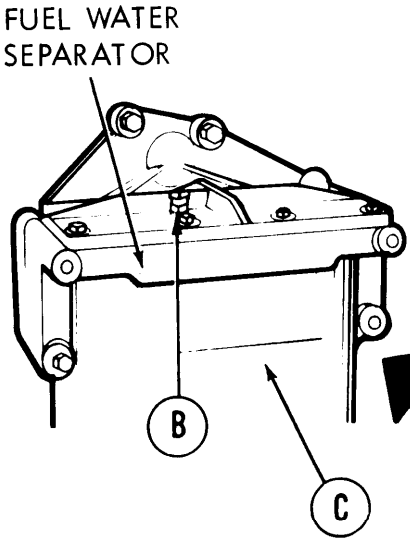

4. Allow fuel in fuel-water separator filter (C) to drain through manual drain valve (A).

5. Using 7/16 inch wrench, turn fuel-water separator bleed cap (B) to the right until snug.

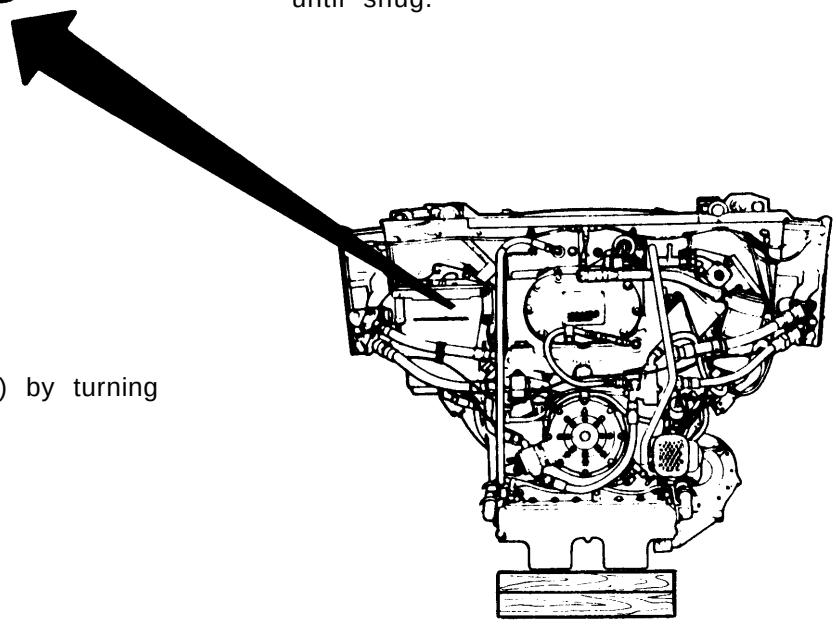

6. Close manual drain valve (A) by turning valve handle to the right.

Go on to Sheet 3

TA248145

FUEL PUMP TO FUEL WATER SEPARATOR HOSE ASSEMBLY REPLACEMENT (Sheet 3 of 5)

NOTE

Use suitable container to catch fuel spillage whenever any fuel line or fitting is loosened or removed. Use cloth to wipe any spillage. Discard cloth and drained fuel in accordance with local procedures.

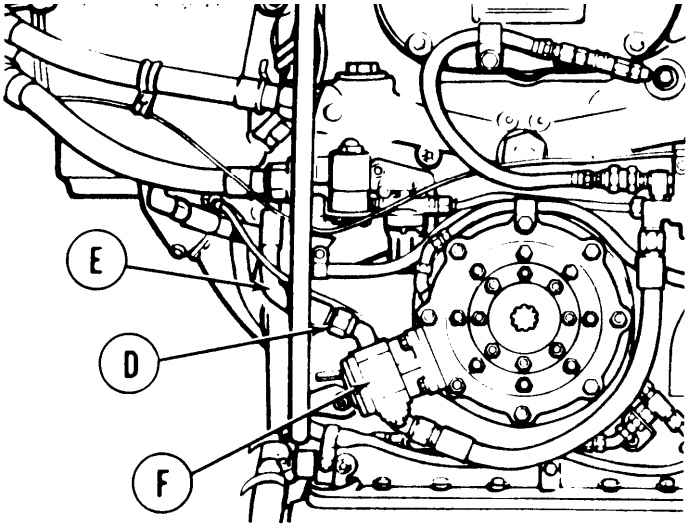

7. Using 7/8 inch wrench, loosen nut (D).

8. Disconnect hose assembly (E) from fuel pump (F).

9. Using 7/8 inch wrench, loosen nut (G) from elbow (H).

10. Disconnect hose assembly (E) from elbow (H).

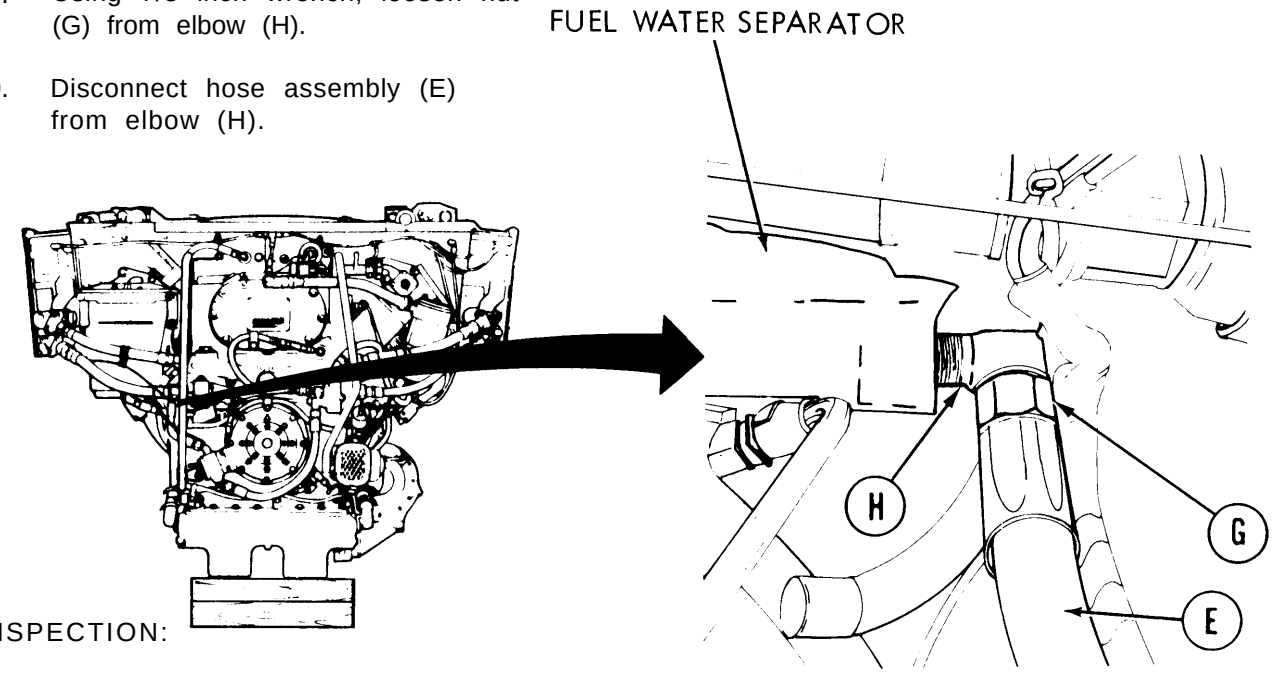

INSPECTION:

1. Check assembly components for cracks, breaks, frayed hose, crossed threads, and general serviceability.

2. Replace components as necessary.

Go on to Sheet 4

TA248146

FUEL PUMP TO FUEL WATER SEPARATOR HOSE ASSEMBLY REPLACEMENT (Sheet 4 of 5)

INSTALLATION:

NOTE

Apply sealing compound to male pipe threads before installation.

1. Install hose assembly (A) to elbow (B).
2. Using 7/8 inch wrench, tighten nut (C) to elbow (B).
3. Using 7/8 inch wrench, install hose assembly (A) to fuel pump (D).

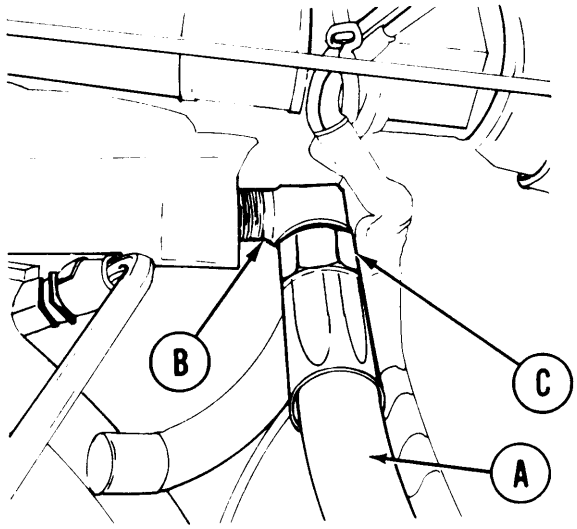

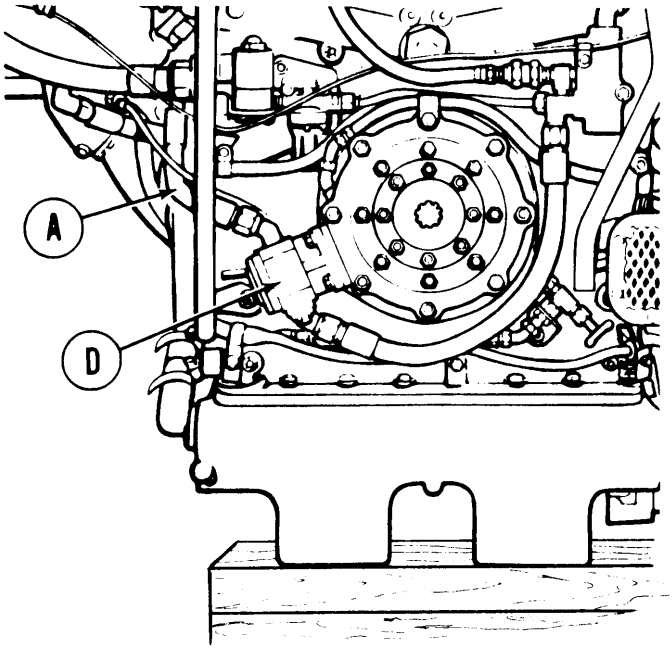

TEST:

1. Connect engine for powerplant ground hop (page 5-26).
2. Using 7/16 inch wrench, turn fuel-water separator bleed cap (A) to the left until loose.

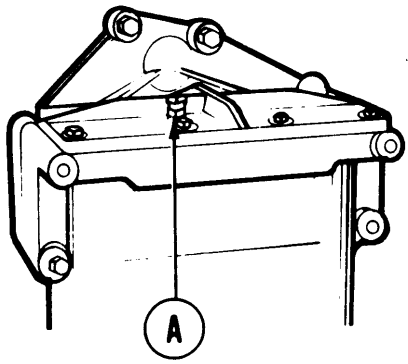

Go on to Sheet 5

TA248147

FUEL PUMP TO FUEL-WATER SEPARATOR HOSE ASSEMBLY REPLACEMENT (Sheet 5 of 5)

NOTE

It may be necessary to perform steps 6 and 7 several times until a constant fuel flow (no bubbles) from the bleed cap (A) is observed. Two persons will be required to perform steps 3 through 11.

3. Station one person in driver's compartment to operate switches.

4. Set fuel pumps switch to ON position (TM 5-5420-202-10).

5. Set MASTER BATTERY switch to ON position (TM 5-5420-202-10).

6. Second person, watch fuel-water separator bleed cap (A) until air release (bubbles) appear, then have first person set MASTER BATTERY switch to OFF.

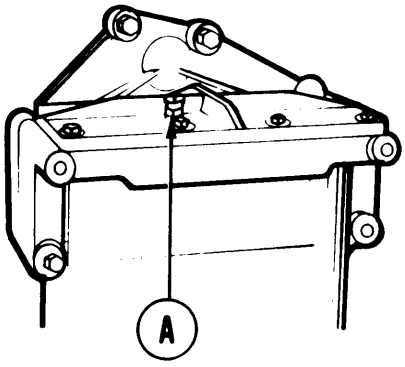

7. Wait about one minute and repeat step 5 until a constant bubble free flow is observed at bleed cap (A).

8. Second person, using 7/16 inch wrench, turn fuel-water separator bleed cap (A) to the right until snug.

9. Check for leaks. Tighten or replace components as necessary.

10. Perform operational check of automatic drain (page 7-223).

11. Set MASTER BATTERY switch to OFF position (TM 5-5420-202-10).

12. Disconnect engine from powerplant ground hop (page 5-40).

13. Install powerplant (page 5-14).

End of Task

TA248148

FUEL BACKFLOW VALVE REPLACEMENT (Sheet 1 of 4)

PROCEDURE INDEX

PROCEDURE	PAGE
Removal	7-25
Cleaning and Inspection	7-27
Installation	7-27

TOOLS: 9/16 in. combination box and open end wrench
5/8 in. combination box and open end wrench
7/8 in. combination box and open end wrench
1 in. combination box and open end wrench
7/16 in. socket with 1/2 in. drive
Ratchet with 1/2 in. drive

SUPPLIES: Rags (Item 65, Appendix D)
Dry cleaning solvent (Item 55, Appendix D)
Sealing compound (Item 27, Appendix D)
Fuel line plugs
Lockwashers
Gloves (Item 69, Appendix D)
Goggles (Item 70, Appendix D)

PRELIMINARY PROCEDURE: Remove lower engine access panel (page 17-13)

NOTE

Use suitable container to catch fuel spillage whenever any fuel line or fitting is loosened or removed. Use cloth to wipe any spillage. Discard cloth and drained fuel in accordance with local procedures.

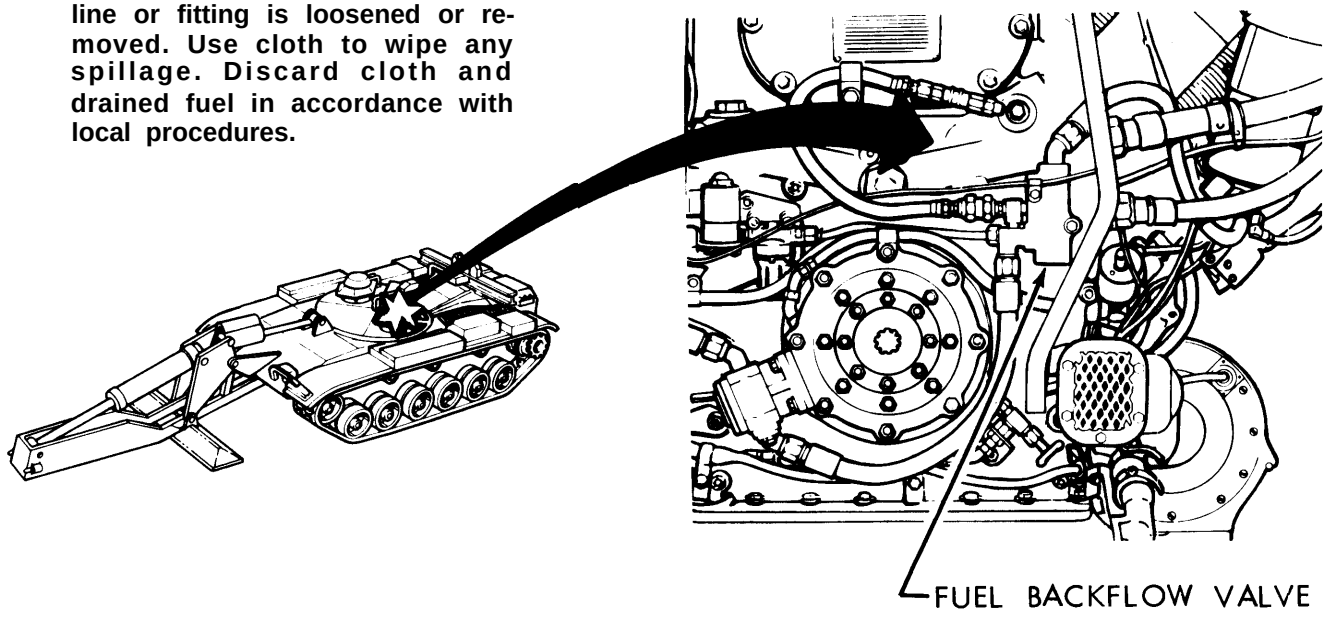

TA248149

Go on to Sheet 2

FUEL BACKFLOW VALVE REPLACEMENT (Sheet 2 of 4)

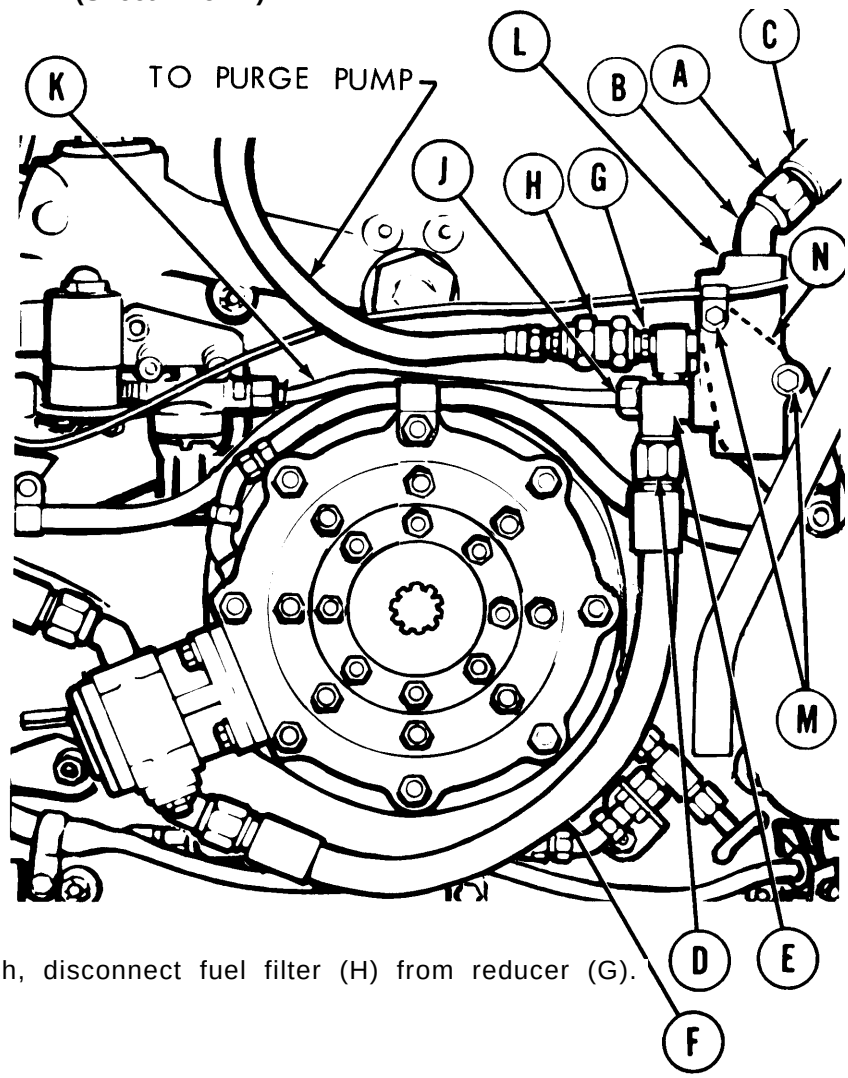

REMOVAL:

1. Using 7/8 inch combination wrench, loosen nut (A) from elbow (B) and disconnect hose assembly (C).

2. Insert fuel line plug in hose assembly (C).

3. Using 7/8 inch combination wrench, loosen nut (D) from elbow (E) and disconnect hose assembly (F).

4. Insert fuel line plug in hose assembly (F).

5. Using 9/16 inch combination wrench, hold reducer (G).

6. Using 1 inch combination wrench, disconnect fuel filter (H) from reducer (G).

7. Using 5/8 inch combination wrench, loosen nut (J). Remove tube assembly (K) from fuel backflow valve (L).

8. Using 7/16 inch socket, remove two screws, flat washers, and lockwashers (M).

9. Remove fuel backflow valve (L) from bracket (N).

Go on to Sheet 3

TA248150

FUEL BACKFLOW VALVE REPLACEMENT (Sheet 3 of 4)

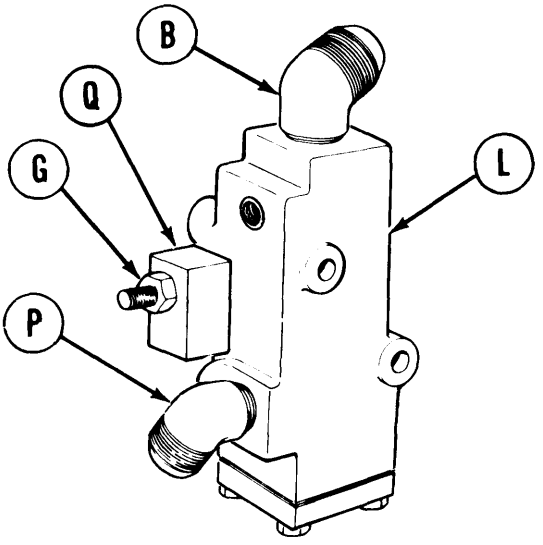

10. Using pipe wrench, remove elbows (B) and (P) from fuel backflow valve (L).

11. Using pipe wrench (L), remove tee (Q) from fuel backflow valve (L).

12. Using adjustable wrench on tee (Q), use 9/16 inch combination wrench to remove reducer (G).

CLEANING AND INSPECTION:

WARNING

Dry cleaning solvent P-D-680 is toxic and flammable. To prevent personal injury, wear protective goggles and gloves and use only in a well-ventilated area. Avoid contact with skin, eyes, and clothes and don't breathe vapors. Do not use near open flame or excessive heat. The flash point for Type #l Dry Cleaning Solvent is 100°F (38°C) and for Type #2 is 138°F (50°c). If you become dizzy while using cleaning solvent, get fresh air immediately and get medical aid. If contact with eyes is made, wash your eyes with water and get medical aid immediately.

1. Using clean cloth and solvent, clean fittings and mounting hardware thoroughly.

2. Inspect fittings and mounting hardware for nicks, cracks, wear or thread damage Replace if required.

INSTALLATION:

NOTE

Coat threads of fittings with sealing compound before installation.

1. Using pipe wrench, install elbows (A) and (B) to fuel backflow valve (C).

2. Using adjustable wrench, install tee (D) to fuel backflow valve (C).

3. Mount fuel backflow valve assembly (E) to bracket.

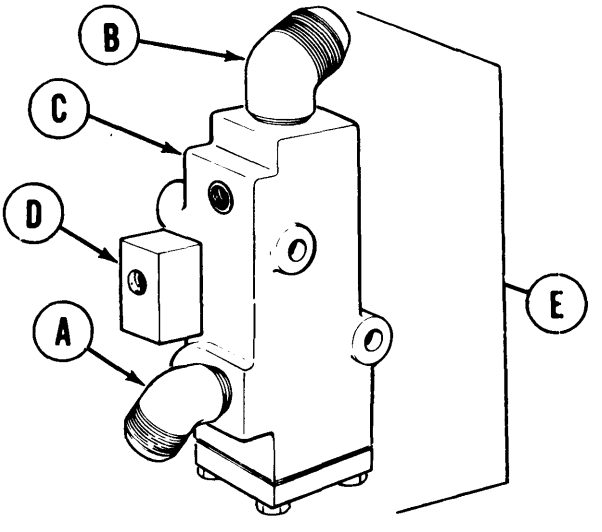

TA248151

Go on to Sheet 4

FUEL BACKFLOW VALVE REPLACEMENT (Sheet 4 of 4)

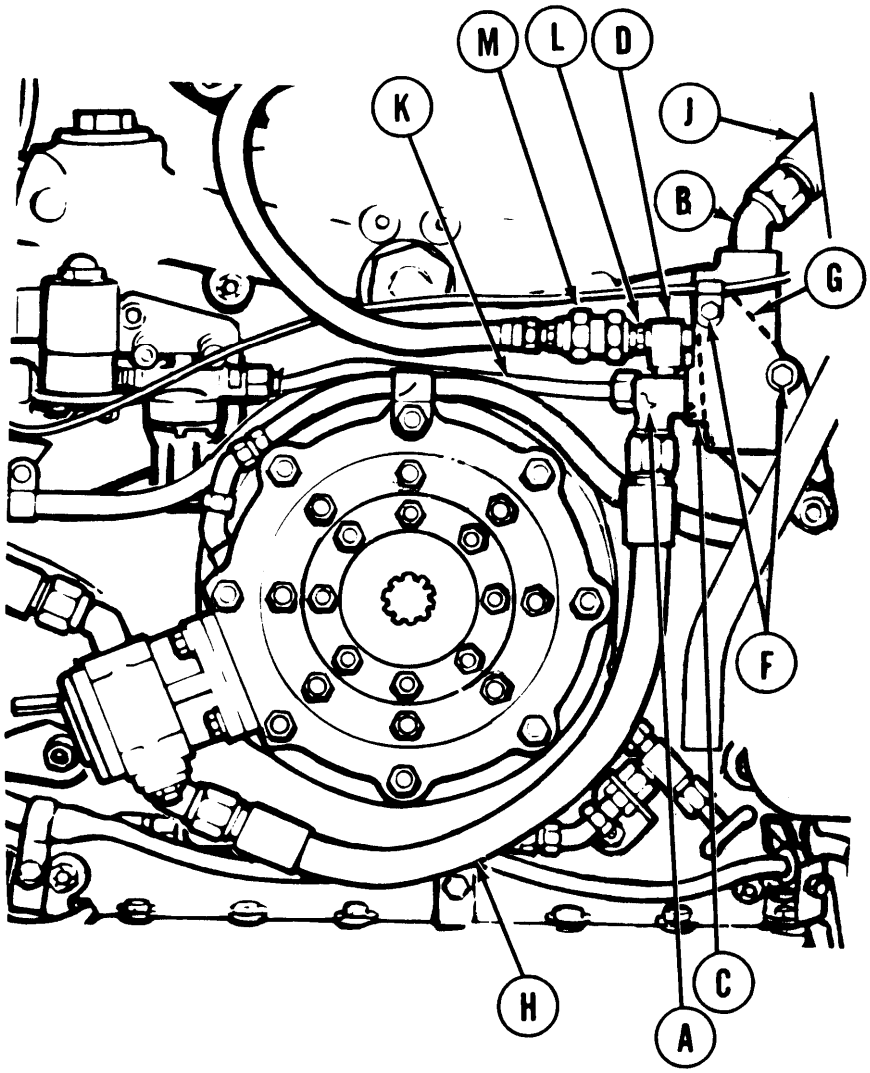

4. Using 7/16 inch socket, install two screws, flat washers, and lockwashers (F) to bracket (G).

5. Remove fuel plug from hose assembly (H).

6. Using 7/8 inch combination wrench, connect hose assembly (H) to elbow (A).

7. Remove fuel plug from hose assembly (J).

8. Using 7/8 inch combination wrench, connect hose assembly (J) to elbow (B).

9. Using 5/8 inch combination wrench, connect tube assembly (K) to fuel backflow valve (C).

10. Install reducer (L) to tee (D).

11. Using 1 inch combination wrench, reconnect fuel filter (M) to reducer (L).

12. Install lower engine access panel (page 17-14).

End of Task

TA248152

TUBE ASSEMBLY (FUEL INJECTION PUMP INLET TO BULKHEAD ELBOW) REPLACEMENT (Sheet 1 of 5)

PROCEDURE INDEX

PROCEDURE	PAGE
Removal	7-29
Cleaning and Inspection	7-31
Installation	7-31

TOOLS: 5/16 in. combination box and open end wrench
3/4 in. combination box and open end wrench
7/8 in. combination box and open end wrench
1 in. combination box and open end wrench
Wire brush
3/8 in. socket with 3/8 in. drive
Ratchet with 3/8 in. drive

SPECIAL TOOLS: Ground hop kit (Item 31, Chapter 3, Section I)

SUPPLIES: Rags (Item 65, Appendix D)
Drain pan
Dry cleaning solvent (Item 55, Appendix D)
Lockwashers
Self-locking nuts
Gloves (Item 69, Appendix D)
Goggles (Item 70, Appendix D)

PRELIMINARY PROCEDURES: Remove powerplant (page 5-2)
Remove cooling fans (page 9-55)

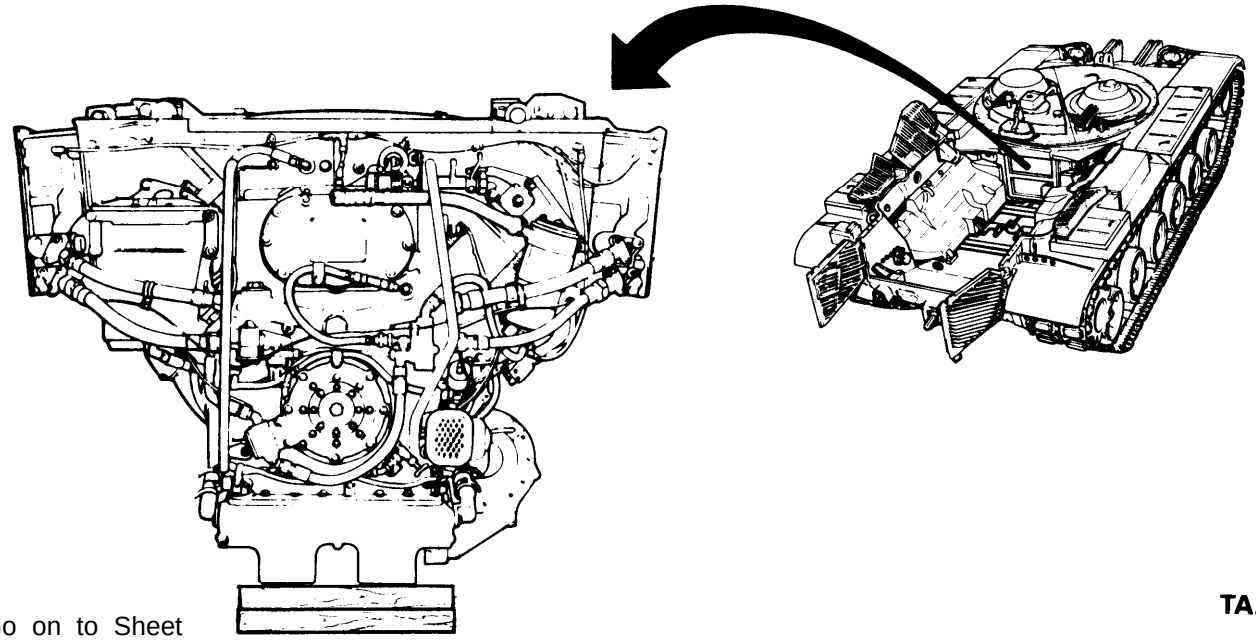

TA248153

Go on to Sheet

TUBE ASSEMBLY (FUEL INJECTION PUMP INLET TO BULKHEAD ELBOW) REPLACEMENT (Sheet 2 of 5)

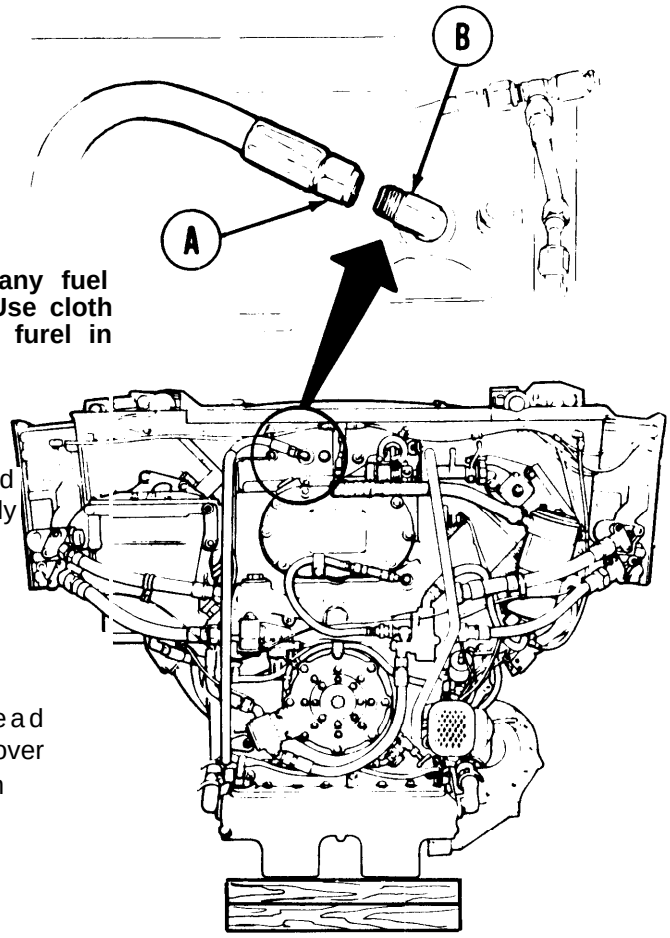

NOTE

Use suitable container to catch fuel whenever any fuel line or connection is loosenec or disconnected. Use cloth to wipe any spillage. Discard cloth and drained furel in accordance with local procedures.

REMOVAL:

1. Position drain pan to catch spilled fuel and using 7/8 inch wrench, remove hose assembly (A) from bulkhead elbow (B).

2. Using 1 inch wrench to hold nut (C) of bulkhead elbow (B) and 7/8 inch wrench, remove tube assembly (D) from bulkhead elbow (B).

3. Using 3/ inch wrench to hold bulkhead elbow (B) and 1 inch open end wrench, remover nut (C), lockwasher (E) and washer (F) from bulkhead elbow (B).

4. Remove bulkhead elbow (B) from engine bulkhead.

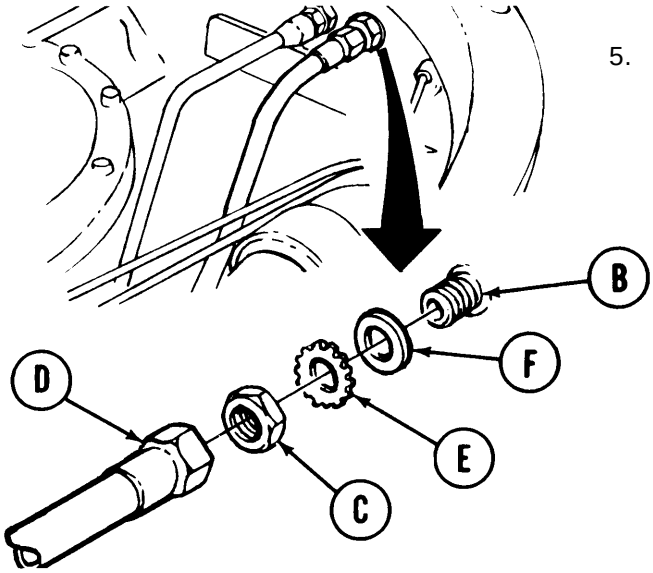

5. Using 3/8 inch socket and 5/16 inch wrench, remove two screws and self-locking nuts (G) from tube clamps (H).

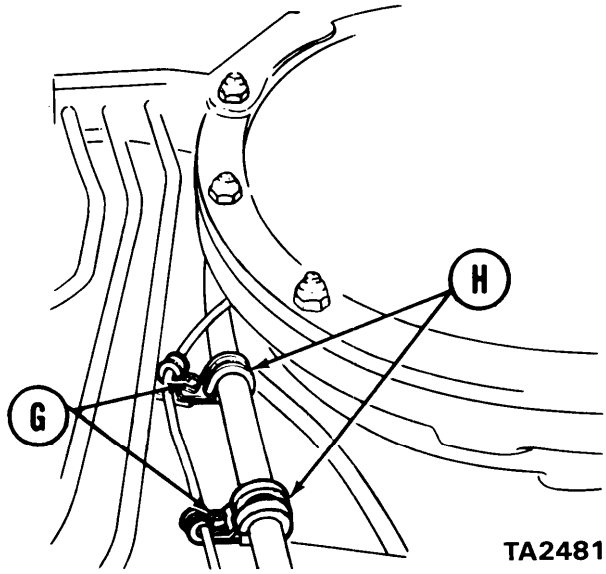

6. Using fingers, remove two tube clamps (H) from tube assembly (D)

Go on to Sheet 3

TA248154

TUBE ASSEMBLY (FUEL INJECTION PUMP INLET TO BULKHEAD ELBOW) REPLACEMENT (Sheet 3 of 5)

7. Using 7/8 inch wrench, remove tube assembly (C) from fuel injection pump adapter (J).

8. Using fingers, remove tube assembly (C) from vehicle.

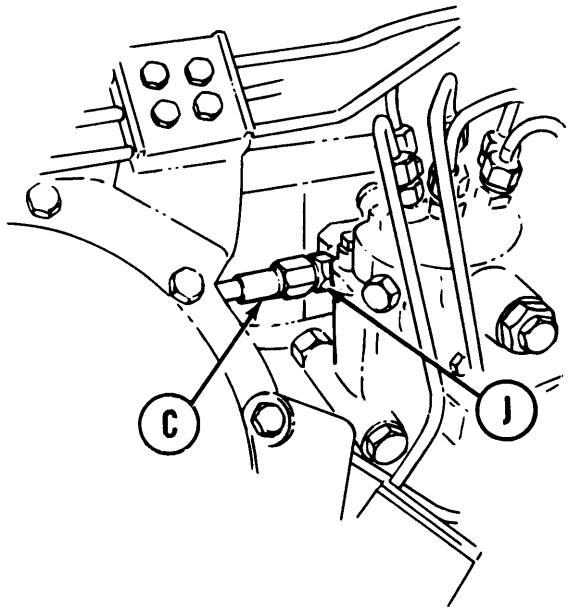

CLEANING AND INSPECTION:

WARNING

Cleaning agent specified is flammable. Use only in well ventilated areas. Keep away from flames, sparks, or heat. Do not smoke while using. Prevent contact with eyes, mouth, and/or skin. Wear rubber gloves when performing cleaning procedures.

1. Using clean rags and solvent, clean elbow and tube assembly mounting hardware thoroughly. Using wire brush, clean threaded parts.

2. Inspect elbow and tube assembly mounting hardware for bends, breaks, wear, or thread damage. Replace if required.

3. Inspect adapter on fuel injection pump for thread damage.

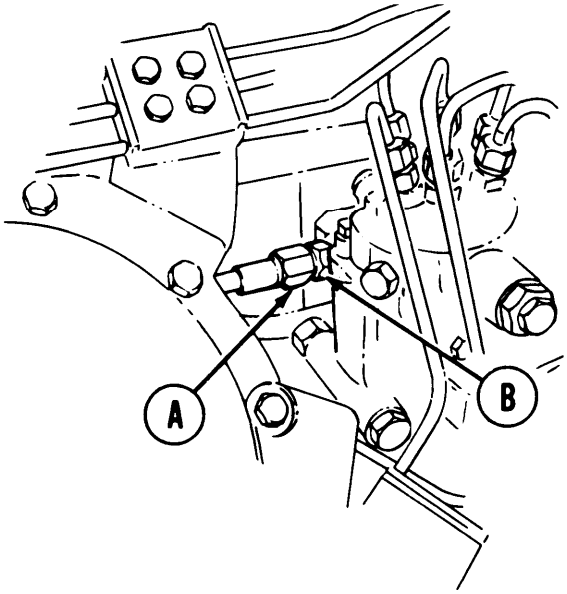

INSTALLATION:

1. Using 7/8 inch wrench, install tube assembly (A) on fuel injection pump adapter (B).

Go on to Sheet 4

TA248155

TUBE ASSEMBLY (FUEL INJECTION PUMP INLET TO BULKHEAD ELBOW) REPLACEMENT (Sheet 4 of 5)

2. Using fingers, install bulkhead elbow (C) in hole in front side of engine bulkhead.

3. Using 3/4 inch wrench to hold bulkhead elbow (C) and 1 inch wrench install washer (D), lockwasher (E), and nut (F) on bulkhead elbow (C).

4. Using 3/4 inch wrench, turn bulkhead elbow (C) until alined with hose assembly (G). Tighten nut (F).

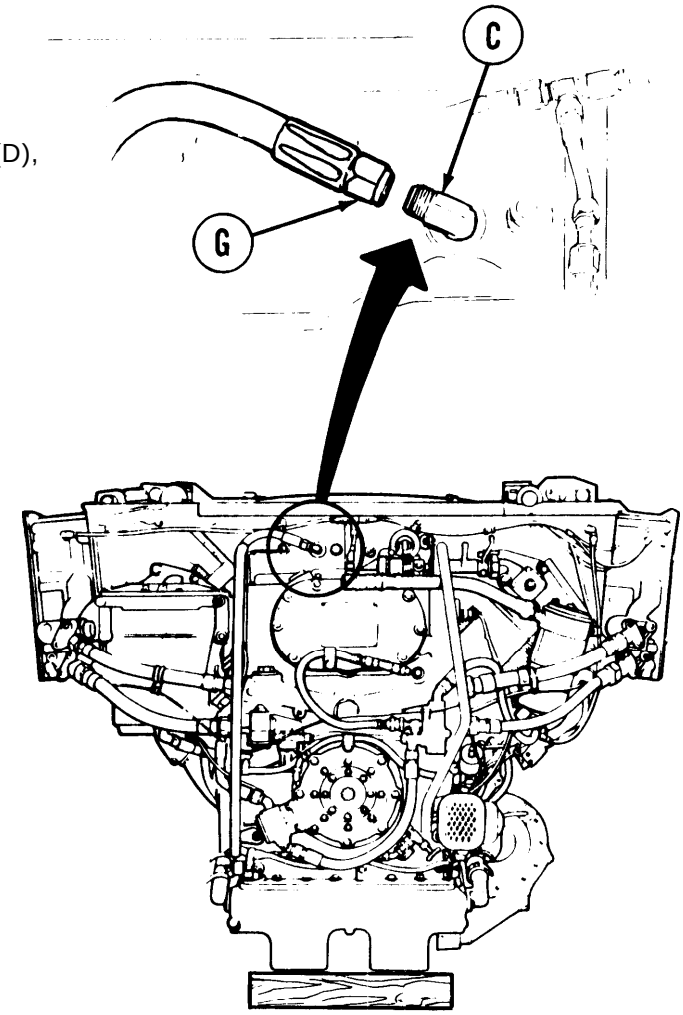

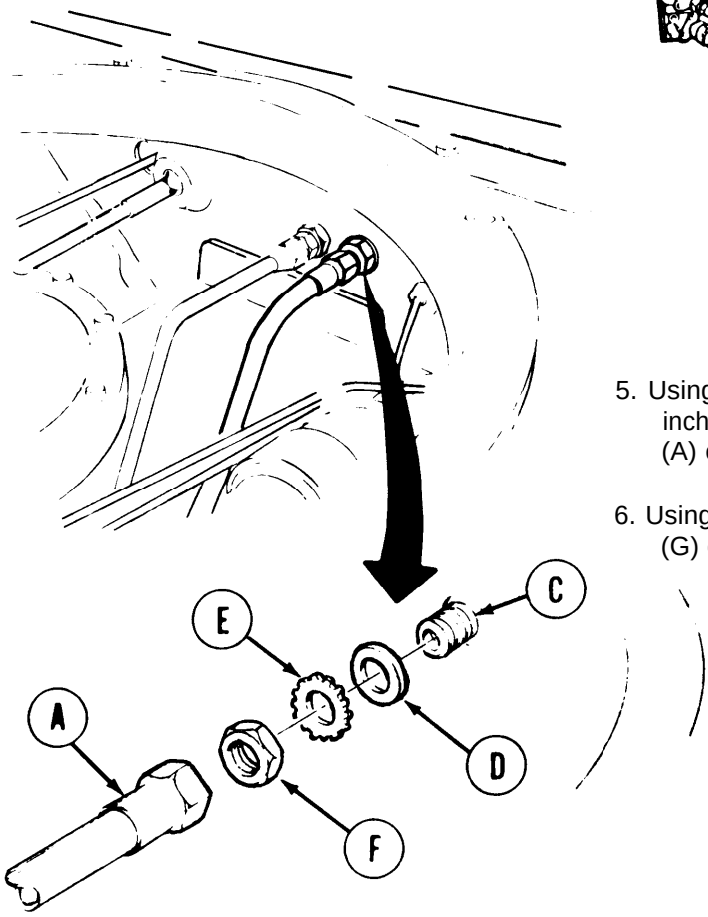

5. Using 1 inch wrench to hold nut (F) and 7/8 inch open end wrench, install tube assembly (A) on bulkhead elbow (C).

6. Using 7/8 inch wrench, install hose assembly (G) on bulkhead elbow (C).

Go on to Sheet 5

TA248156

TUBE ASSEMBLY (FUEL INJECTION PUMP INLET TO BULKHEAD ELBOW) REPLACEMENT (Sheet 5 of 5)

7. Using fingers, install two tube clamps (H) on tube assembly (A).

8. Using 3/8 inch socket and 5/16 inch wrench, install two screws and self-locking nuts (J) through tube clamps (H).

9. Install cooling fans (page 9-57).

10. Install ground hop kit (page 5-27).

11. Perform powerplant test run (page 5-30).

12. Disconnect ground hop kit (page 5-40).

13. Install powerplant (page 5-14).

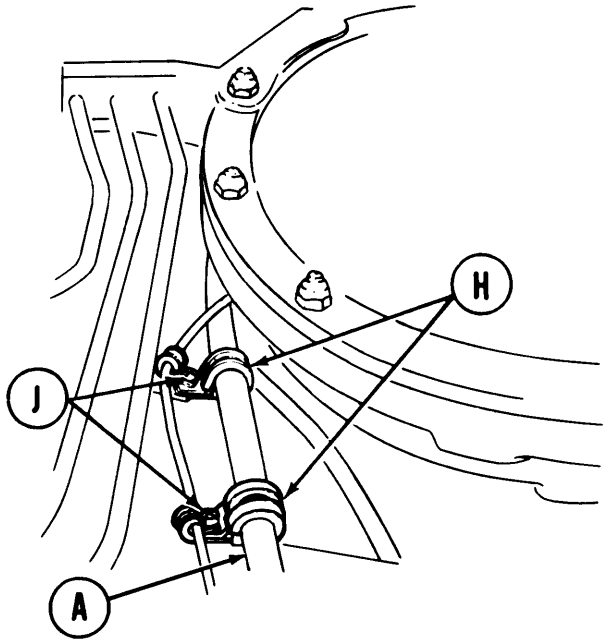

End of Task

TA248157

WATER SEPARATOR FUEL FILTER OUTLET HOSE ASSEMBLY REPLACEMENT (Sheet 1 of 3)

TOOLS: 9/16 in. combination box and open end wrench
7/8 in. combination box and open end wrench

SPECIAL TOOLS: Ground hop kit (Item 31, Chapter 3, Section I)

SUPPLIES: Rags (Item 65, Appendix D)
Sealing compound (Item 27, Appendix D)
Drain pan
Dry cleaning solvent (Item 55, Appendix D)
Gloves (Item 69, Appendix D)
Goggles (Item 70, Appendix D)

PRELIMINARY PROCEDURES: Remove powerplant (page 5-2)
Drain fuel-water separator (page 7-21, steps 1 thru 6)

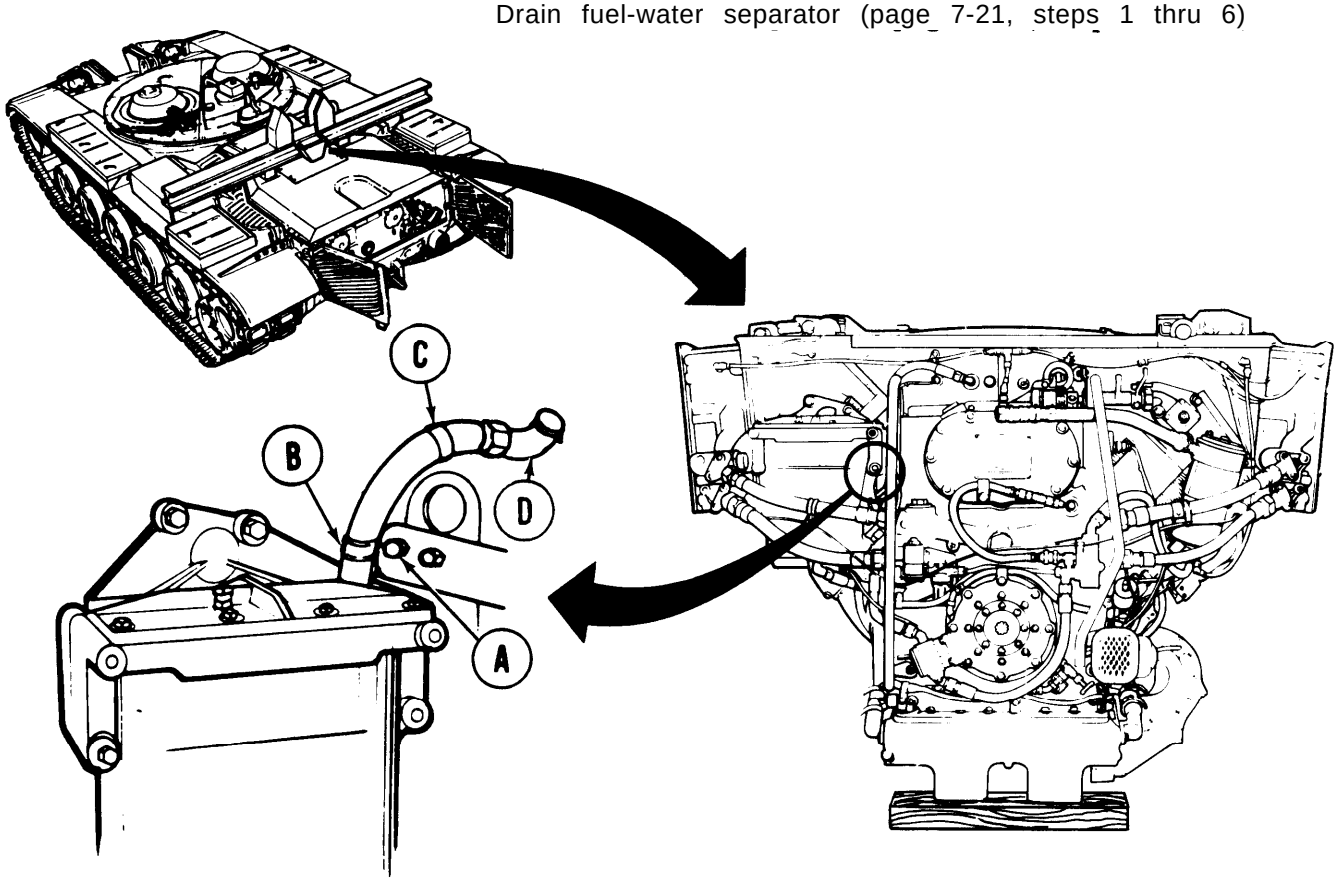

REMOVAL:

1. Using 9/16 inch wrench, remove self-locking nut (A) and hose clamp (B) from hose assembly (C).

2. Using 7/8 inch wrench, remove hose assembly (C) from bulkhead elbow (D).

NOTE

Use suitable container to catch fuel spillage whenever any fuel line or fitting is loosened or removed. Use cloth to wipe any spillage. Discard cloth and drained fuel in accordance with local procedures.

Go on to Sheet 2

TA248158

WATER SEPARATOR FUEL FILTER OUTLET HOSE ASSEMBLY REPLACEMENT (Sheet 2 of 3)

3. Using 7/8 inch wrench, remove hose assembly (C) from elbow (E) of water separator fuel filter (F).

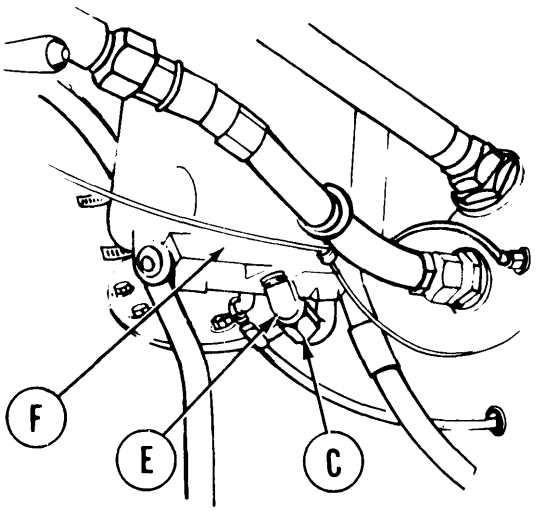

CLEANING AND INSPECTION:

WARNING

Dry cleaning solvent P-D-680 is toxic and flammable. To prevent personal injury, wear protective goggles and gloves and use only in a well-ventilated area. Avoid contact with skin, eyes, and clothes and don't breathe vapors. Do not use near open flame or excessive heat. The flash point for Type #1 Dry Cleaning Solvent is 100°F (38°C) and for Type #2 is 138°F (50°C). If you become dizzy while using cleaning solvent, get fresh air immediately and get medical aid. If contact with eyes is made, wash your eyes with water and get medical aid immediately.

1. Using clean cloth and solvent, clean hose clamp thoroughly.
2. Inspect hose clamp for wear or damage.
3. Inspect hose for cracks or tears.
4. Inspect bulkhead elbow and water separator fuel filter outlet elbow for stripped threads.
5. Replace defective parts as required.

INSTALLATION:

1. Using hands, install hose assembly (A) on bulkhead elbow (B).
2. Using 7/8 inch wrench, tighten nut (C) of hose assembly (A) on bulkhead elbow (B).

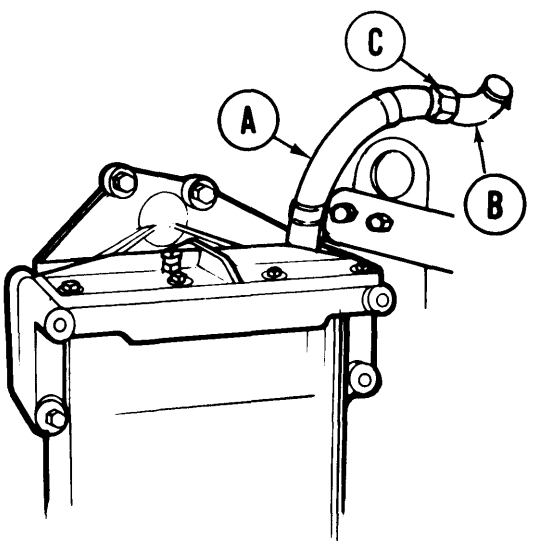

Go on to Sheet 3

TA248159

WATER SEPARATOR FUEL FILTER OUTLET HOSE ASSEMBLY REPLACEMENT (Sheet 3 of 3)

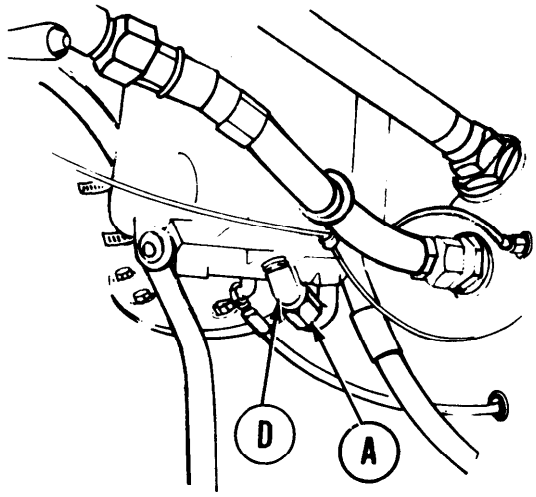

3. Coat threads of water separator fuel filter outlet elbow (D) with sealing compound.

4. Using hands, install hose assembly (A) on water separator fuel filter outlet elbow (D).

5. Using 7/8 inch wrench, tighten nut of hose assembly (A) on water separator fuel outlet elbow (D).

6. Using hands, install clamp (E) on hose assembly (A).

7. Using hands, install clamp (E) and hose assembly (A) on mounting stud (F).

8. Using 9/16 inch wrench, install self-locking nut (G) on mounting stud (F).

9. Install ground hop kit (page 5-27).

10. Using ground hop kit, perform powerplant test run (page 5-25).

11. Disconnect ground hop kit (page 5-40).

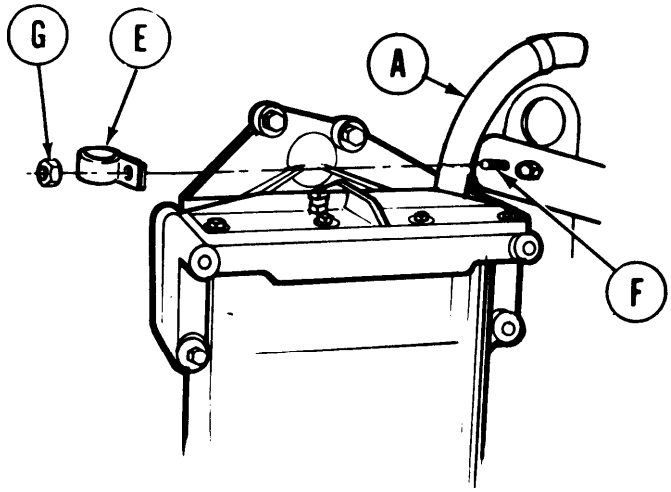

End of Task

TA248160

ENGINE FUEL PUMP REPLACEMENT (Sheet 1 of 3)

TOOLS: 1/2 in. combination box and open end wrench
7/8 in. combination box and open end wrench
Pipe wrench

SPECIAL TOOLS: Ground hop kit (Item 31, Chapter 3, Section I)

SUPPLIES: Rags (Item 65, Appendix D)
Dry cleaning solvent (Item 55, Appendix D)
Sealing compound (Item 27, Appendix D)
Gasket
Drain pan
Gloves (Item 69, Appendix D)
Goggles (Item 70, Appendix D)

REFERENCE: TM 5-5420-202-10

PRELIMINARY PROCEDURE: Remove powerplant (page 5-2)

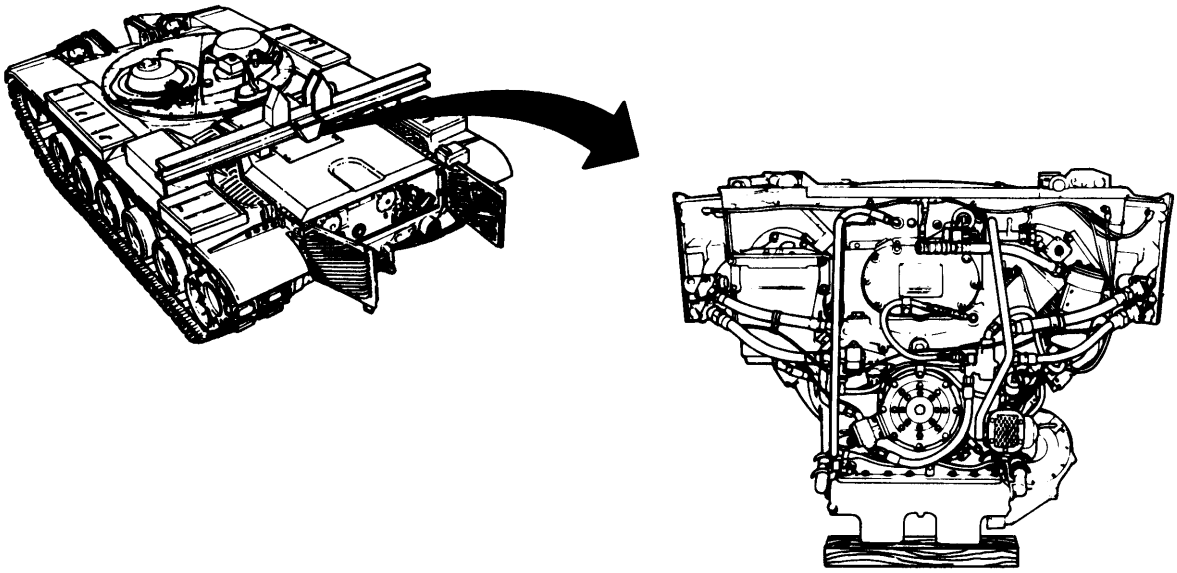

Go on to Sheet 2

TA248161

ENGINE FUEL PUMP REPLACEMENT (Sheet 2 of 3)

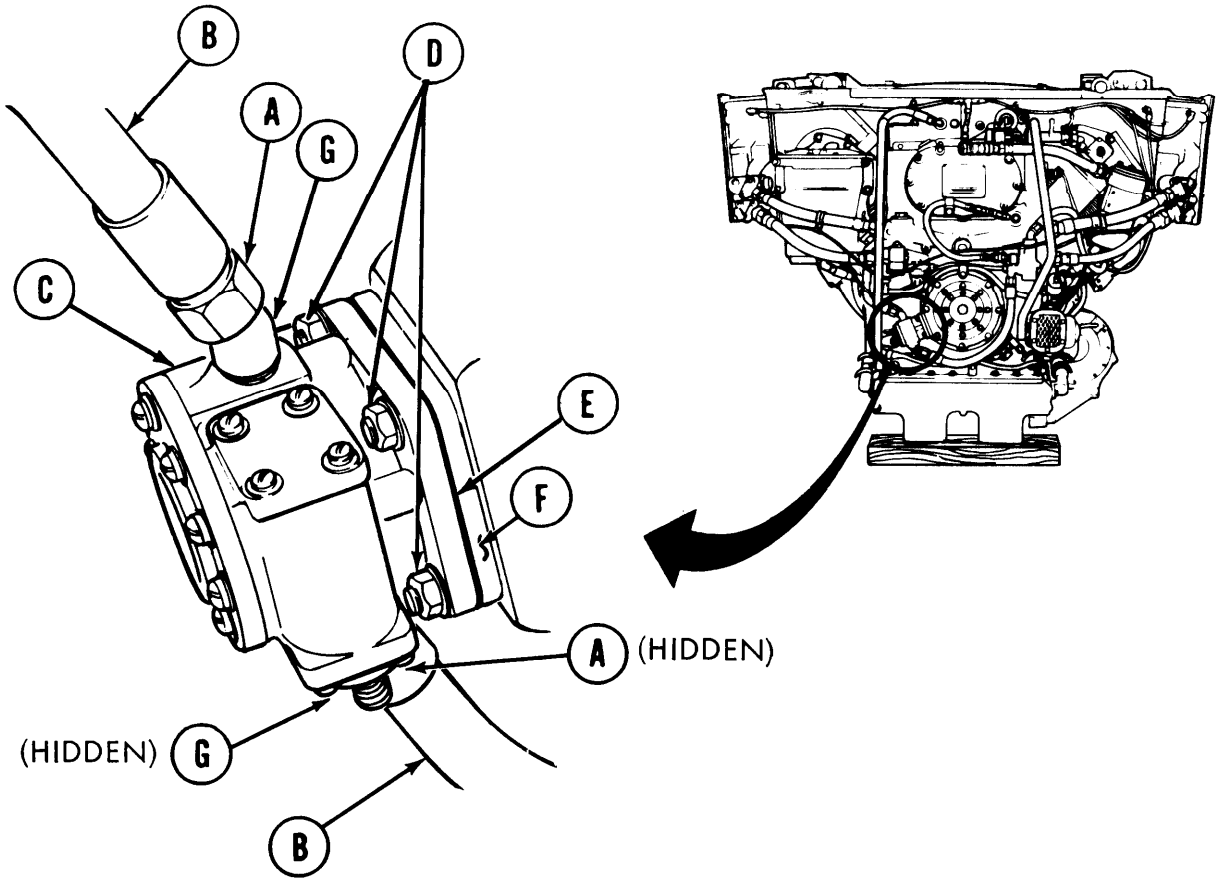

REMOVAL:

1. Using 7/8 inch wrench, loosen two nuts (A) (one hidden) securing two hose assemblies (B) to fuel pump (C).

2. Remove two hose assemblies (B) from fuel pump (C).

3. Using 1/2 inch wrench, remove four nuts and flat washers (D) securing fuel pump (C) and gasket (E) to power takeoff adapter (F).

4. Remove fuel pump (C) and gasket (E) from power takeoff adapter (F). Throw gasket (E) away.

5. Using pipe wrench, remove two elbows (G) (one hidden) from fuel pump (C).

CLEANING AND INSPECTION:

WARNING

Cleaning agent specified is flammable. Use only in well ventilated areas. Keep away from flames, sparks, or heat. Do not smoke while using. Prevent contact with eyes, mouth, and/or skin. Wear rubber gloves when performing cleaning procedures.

1. Using dry cleaning solvent and cloth, clean all removed parts.

Go on to Sheet 3

TA248162

ENGINE FUEL PUMP REPLACEMENT (Sheet 3 of 3)

2. Using cloth, wipe all removed parts dry.

3. Inspect fuel pump gear shaft for excessive wear or break. If defective, replace fuel pump.

4. Inspect fittings and mounting hardware for cracks, wear, or thread damage. Replace parts if required.

Installation:

NOTE

Coat all male threads of fittings with sealing compound before installing.

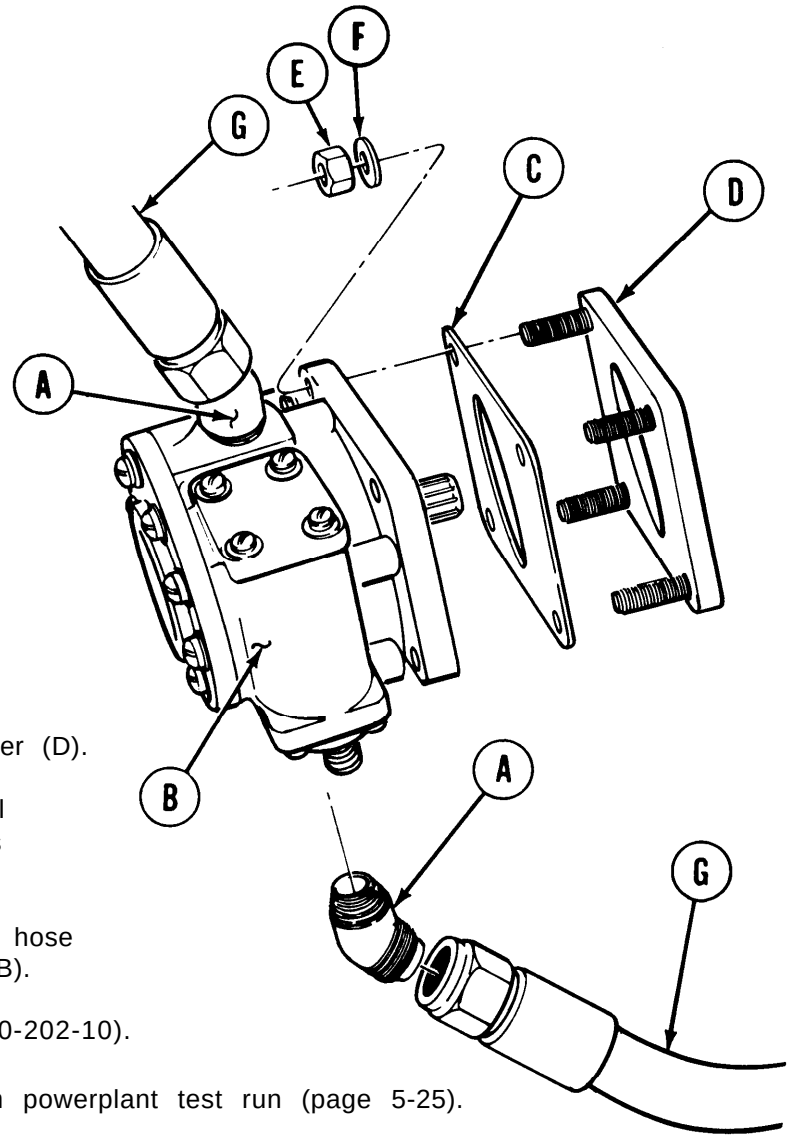

1. Using pipe wrench, install two elbows (A) to fuel pump (B).

2. Install new gasket (C) to adapter (D).

3. Mount fuel pump (B) to adapter (D).

4. Using 1/2 inch wrench, install four nuts (E) and flat washers (F) to fuel pump (B).

5. Using 7/8 inch wrench, install hose assemblies (G) to fuel pump (B).

6. Service fuel tanks (TM 5-5420-202-10).

7. Using ground hop kit, perform powerplant test run (page 5-25).

8. Install powerplant (page 5-14).

End of Task

TA248163

PRIMARY FUEL FILTER OUTLET TO FUEL BACKFLOW VALVE HOSE ASSEMBLY REPLACEMENT (Sheet 1 of 2)

TOOLS: 13/16 in. combination box and open end wrench
7/8 in. combination box and open end wrench

SUPPLIES: Sealing compound (Item 27, Appendix D)
Container
Rags (Item 65, Appendix D)

PRELIMINARY PROCEDURE: Remove powerplant (page 5-2)

NOTE

Use container and rags to catch fuel in line and filter.

REMOVAL:

1. Using 13/16 inch wrench on adapter (A) of fuel backflow valve (B) and 7/8 inch wrench on hose assembly (C), remove hose assembly (C) from adapter (A).

2. Using 7/8 inch wrench, remove hose assembly (C) from elbow (D) of primary filter (E).

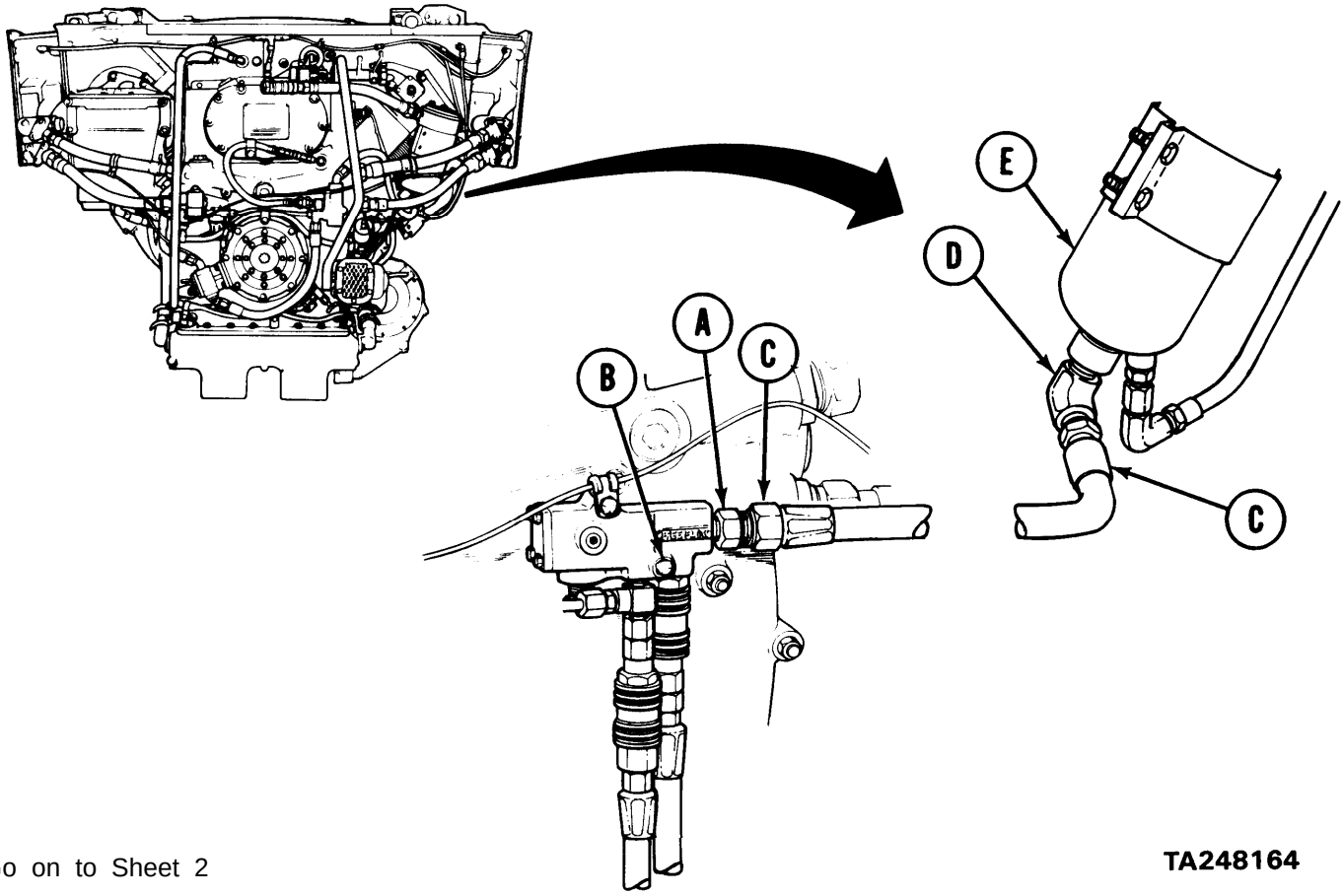

Go on to Sheet 2

TA248164

PRIMARY FUEL FILTER OUTLET TO FUEL BACKFLOW VALVE HOSE ASSEMBLY REPLACEMENT (Sheet 2 of 2)

INSTALLATION:

1. Coat threads of elbow (A) on primary fuel filter (B) with sealing compound.
2. Using 7/8 inch wrench, install hose assembly (C) on elbow (A) of primary fuel filter (B).
3. Coat threads of adapter (D) on fuel backflow valve (E) with sealing compound.
4. Using 7/8 inch wrench, install hose assembly (C) on adapter (D) of fuel backflow valve (E).
5. Perform engine fuel leak test (page 5-38).
6. Install powerplant (page 5-14).

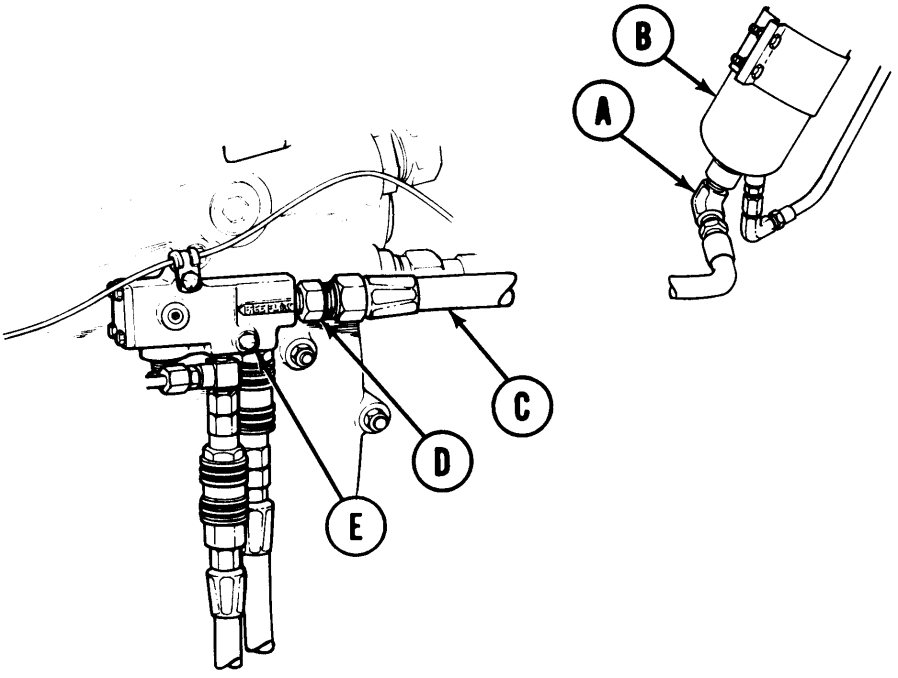

End of Task

TA248165

FUEL LINE INSULATOR REPLACEMENT (Sheet 1 of 10)

PROCEDURE INDEX

PROCEDURE	PAGE
Removal	7-42
Installation	7-47

TOOLS: 1/2 in combination box and open end wrench (2 required)
1/2 in. socket with 3/8 in. drive
5 in. extension with 3/8 in. drive
Ratchet with 3/8 in. drive
Torque wrench with 3/8 in. drive (0-200 lb-in) (0-23 N m)

SPECIAL TOOLS: 1/2 in. crowfoot wrench with 3/8 in. drive

PRELIMINARY PROCEDURES:
Remove top deck (page 16-21)
Remove powerplant (page 5-2)
Remove cooling fan shroud (page 9-47)
Remove engine access cover (right bank) (page 6-107)
Remove engine access cover (left bank) (page 6-1 12)

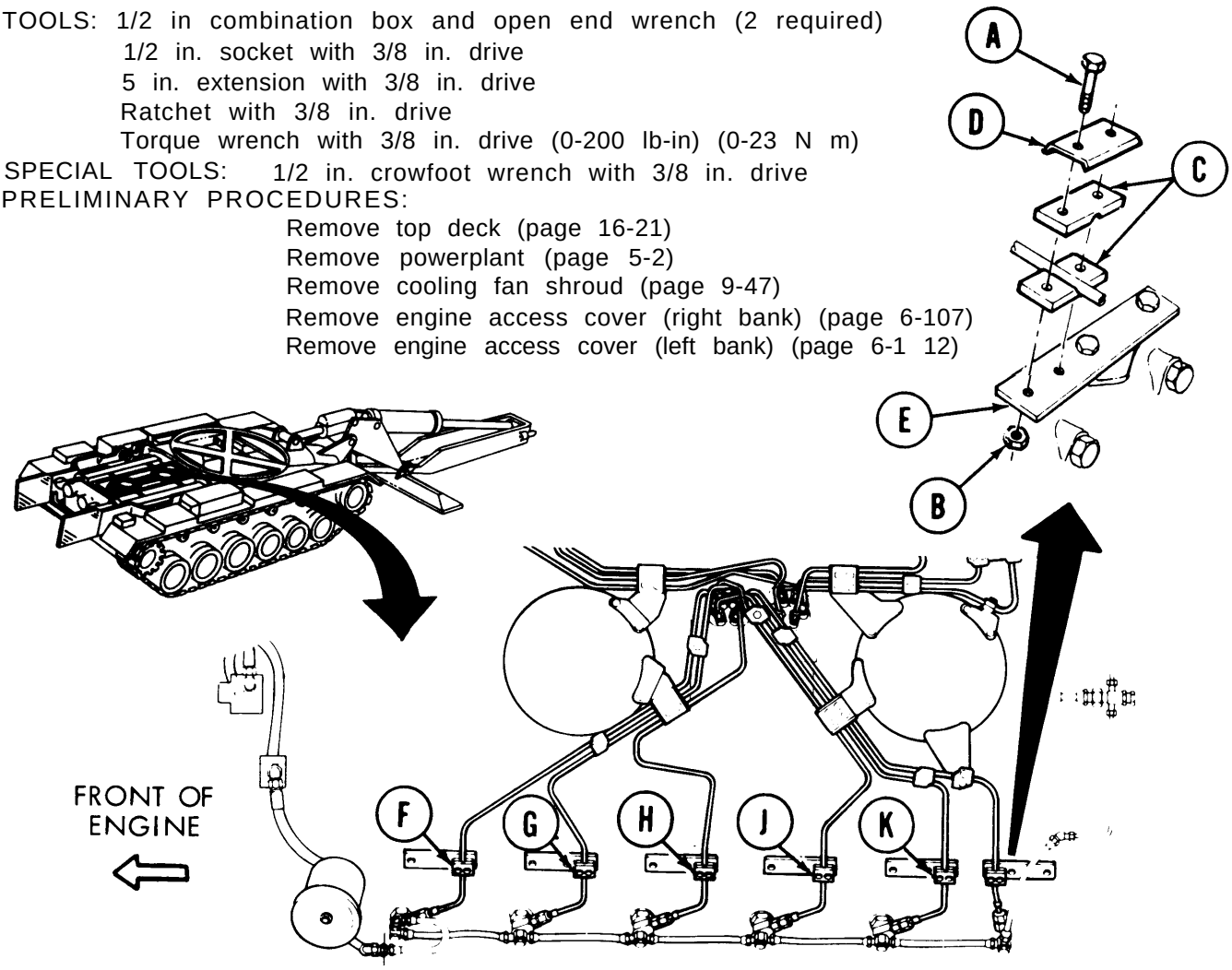

REMOVAL:

1. Using two 1/2 inch wrenches, remove two bolts (A) and nuts (B) holding insulators (C) and plate (D) to support (E). Remove insulators (C) and plate (D).

2. Using two 1/2 inch wrenches, remove insulators and plate from support (F), (G), (H), (J), and (K), same as step 1 above.

Go on to Sheet 2

TA248166

FUEL LINE INSULATOR REPLACEMENT (Sheet 2 of 10)

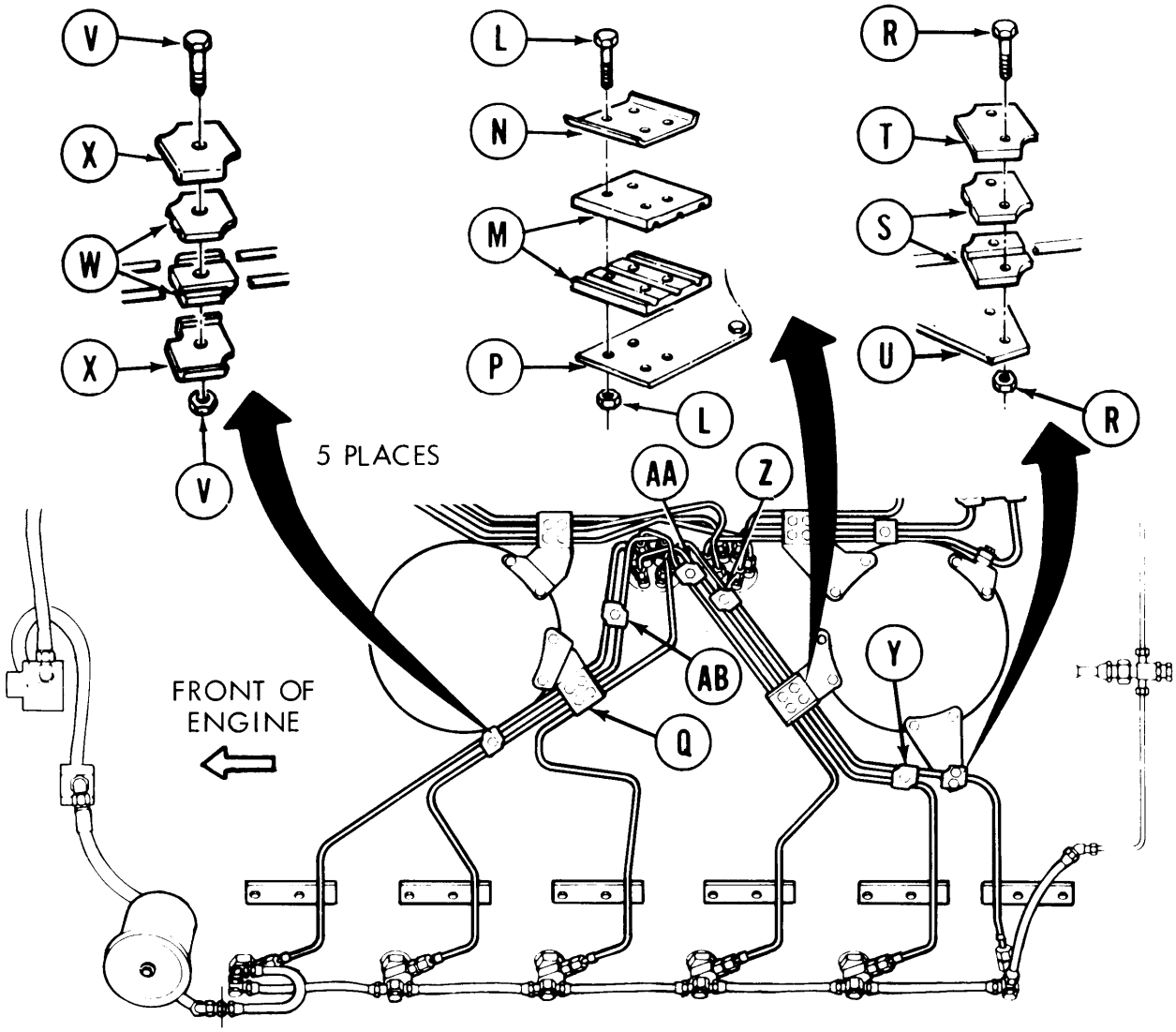

3. Using 1/2 inch socket, extension, and 1/2 inch wrench, remove four bolts and nuts (L) holding insulators (M) and plate (N) to bracket (P). Remove insulators (M) and plate (N).

4. Remove insulators and plate from bracket (Q), same as step 3 above.

5. Using 1/2 inch socket and 1/2 inch wrench, remove two bolts and nuts (R) holding insulators (S) and plate (T) to support (U). Remove insulators (S) and plate (T).

6. Using 1/2 inch socket and 1/2 inch wrench, remove bolt and nut (V) holding insulators (W) and plates (X) to fuel lines. Remove insulators (W) and plates (X).

7. Remove insulators and plates located at (Y), (Z), (AA), and (AB), same as step 6 above.

Go on to Sheet 3

TA248167

FUEL LINE INSULATOR REPLACEMENT (Sheet 3 of 10)

8. Using two 1/2 inch wrenches, remove two bolts and nuts (AC) holding insulators (AD) and plate (AE). Remove insulators (AD) and plate (AE).

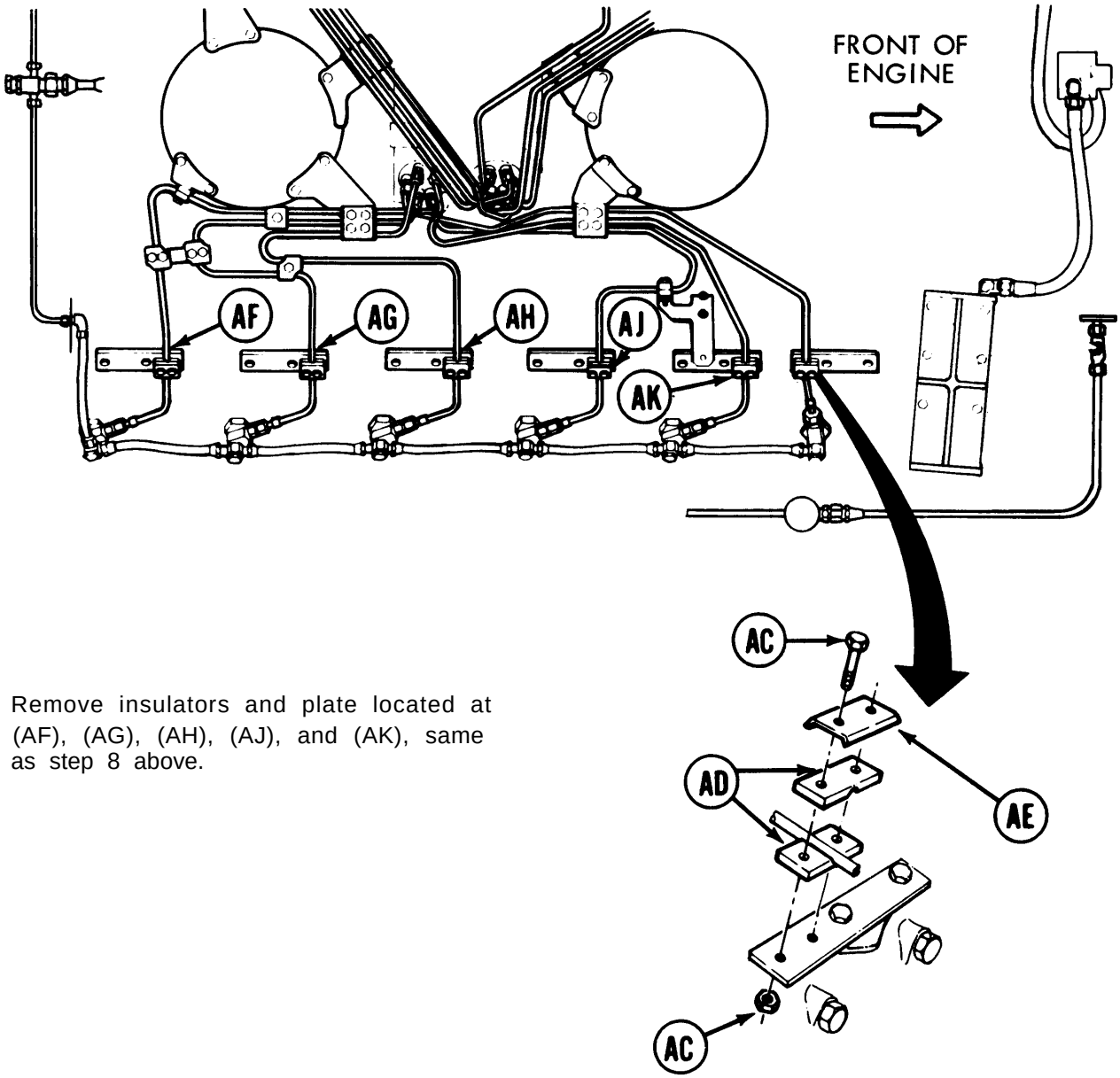

9. Remove insulators and plate located at (AF), (AG), (AH), (AJ), and (AK), same as step 8 above.

Go on to Sheet 4

TA248168

FUEL LINE INSULATOR REPLACEMENT (Sheet 4 of 10)

10. Using 1/2 inch socket and 1/2 inch wrench, remove eight bolts and nuts (AL) holding insulators (AM) and plates (AN) to two brackets (AP). Remove insulators (AM) and plates (AN).

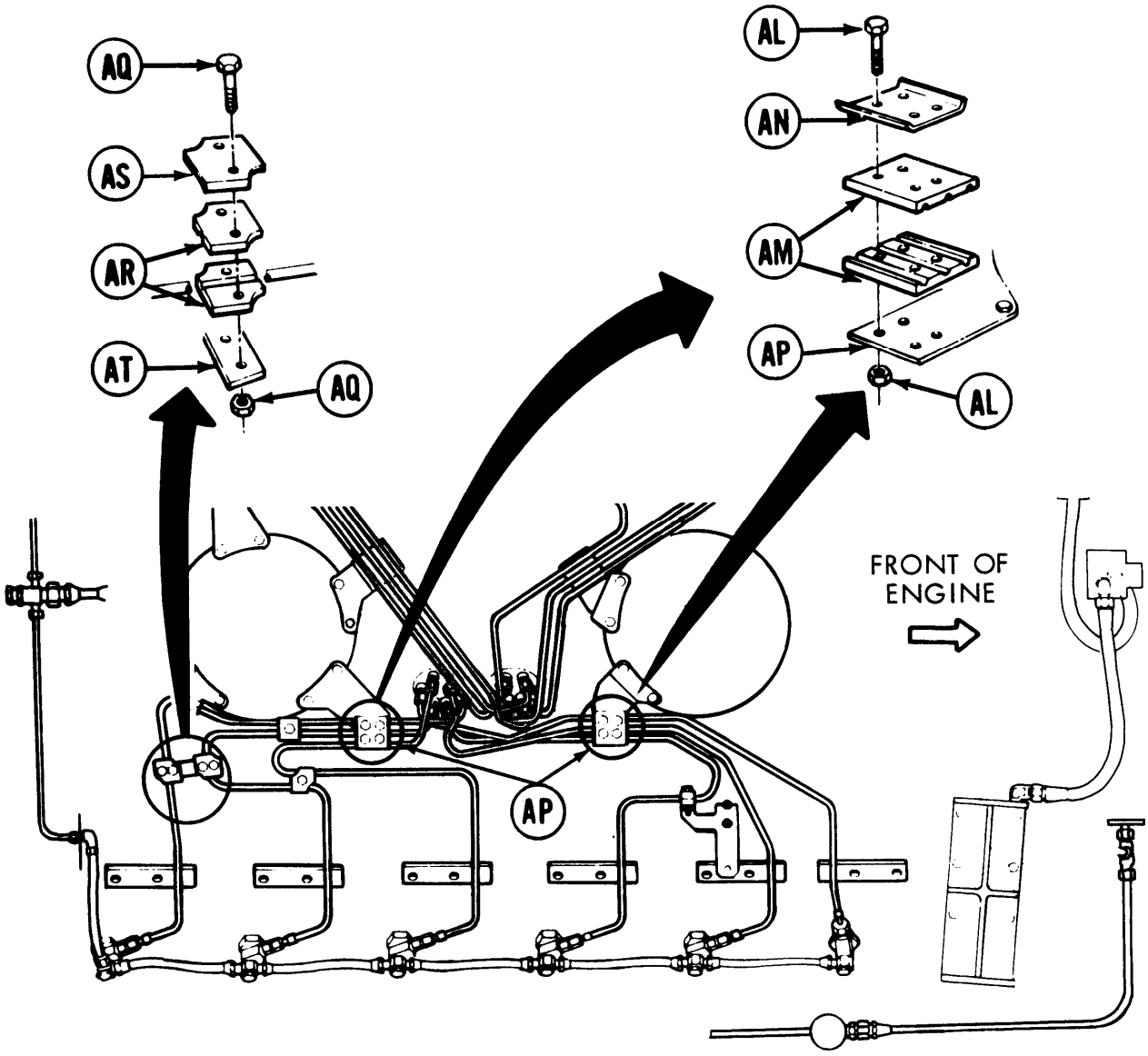

11. Using 1/2 inch socket and 1/2 inch wrench, remove four bolts and nuts (AQ) holding four insulators (AR) and two plates (AS) to bracket (AT). Remove insulators (AR) and plates (AS) and bracket (AT).

Go on to Sheet 4

TA248169

FUEL LINE INSULATOR REPLACEMENT (Sheet 5 of 10)

12. Using socket and wrench, remove two bolts (AU) holding plate (AV) and insulators (AW) to bracket (AX). Remove insulators (AW) and plate (AV).

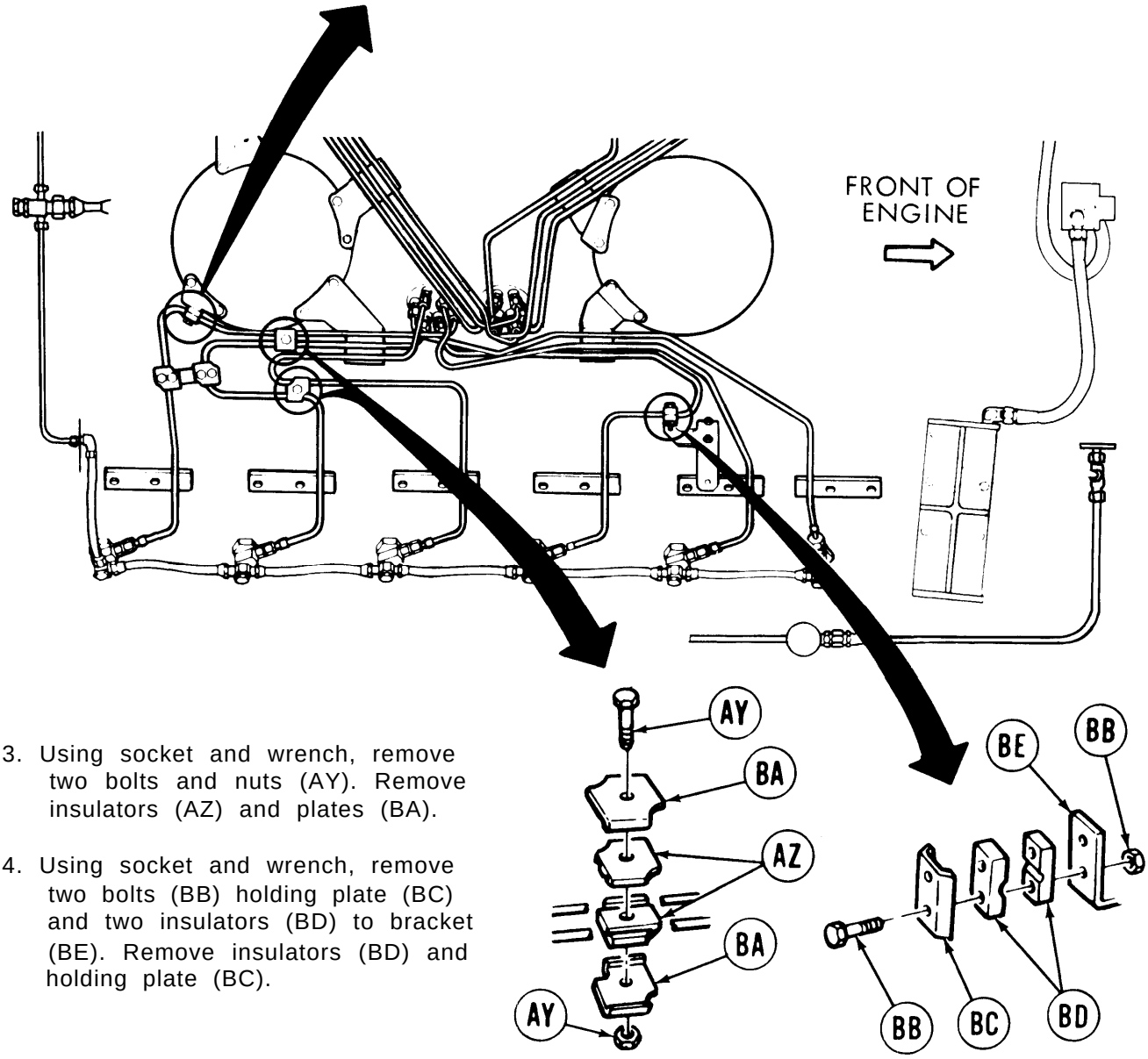

13. Using socket and wrench, remove two bolts and nuts (AY). Remove insulators (AZ) and plates (BA).

14. Using socket and wrench, remove two bolts (BB) holding plate (BC) and two insulators (BD) to bracket (BE). Remove insulators (BD) and holding plate (BC).

Go on to Sheet 6

TA248170

FUEL LINE INSULATOR REPLACEMENT (Sheet 6 of 10)

INSTALLATION:

1. Position two insulators (A) and plate (B) onto fuel lines and bracket (C).

2. Using 1/2 inch socket and 1/2 inch wrench, install two bolts (D) and nuts (E) securing plate (B) and insulators (A) to bracket (C).

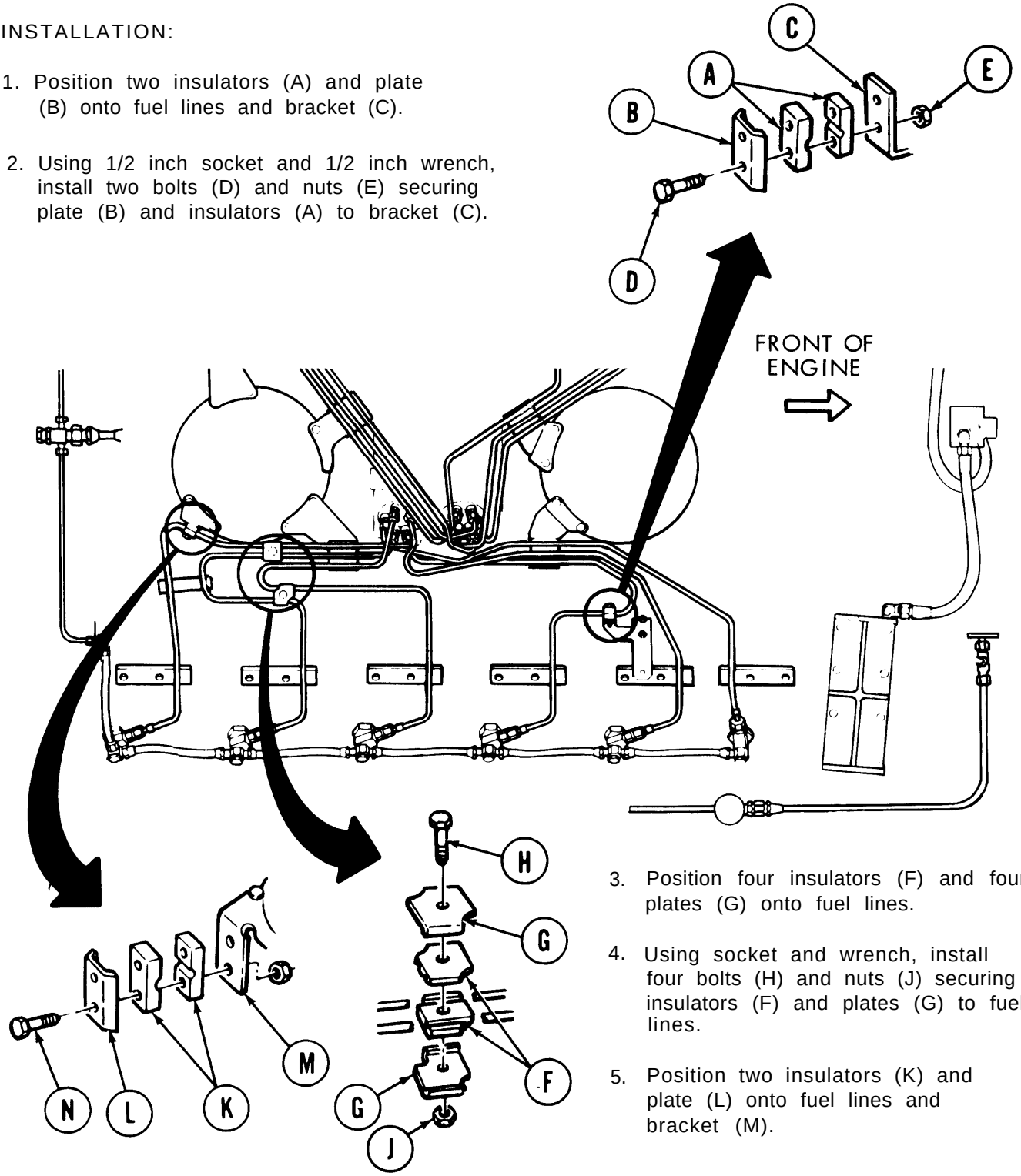

3. Position four insulators (F) and four plates (G) onto fuel lines.

4. Using socket and wrench, install four bolts (H) and nuts (J) securing insulators (F) and plates (G) to fuel lines.

5. Position two insulators (K) and plate (L) onto fuel lines and bracket (M).

6. Using two wrenches, install two bolts (N) securing insulators (K) and plate (L) to fuel lines and bracket (M).

Go on to Sheet 7

TA248171

FUEL LINE INSULATOR REPLACEMENT (Sheet 7 of 10)

7. Position four insulators (P), two plates (Q), and bracket (R) onto fuel lines.

8. Using socket and wrench, install four bolts (S) and nuts (T) securing insulators, plates, and bracket to fuel lines.

9. Using torque wrench, torque four bolts (S) to 160-190 lb-in (18-21 N m).

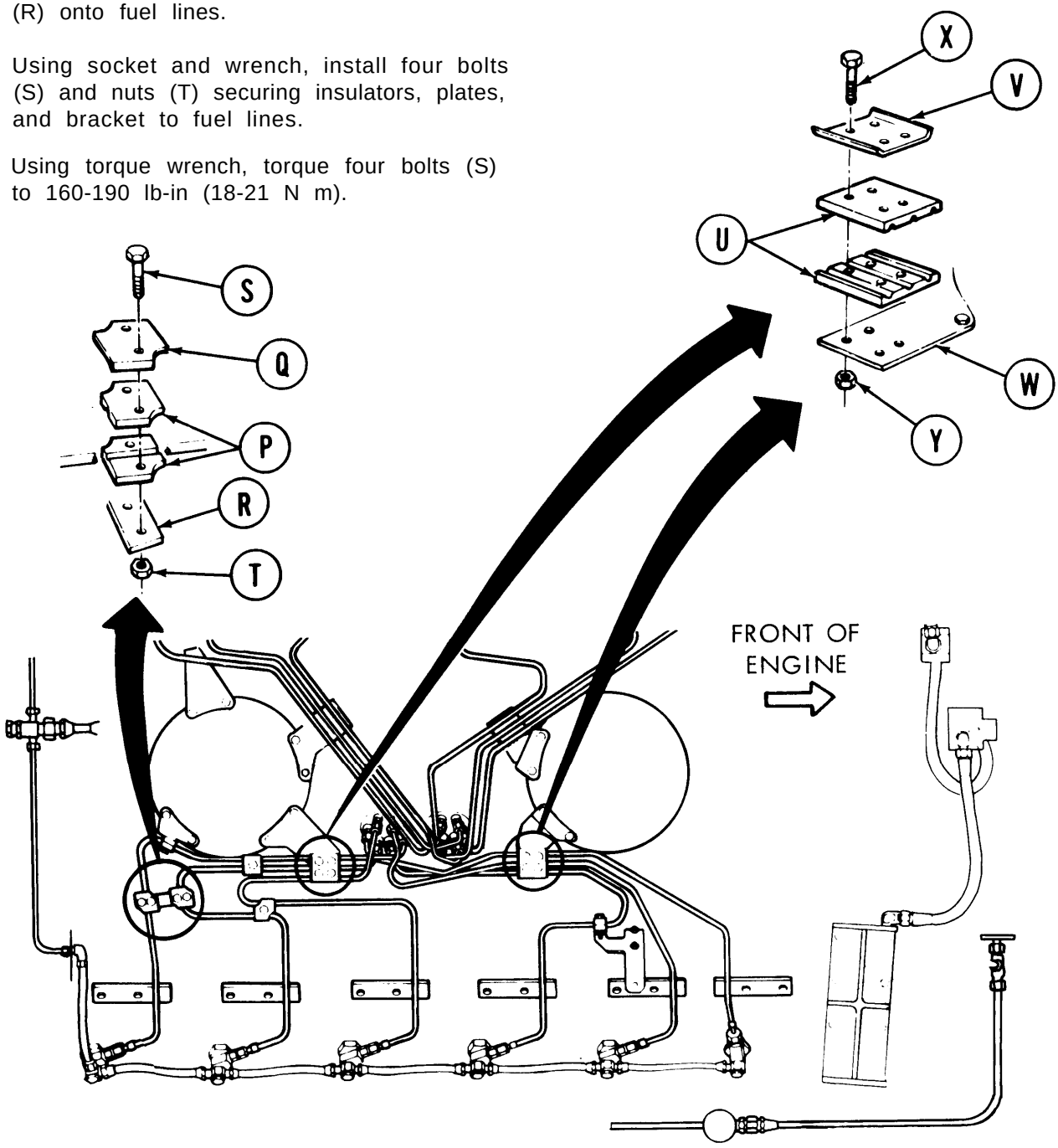

10. Position four insulators (U) and two plates (V) onto brackets (W).

11. Using 1/2 inch socket and 1/2 inch wrench, install eight bolts (X) and nuts (Y) securing insulators and plates to brackets.

12. Using torque wrench, torque eight bolts (X) to 160-190 lb-in (18-21 N m).

Go on to Sheet 8

TA248172

FUEL LINE INSULATOR REPLACEMENT (Sheet 8 of 10)

13. Position insulators (Z) and plate (AA) onto bracket (AB).

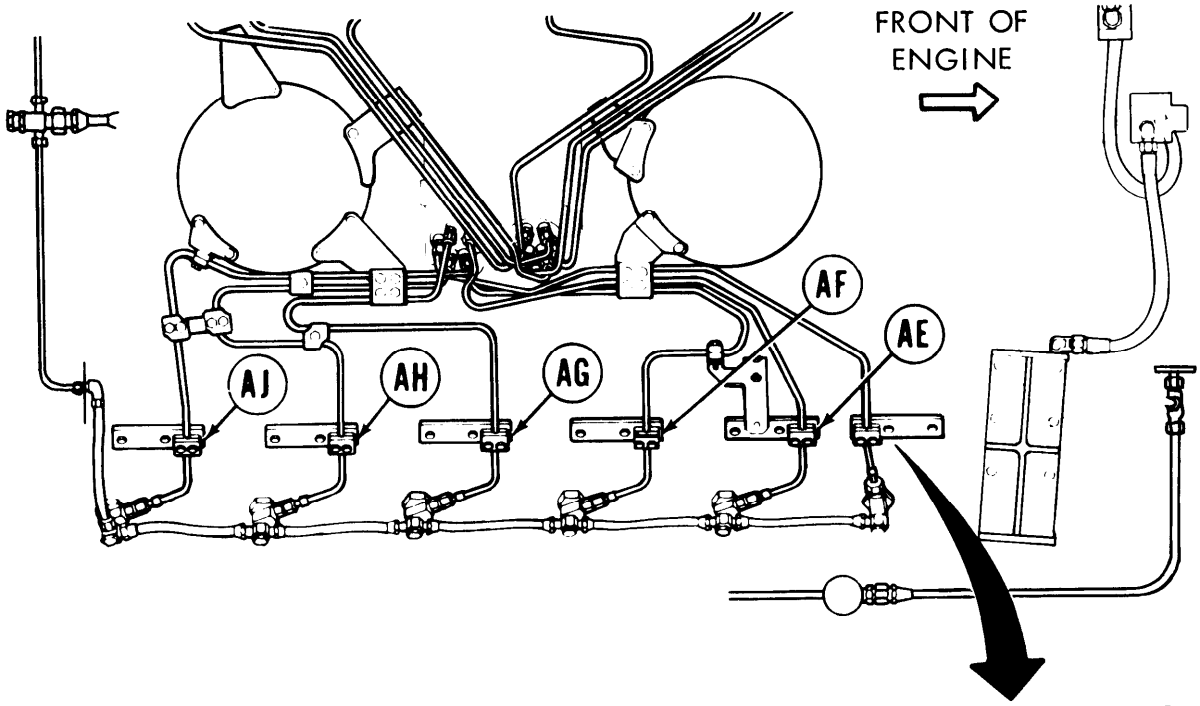

14. Using 1/2 inch socket and 1/2 inch wrench, install two bolts (AC) and nuts (AD) securing insulators and plate to bracket.

15. Using torque wrench, torque two bolts (AC) to 160-190 lb-in (18-21 N m).

16. Install insulators and plate on bracket (AE), (AF), (AG), (AH), and (AJ), the same as steps 13, 14 and 15 above.

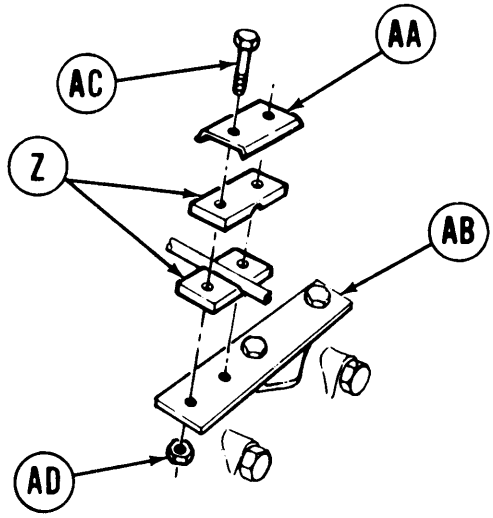

Go on to Sheet 9

TA248173

FUEL LINE INSULATOR REPLACEMENT (Sheet 9 of 10)

17. Position insulators (AK) and plates (AL) onto fuel lines.

18. Using 1/2 inch socket and 1/2 inch wrench, install bolt (AM) and nut (AN) securing insulators (AK) and plates (AL) to fuel lines.

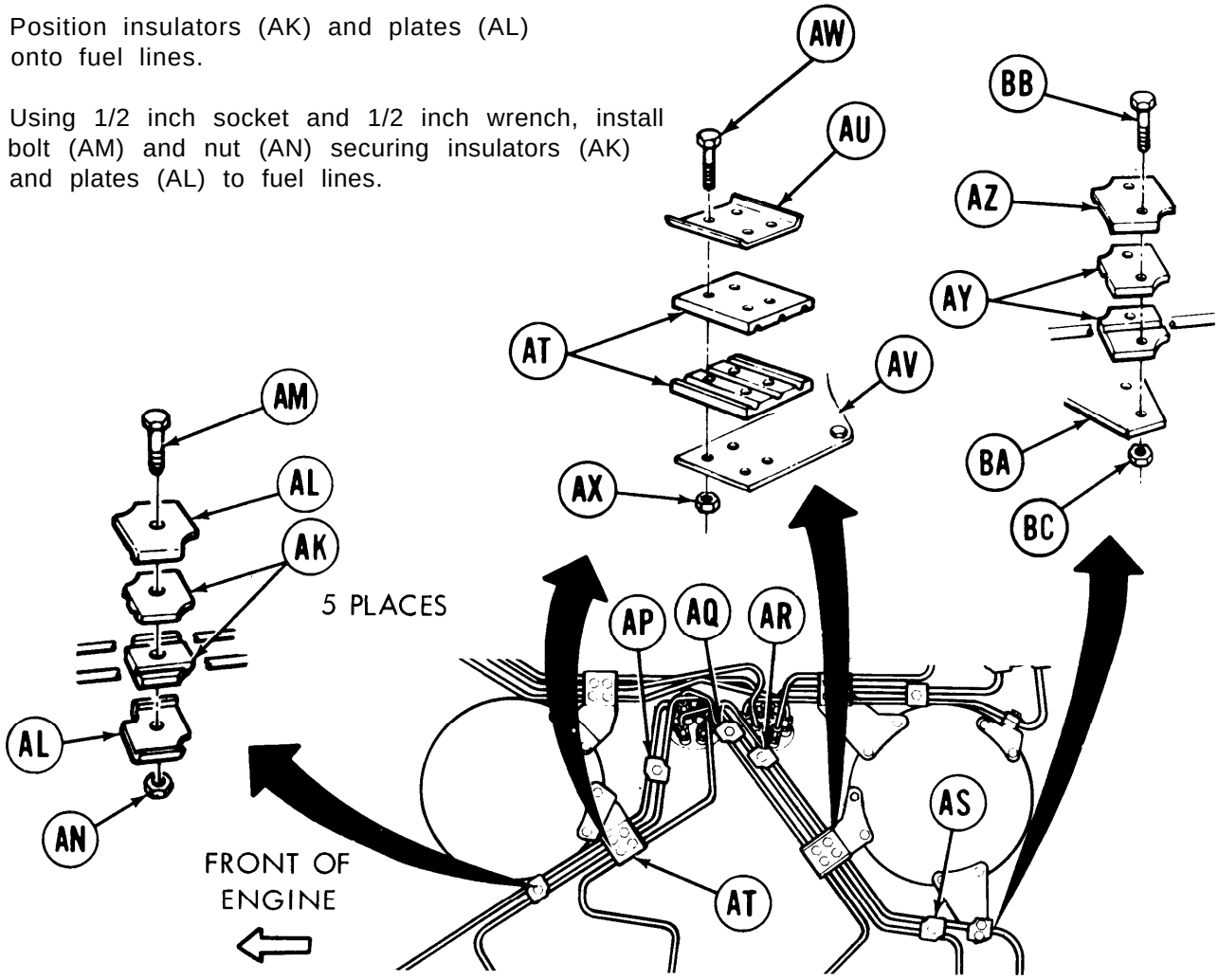

19. Using torque wrench, torque bolt (AM) to 160-190 lb-ft (18-21 N m).

20. Install insulators and plates located at (AP), (AQ), (AR), and (AS), the same as steps 17, 18, and 19 above.

21. Position four insulators (AT) and two plates (AU) onto two brackets (AV).

22. Using 1/2 inch socket, extension, and 1/2 inch wrench, install eight bolts (AW) and nuts (AX) securing insulators, plates and fuel lines to brackets.

23. Using torque wrench, torque bolts (AW) to 160-190 lb-in (18-21 NŽm).

24. Position insulators (AY) and plate (AZ) onto bracket (BA).

25. Using 1/2 inch socket and 1/2 inch wrench, install two bolts (BB) and nuts (BC) securing insulators, plate and fuel lines to bracket.

26. Using torque wrench, torque bolts (BB) to 160-190 lb-in (18-21 NŽm).

Go on to Sheet 10

TA248174

FUEL LINE INSULATOR REPLACEMENT (Sheet 10 of 10)

27. Position insulators (BD) and plate (BE) onto bracket (BF).

28. Using two 1/2 inch wrenches install two bolts (BG) and nuts (BH) securing insulators, plate, and fuel lines to bracket.

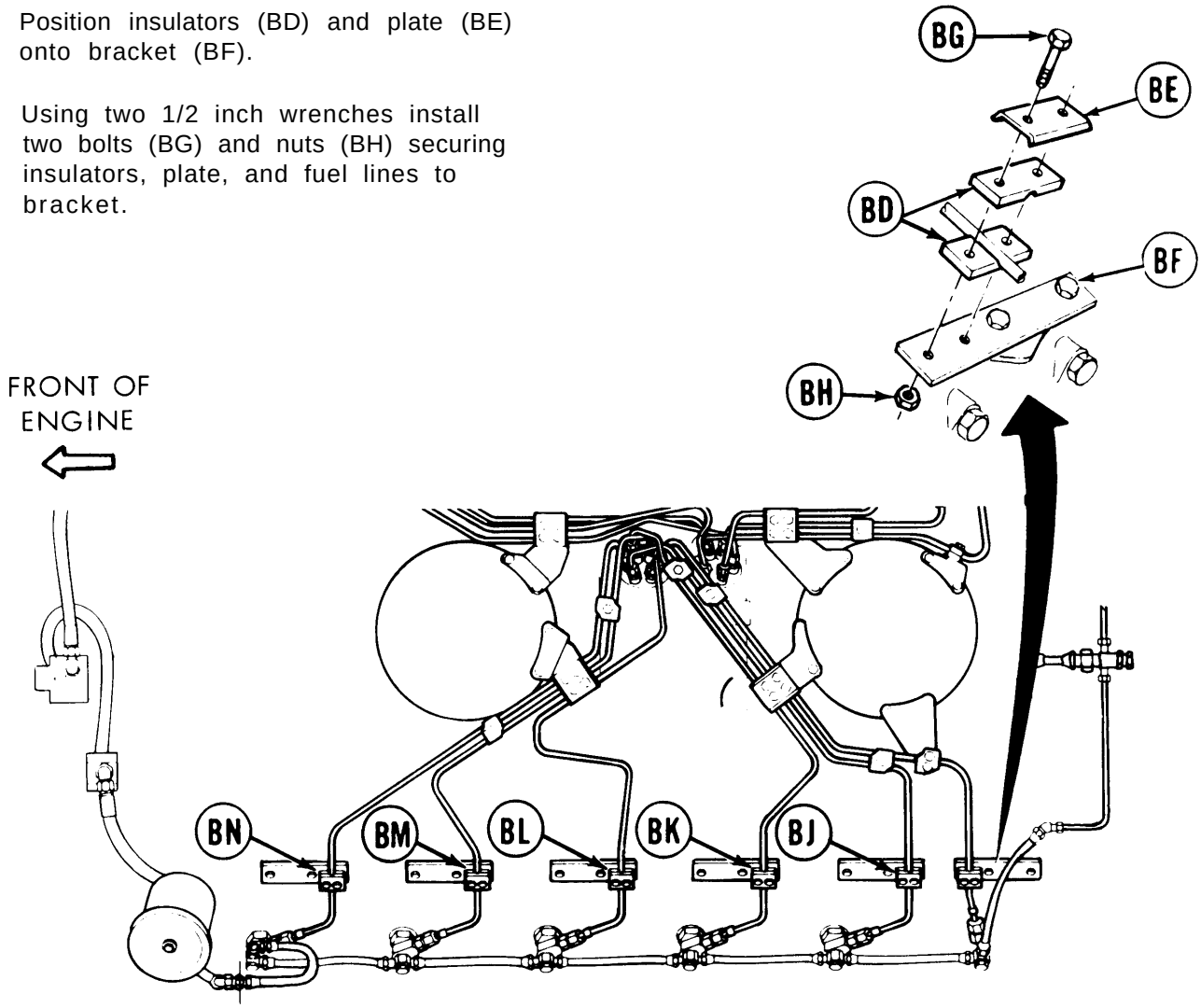

29. Using torque wrench and crowfoot wrench torque bolts (BG) to 160-190 lb-in (18-21 N m).

30. Install insulators and plate on bracket (BJ), (BK), (BL), (BM), and (BN), the same as in steps 21 and 22.

31. Install engine access cover (left bank) (page 6-115).

32. Install engine access cover (right bank) (page 6-110).

33. Install cooling fan shroud (page 9-31).

34. Install powerplant (page 5-14).

35. Install top deck (page 16-23).

End of Task

TA248175

FUEL RETURN LINES REPLACEMENT (Sheet 1 of 10)

PROCEDURE INDEX

PROCEDURE	PAGE
Removal	7-52
Cleaning and Inspection	7-56
Installation	7-57

TOOLS: 7/16 in. combination box and open end wrench
1/2 in. combination box and open end wrench
9/16 in. combination box and open end wrench (two required)
3/4 in. combination box and open end wrench
7/8 in. combination box and open end wrench
15/1 6 in. combination box and open end wrench
3/8 in. socket with 3/8 in. drive
1/2 in. socket with 1/2 in. drive
11/1 6 in. socket with 1/2 in. drive
5 in. extension with 1/2 in. drive
1-1/8 in. open end wrench
Ratchet with 3/8 in. drive
Ratchet with 1/2 in. drive
Flat-tip screwdriver
Drip pan
Vise

SPECIAL TOOLS: Ground hop kit (Item 31, Chapter 3, Section I)

SUPPLIES: Lockwasher

PRELIMINARY PROCEDURES:
Remove powerplant (page 5-2)
Remove cooling fans (page 9-55)
Remove engine access cover (left bank) (page 6-112)
Remove engine access cover (right bank) (page 6-107)

Go on to Sheet 2

FUEL RETURN LINES REPLACEMENT (Sheet 2 of 10)

REMOVAL:

NOTE

Left and right side fuel retrurn lines are removed the same except for fuel return lines (A) and (B) on right side. For left side fuel return lines removal, skip steps 1 thru 4 and go to step 5.

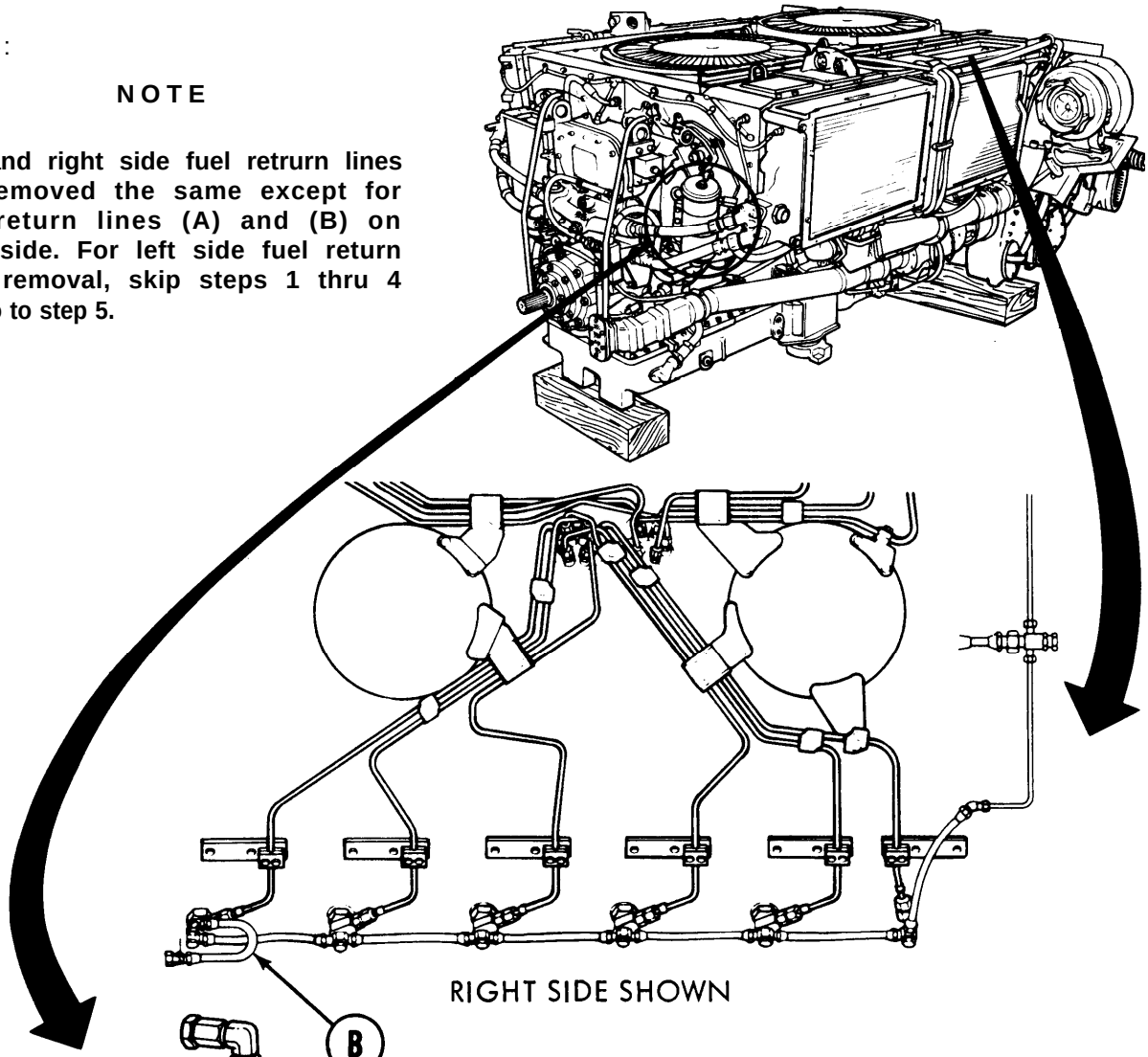

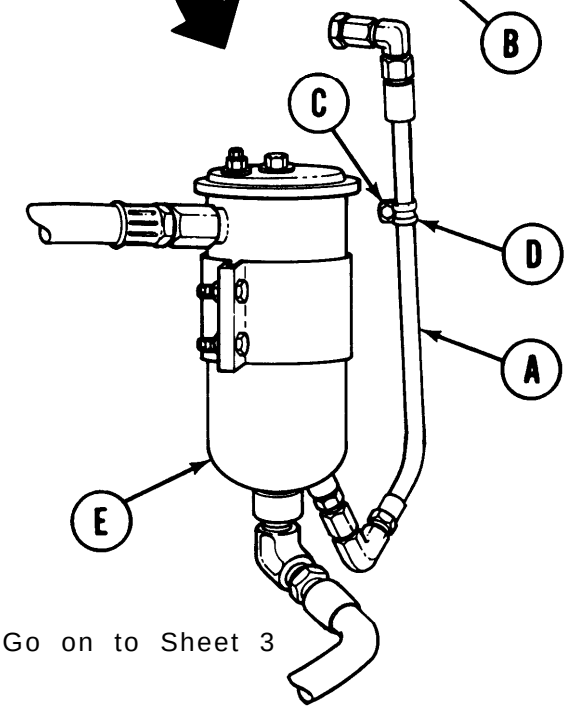

1. Using 1/2 inch socket, remove screw and lockwasher (C) securing clamp (D).
2. Place drip pan under fuel filter (E).
3. Using 9/16 inch wrench, disconnect fuel return line (A) at fuel filter (E) and let fuel drain.
4. Using 9/16 inch wrench, remove fuel return line (A).
5. Remove clamp (D) from fuel return line (A).

Go on to Sheet 3

TA248177

FUEL RETURN LINES REPLACEMENT (Sheet 3 of 10)

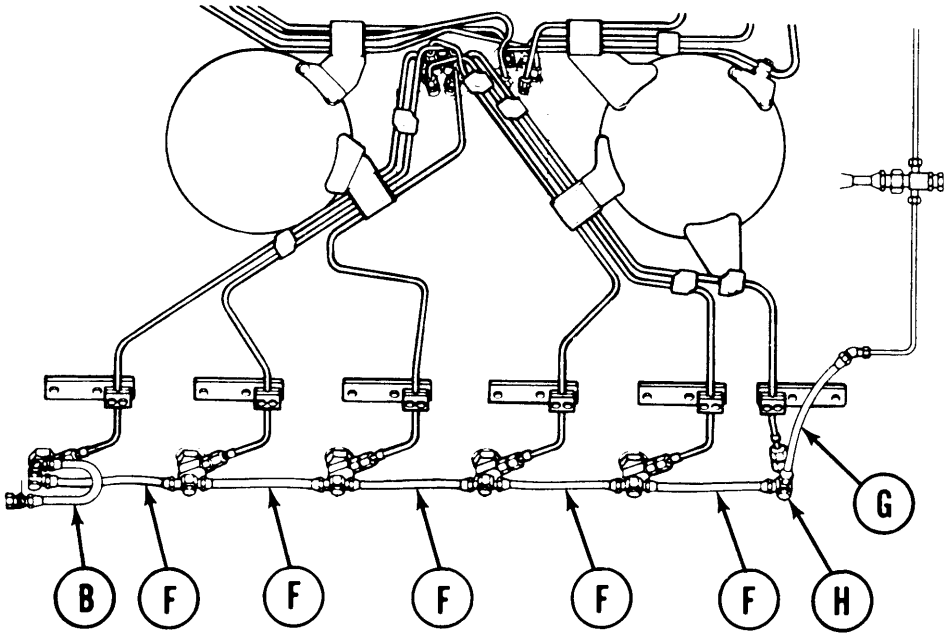

6. Using 9/16-inch wrench, remove fuel return lines (B) and (F).

7. Using 9/16 inch wrench, disconnect fuel return line (G) from connector (H).

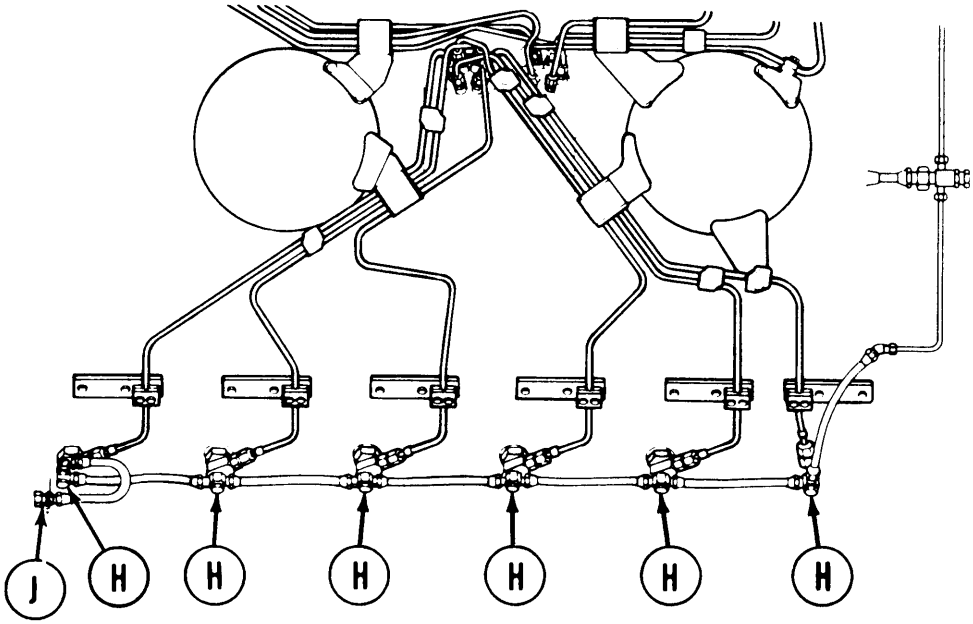

8. Using 11/16 inch socket, remove bolts, washers, and connectors (H) and (J).

9. Install plugs in injector heads.

Go on to Sheet 4

TA248178

FUEL RETURN LINES REPLACEMENT (Sheet 4 of 10)

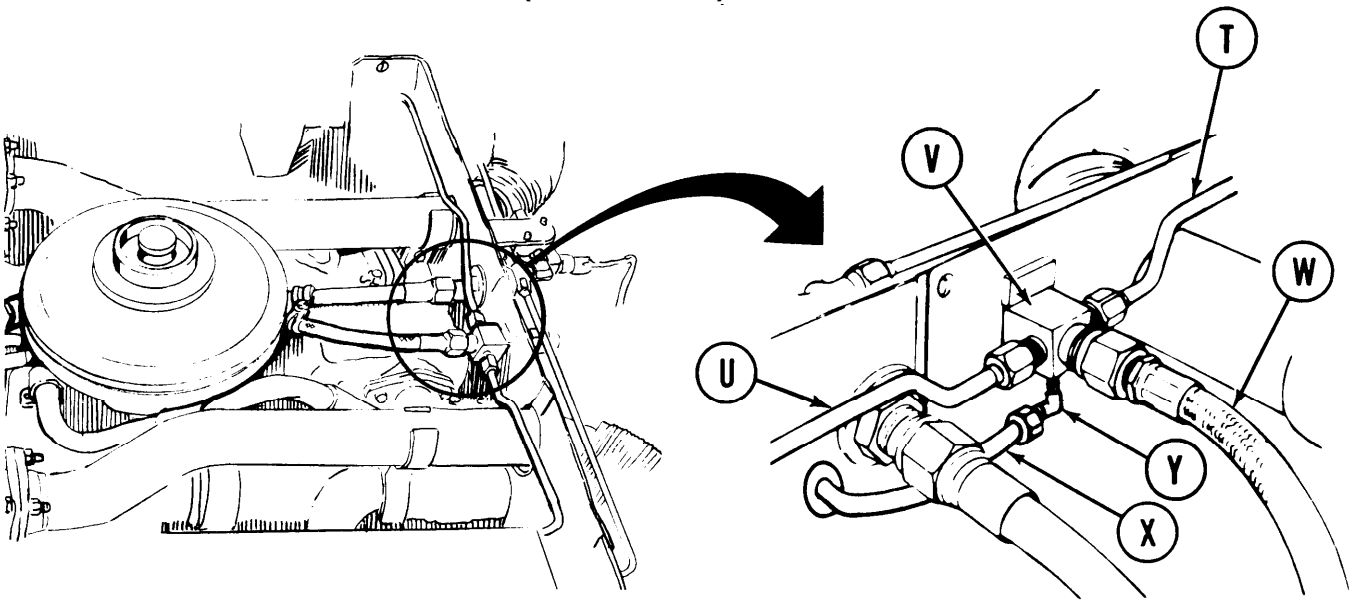

11. Using 9/16 inch wrench, disconnect fuel return lines (T) and (U) from cross tube (V).

12. Using 7/8 inch wrench, disconnect fuel return line (W) from cross tube (V).

13. Using 9/16 inch wrench, disconnect hose (X) from elbow (Y).

14. Using 1/2 inch socket with extension and 1/2 inch wrench, remove four nuts (Z) securing four clamps (AA).

15. Remove fuel return lines (L) and (T) from engine.

16. Using screwdriver, remove four clamps (AA) from fuel return lines (T) and (U).

17. Using 7/16 inch wrench on elbow (AB) and 9/16 inch wrench on fuel return line (L) remove fuel return line (L).

18. Using 7/16 inch wrench on elbow (AB) and 9/16 inch wrench on fuel return line (T), remove fuel return line (T).

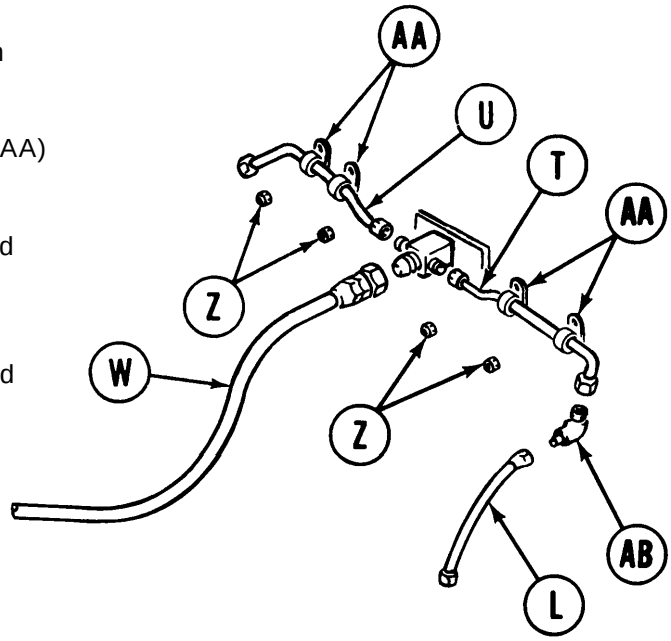

Go on to Sheet 5

TA248179

FUEL RETURN LINES REPLACEMENT (Sheet 5 of 10)

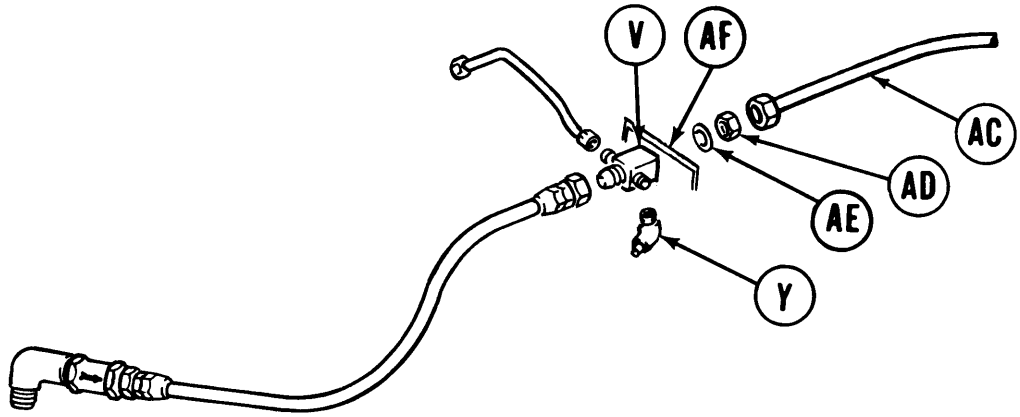

19. Using 1-1/8 inch wrench, disconnect fuel return tube (AC) from cross tube (V).

20. Using 1-1/8 inch wrench, remove nut (AD) from cross tube (V).

21. Remove washer (AE) and cross tube (V) from bulkhead (AF).

22. Place cross tube (V) in vise and using 7/16 inch wrench, remove elbow (Y).

23. Remove cross tube (V) from vise.

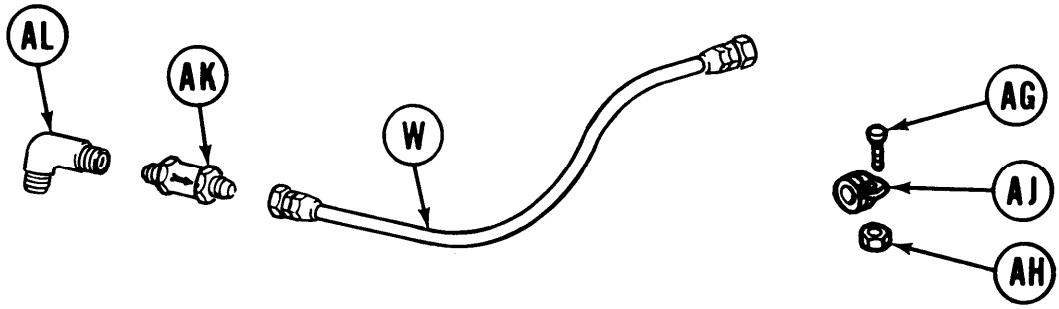

24. Using screwdriver and 3/8 inch socket, remove screw (AG) and nut (AH) securing clamp (AJ).

25. Remove clamp (AJ) from fuel return line (W).

26. Using 3/4 inch wrench on check valve (AK) and 7/8 inch wrench on fuel return line (W), remove fuel return line (W) from check valve (AK).

27. Using 15/16 inch wrench on elbow (AL) and 3/4 inch wrench on check valve (AK), remove check valve (AK) from elbow (AL).

CLEANING AND INSPECTION:

Inspect fuel return lines for deterioration, cracks, stripped threads, and clogging of lines. Replace unserviceable parts as required.

Go on to Sheet 6

TA248180

FUEL RETURN LINES REPLACEMENT (Sheet 6 of 10)

INSTALLATION:

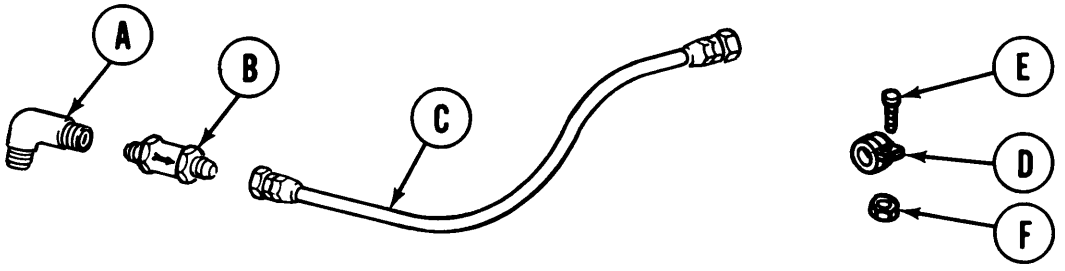

1. Using 15/16 inch wrench on elbow (A) and 3/4 inch wrench on check valve (B), install check valve (B) in elbow (A).

2* Using 3/4 inch wrench on check valve (B) and 7/8 inch wrench On fuel return line (C), install fuel return line (C) on check valve (B).

3. Install clamp (D) on fuel return line (C).

4. Using screwdriver and 3/8 inch socket, install screw (E) and nut (F) securing clamp (D).

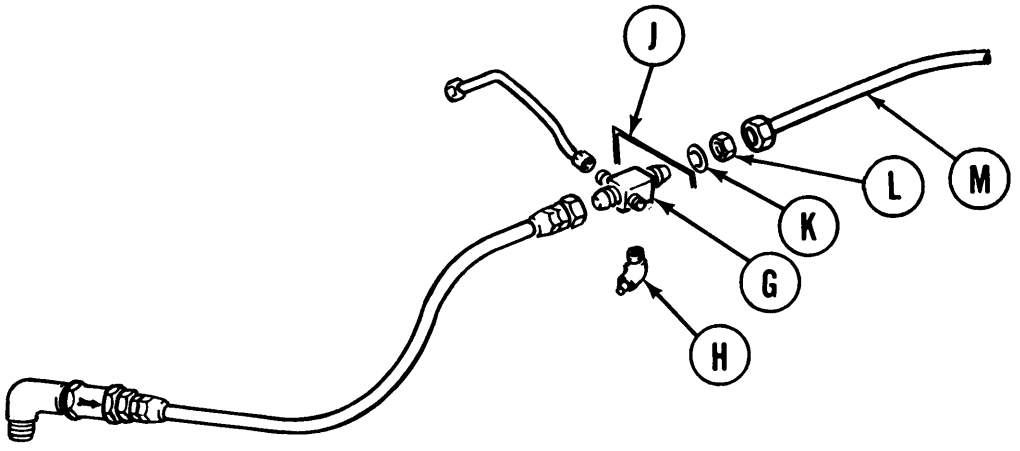

5. Place cross tube (G) in vise and using 7/16 inch wrench, install elbow (H) in cross tube (G). Remove from vise.

6. Place cross tube (G) in position on bulkhead (J) and using hands, install washer (K) and nut (L) on cross tube (G).

7. Using 1-1/8 inch wrench, tighten nut (L) on cross tube (G).

8. Using 1-1/8 inch wrench, install fuel return tube (M) to cross tube (6).

Go on to Sheet 7

TA248181

FUEL RETURN LINES REPLACEMENT (Sheet 7 of 10)

9. Using 1/2 inch wrench on elbow (N) and 9/16 inch wrench on fuel return line (P), install fuel return line (P) on elbow (N).

10. Using 1/2 inch wrench on elbow (N) and 9/16 inch wrench on fuel return line (Q), install fuel return line (Q) on elbow (N).

11. Install two clamps (R) on fuel return line (P).

12. Install two clamps (S) on fuel return line (T).

13. Place fuel return lines (P) and (Q) in position on engine.

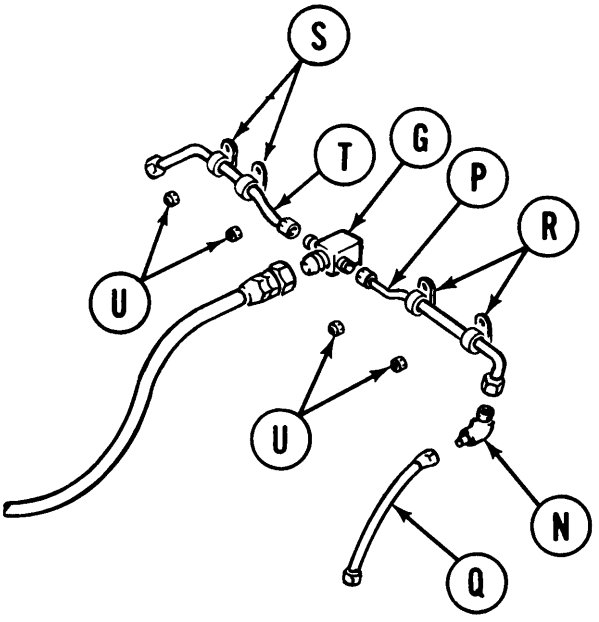

14. Using 9/16 inch wrench, install fuel return line (P) on cross tube (G).

15. Using 9/16 inch wrench, install fuel return line (T) on cross tube (G).

16. Using 1/2 inch socket with extension and 1/2 inch wrench, install four nuts (U) securing four clamps (R) and (S).

17. Using 9/16 inch wrench on hose (V), install hose (V) on elbow (H).

18. Using 7/8 inch wrench, install fuel return line (C) on cross tube (G).

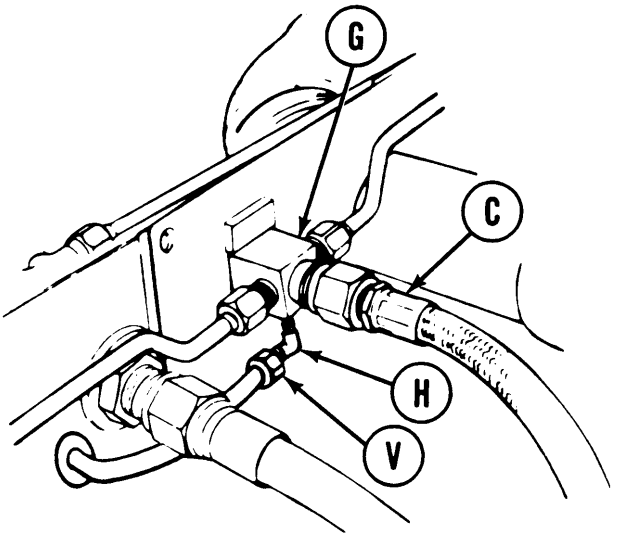

Go on to Sheet 8

TA248182

FUEL RETURN LINES REPLACEMENT (Sheet 8 of 10)

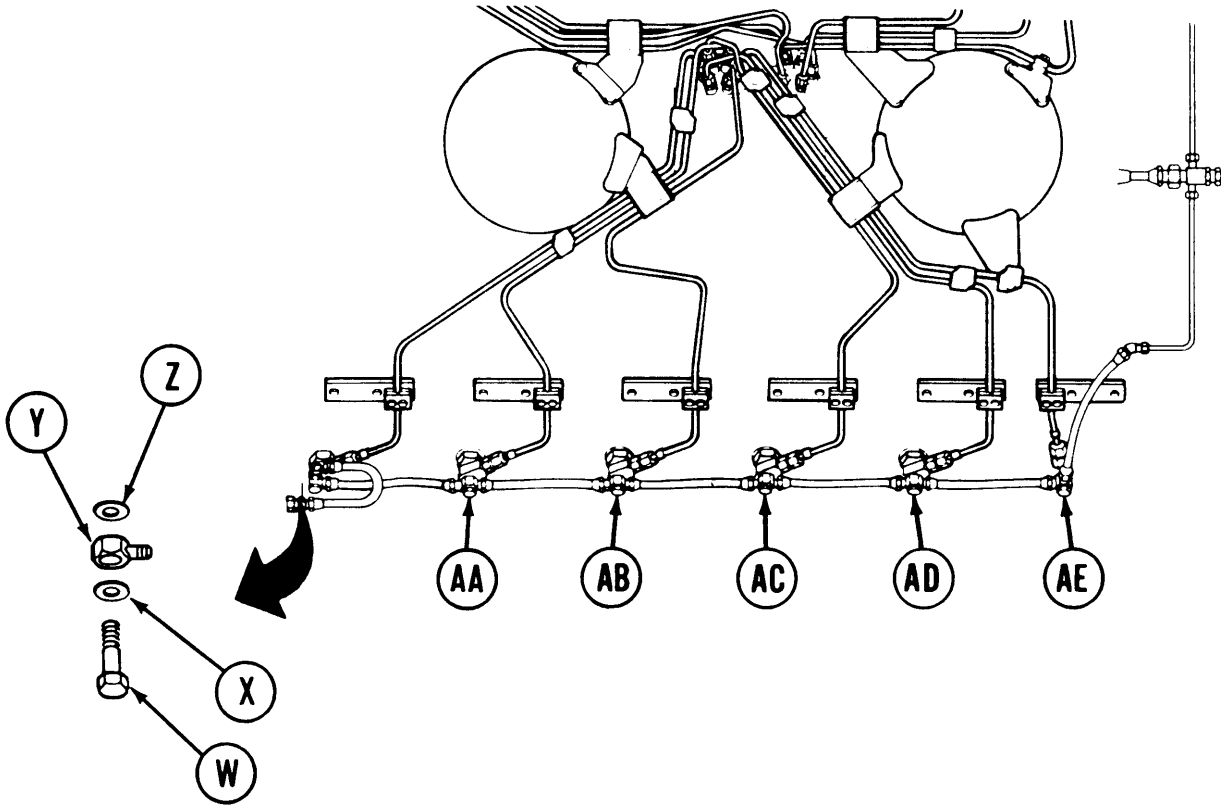

19. Remove plugs from injector head.

NOTE

Connectors on left and right sides are same except for last connector at accessory end of engine. Connector at accessory end on left side of engine has only one connection.

20. Using 11/16 inch socket, install bolt (W) securing washer (X), connector (Y) and washer (Z).

21. Using 11/16 inch socket, install bolts, washers, and connectors (AA), (AB), (AC), (AD), and (AE).

Go on to Sheet 9

TA248183

FUEL RETURN LINES REPLACEMENT (Sheet 9 of 10)

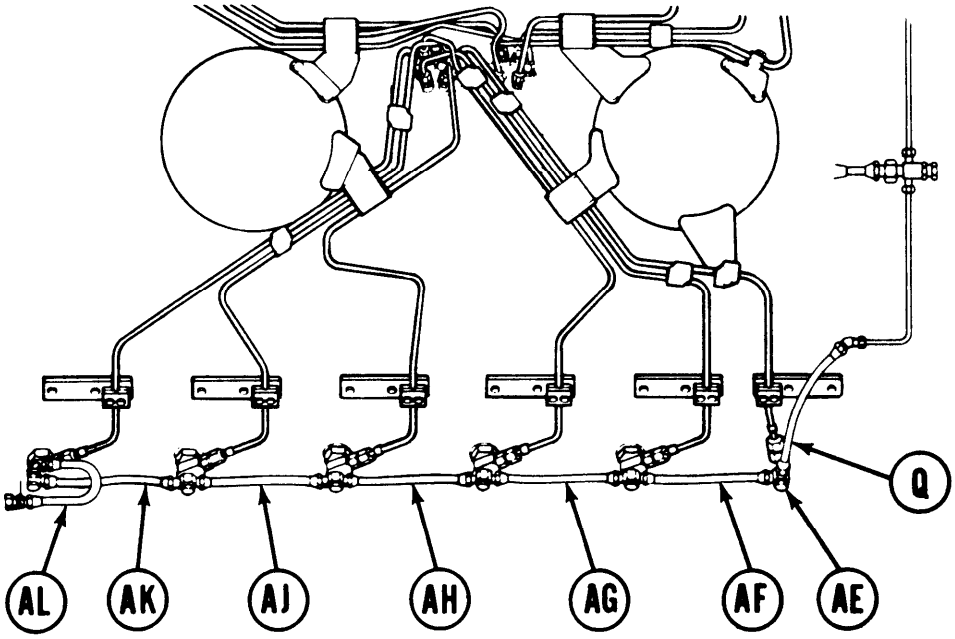

22. Using 9/16 inch wrench, install fuel return line (Q) to connector (AE).

23. Using 9/16 inch wrench, install fuel return lines (AF), (AG), (AH), (AJ) and (AK).

NOTE

Steps 24 thru 27 are for right side only. If left side fuel return lines are being replaced, skip steps 24 thru 27 and go to step 28.

24. Using 9/16 inch wrench, install fuel return line (AL).

Go on to Sheet 10

TA248184

FUEL RETURN LINES REPLACEMENT (Sheet 10 of 10)

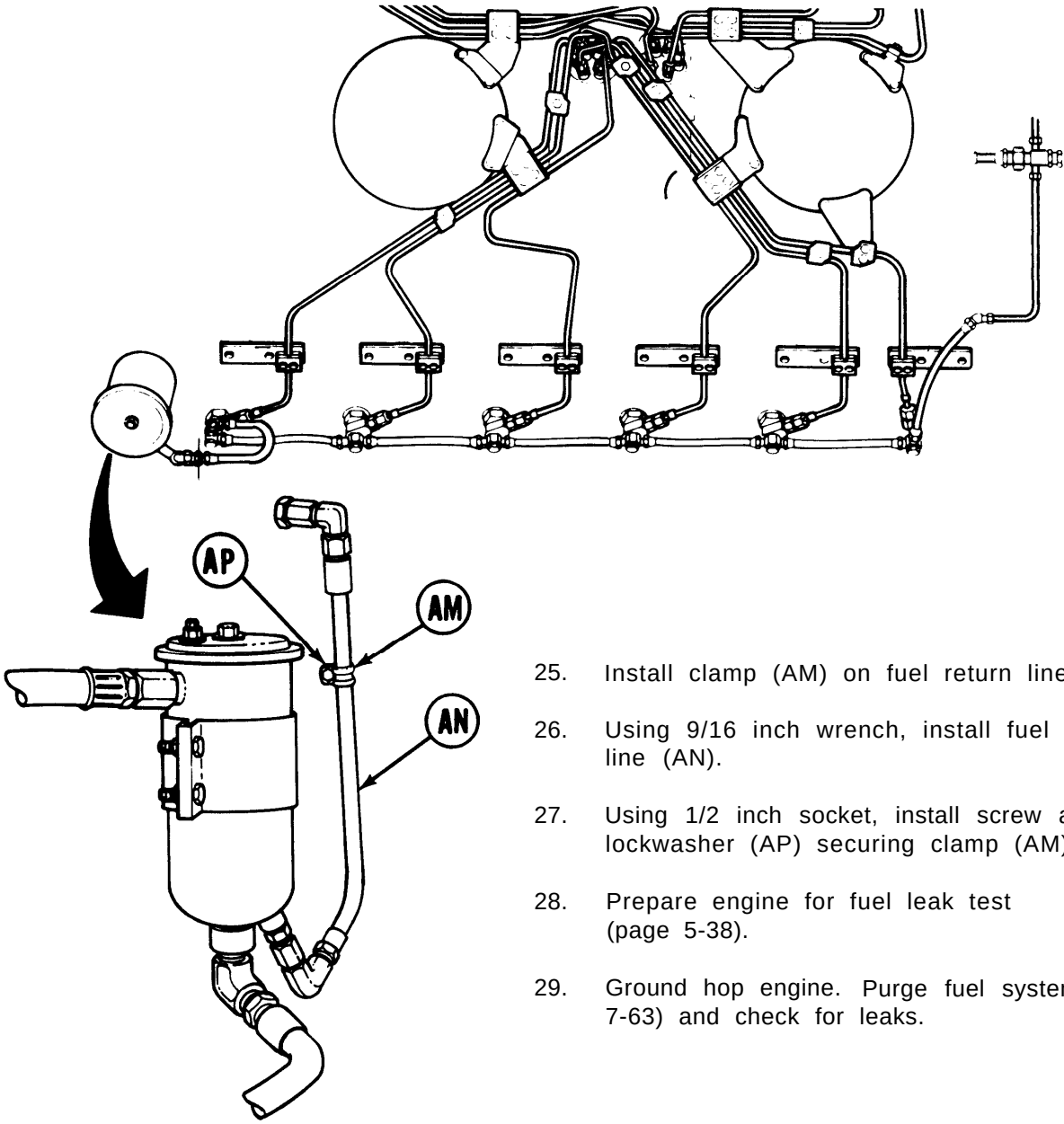

25. Install clamp (AM) on fuel return line (AN).

26. Using 9/16 inch wrench, install fuel return line (AN).

27. Using 1/2 inch socket, install screw and lockwasher (AP) securing clamp (AM).

28. Prepare engine for fuel leak test (page 5-38).

29. Ground hop engine. Purge fuel system (page 7-63) and check for leaks.

30. Install engine access covers (right bank) (page 6-110).

31. Install engine access covers (left bank) (page 6-115).

32. Install cooling fans (page 9-57).

33. Install powerplant (page 5-14).

End of Task

TA248185

INSPECT FUEL INJECTOR NOZZLES AND HOLDERS (Sheet 1 of 1)

REFERENCE: TM 5-5420-202-10

PRELIMINARY PROCEDURES: Remove engine access cover (right bank) (page 6-107)
Remove engine access cover (left bank) (page 6-112)

CAUTION

Do not exceed 700 to 750 rpm and do not run engine for more than 10 minutes at a time. Before restarting, allow engine to cool.

1. Start engine (TM 5-5420-202-10).

2. Place hand between cylinder heads (A) and top of holders (B) on each fuel injector. If movement is felt, stop the engine (TM 5-5420-202-10) and notify support maintenance. If movement is not felt, stop the engine and go to step 3.

3. Install engine access cover (left bank) (page 6-115).

4. Install engine access cover (right bank) (page 6-110).

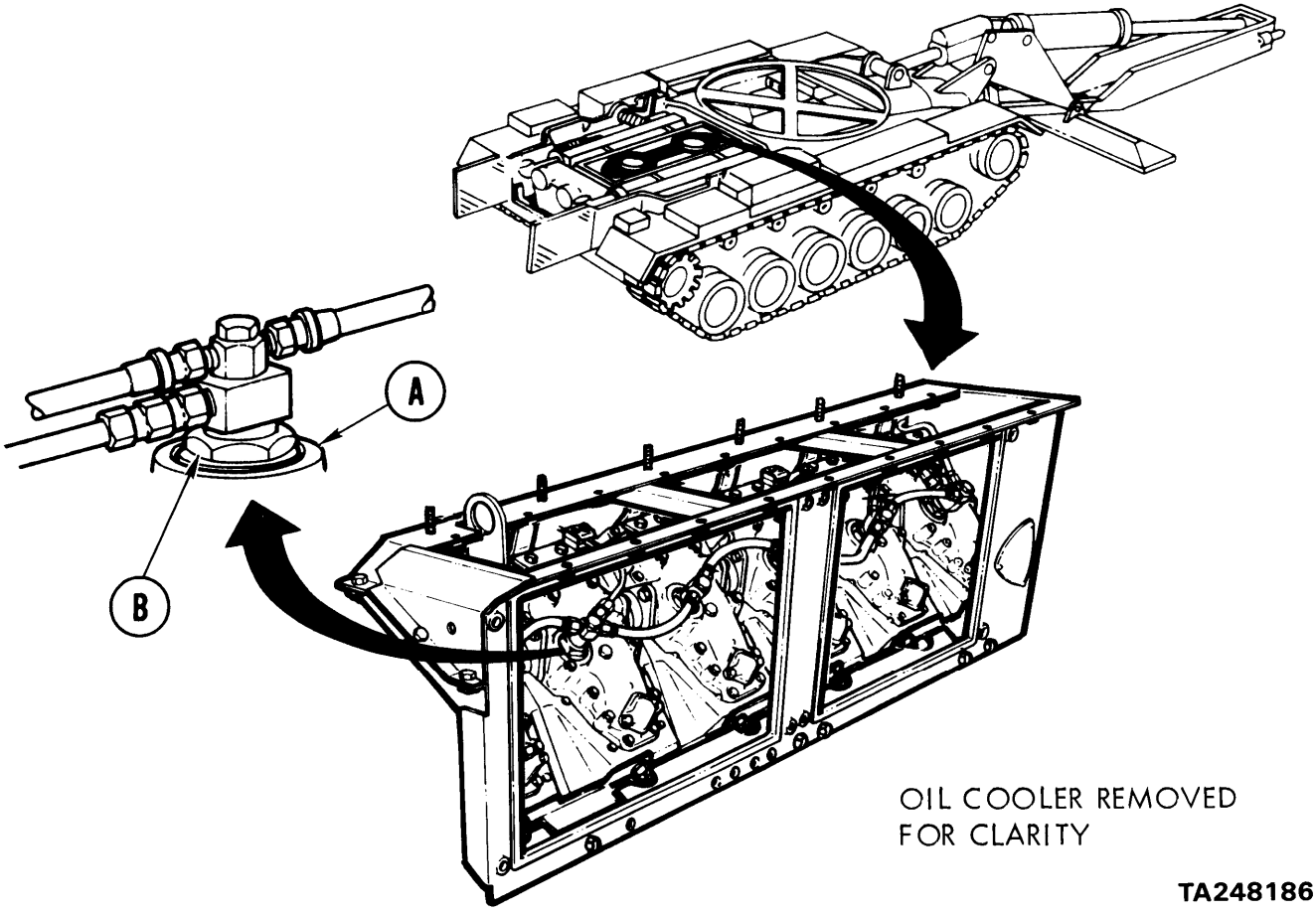

PURGE FUEL SYSTEM (Sheet 1 of 2)

TOOLS: 7/16 in. combination box and open end wrench
Flashlight

PERSONNEL: Two

REFERENCE: TM 5-5420-202-10

PRELIMINARY PROCEDURE: Remove upper engine access *cover* (page 17-11)

PURGING:

1. Using wrench and flashlight, reach through access hatch and loosen fuel filter bleed cap (A).

2. Set FUEL PUMP switch to ON (TM 5-5420-202-10).

3. Set MASTER BATTERY switch to ON (TM 5-5420-202-10).

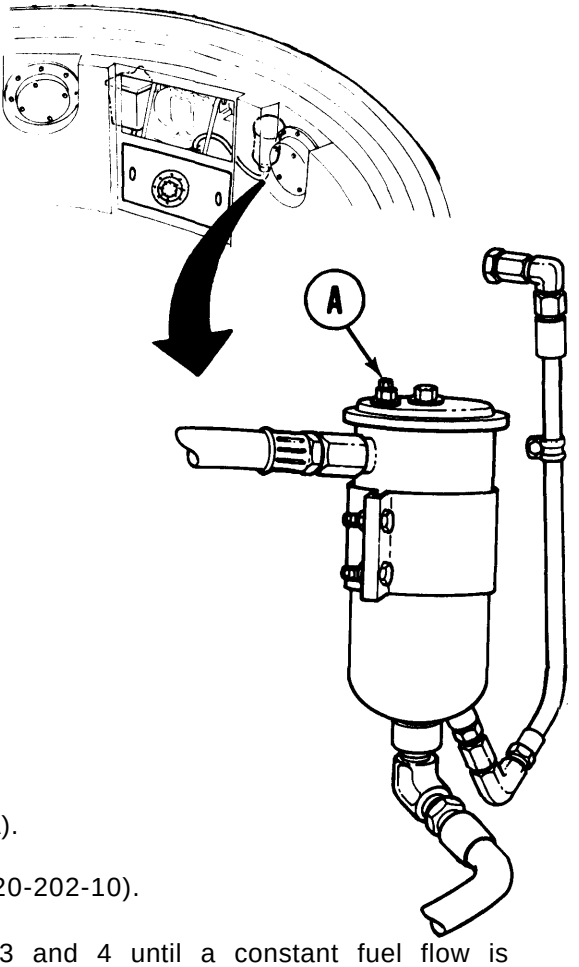

NOTE

If no air bubbles are observed in step 4, go to step 7.

4. Observe for air release bubbles from bleed cap (A).

5. Set MASTER BATTERY switch to OFF (TM 5-5420-202-10).

6. Wait approximately one minute, then repeat steps 3 and 4 until a constant fuel flow is observed from fluid cap (A).

7. Using wrench, tighten bleed cap (A).

8. Set MASTER BATTERY and FUEL PUMP switches to OFF (TM 5-5420-202-10).

Go on to Sheet 2

TA248187

PURGE FUEL SYSTEM (Sheet 2 of 2)

9. Using wrench and flashlight, reach through access hatch and loosen fuel-water separator bleed cap (B).

10. Manually operate primer pump handle (TM 5-5420-202-10).

11. Observe air release bubbles from fuel-water separator bleed cap (B).

12. Continue to operate primer pump until a constant fuel flow is observed from bleed cap (B).

13. Using wrench, close bleed cap (B).

14. Install engine upper access cover (page 17-12).

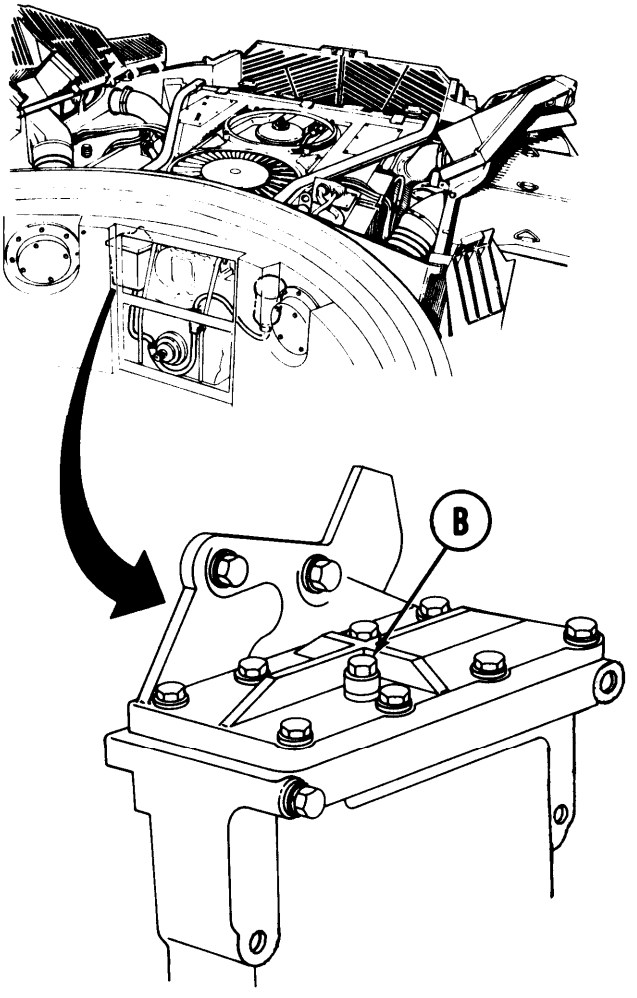

TA248188

End of Task

AIR CLEANER INTAKE AND HOSE REPLACEMENT (Sheet 1 of 5)

PROCEDURE INDEX

PROCEDURE	PAGE
Removal	7-65
Installation	7-68

TOOLS: 1/2 in. socket with 1/2 in. drive
9/16 in. socket with 1/2 in. drive
5 in. extension with 1/2in. drive
3/8 in. open end wrench
Flat-tip screwdriver
Putty knife
Ratchet with 1/2 in. drive
Universal joint with 1/2 in. drive

SUPPLIES: Gasket
Gasket (2 required)
Adhesive (Item 2, Appendix D)
Rags (Item 65, Appendix D)
Lockwashers (18 required)

REFERENCE: TM 5-5420-202-10
TM 5-5420-228-24

PRELIMINARY PROCEDURE: Open top grille doors (TM 5-5420-202-10)
Remove ventilator control box (TM 5-5420-228-24)

NOTE

Removal of the left or right intake hose is the same. Left side shown.

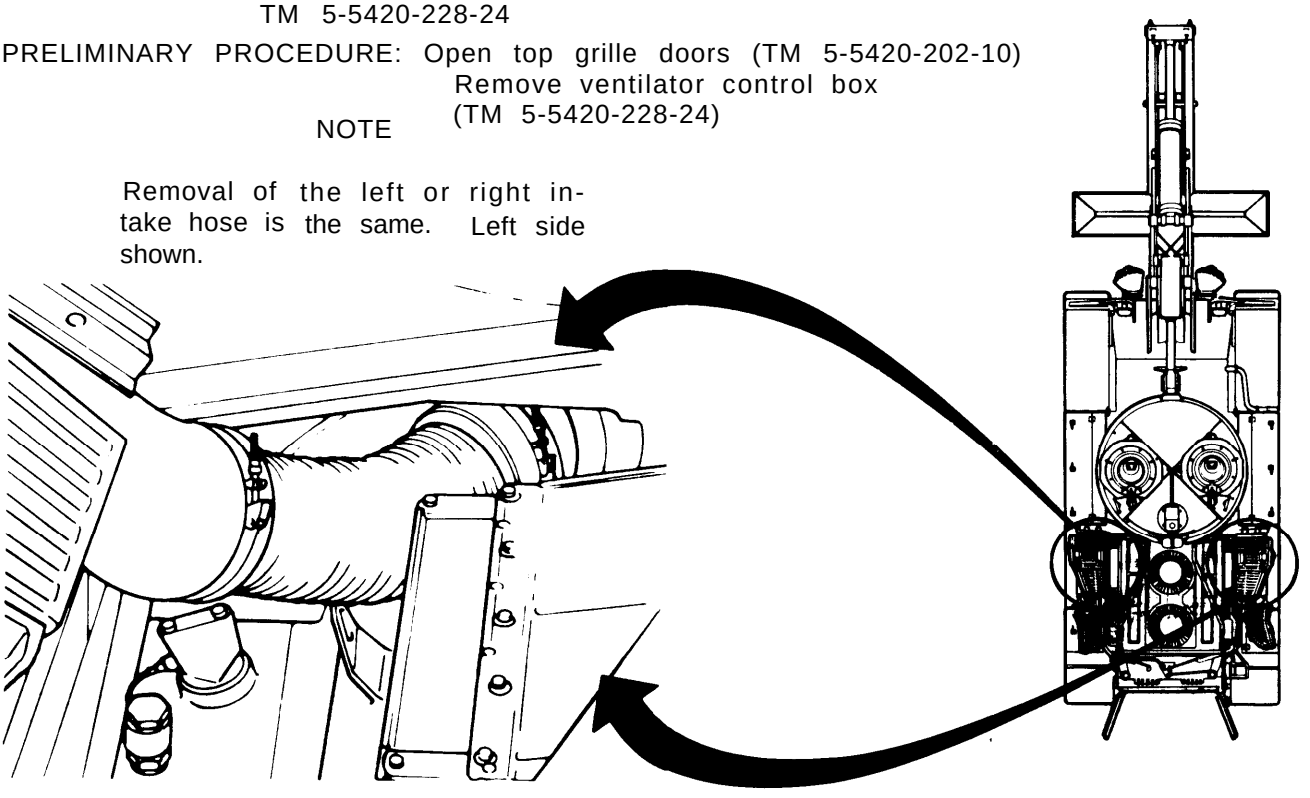

Go on to Sheet 2

TA248189

AIR CLEANER INTAKE AND HOSE REPLACEMENT (Sheet 2 of 5)

1. Using a 3/8 inch wrench, loosen clamp nut (A) at end of intake hose (B).

2. Slide clamp (C) over intake hose (B) to middle of hose.

3. Using a screwdriver, pry hose (B) from elbow (D), remove clamp (C).

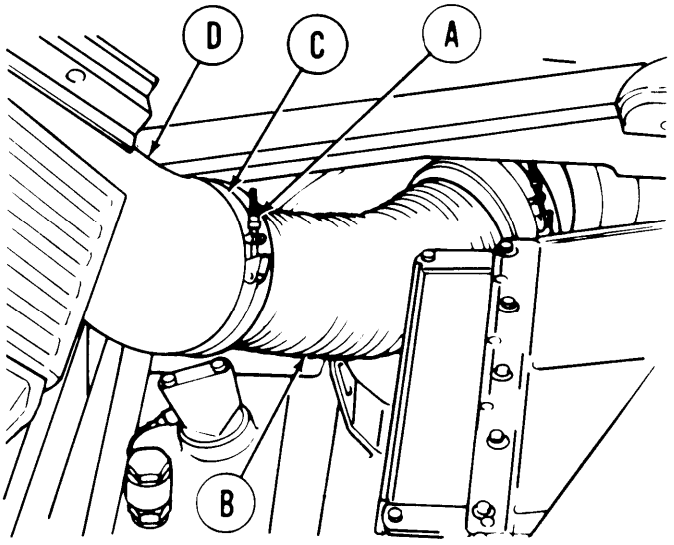

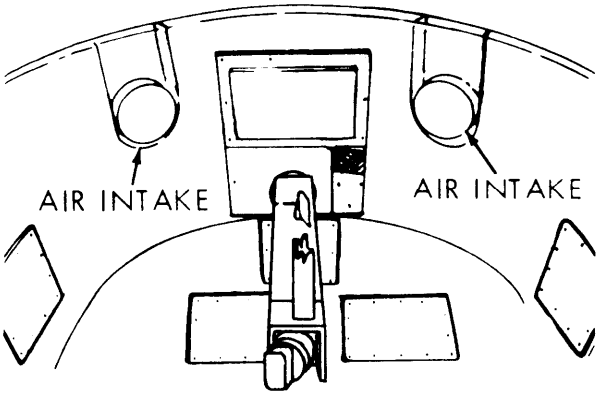

4. Close top grille doors and go inside crew compartment.

5. Using a 1/2 inch socket, remove four screws and lockwashers (E).

6. Remove cover and gasket (F).

7. Inspect gasket cemented to cover (F). If damaged, use a putty knife to remove gasket. Apply adhesive to new gasket and position onto cover.

8. Using a 9/16 inch socket remove eight nuts and lockwashers (G).

9. Remove air intake flange assembly (H) and hose (B).

10. Inspect gasket (J) cemented to bulkhead. If damaged, use a putty knife to remove gasket. Apply adhesive to new gasket (J) and Position on bulkhead.

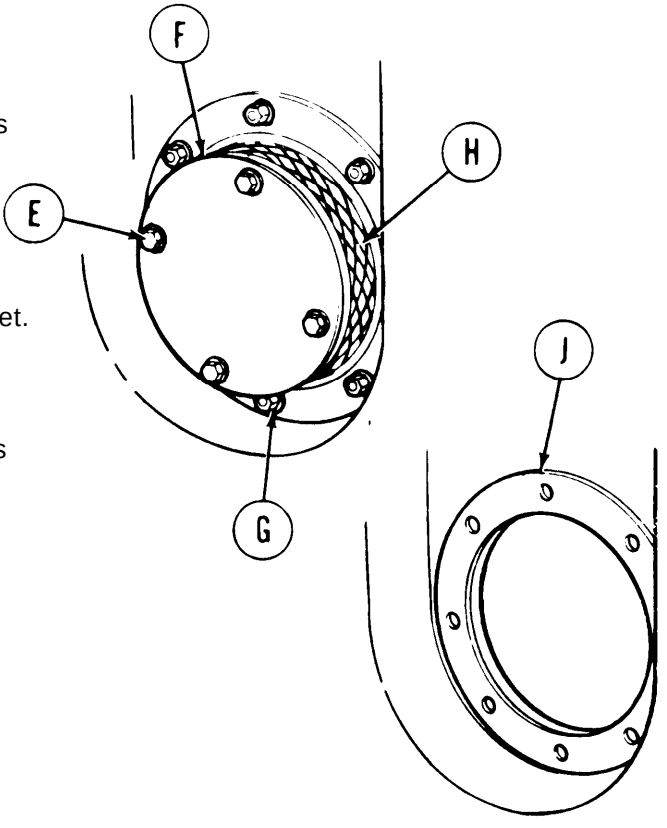

Go on to Sheet 3

TA248190

AIR CLEANER INTAKE AND HOSE REPLACEMENT (Sheet 3 of 5)

11. Using an extension, universal joint, and 9/16 inch socket, remove six nuts and lockwashers (K).

12. Using a 3/8 inch wrench, loosen clamp nut (L) at end of intake hose (B), remove clamp (M).

13. Remove hose (B) from flange (N).

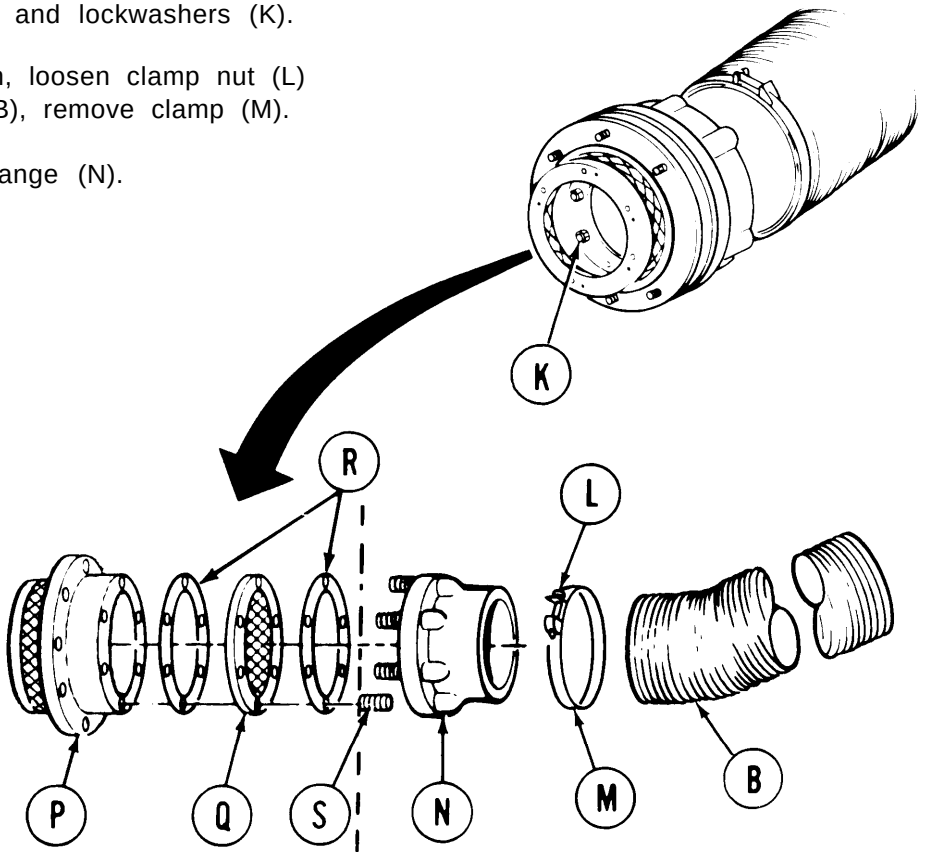

14. Separate intake (P) and screen (Q) with gaskets (R) from flange (N).

15. Clean and inspect screen and gaskets. If screen is damaged or defective, replace.

16. If one or both gaskets (R) are damaged, scrape gaskets (R) from screen (Q). Apply adhesive to new gasket and position onto screen.

17. Inspect and replace studs (S) in flange (N) as necessary.

Go on to Sheet 4

TA248191

AIR CLEANER INTAKE AND HOSE REPLACEMENT (Sheet 4 of 5)

INSTALLATION:

1. Position screen (A) with gaskets (B) over studs in flange (C).

2. Position intake (D) over studs in flange (C).

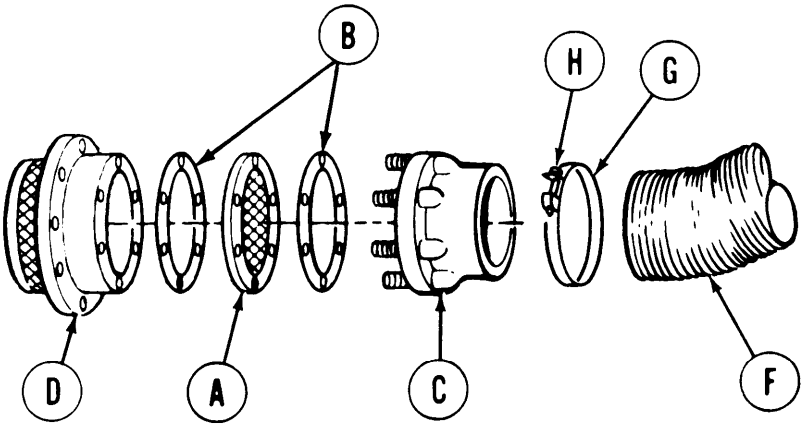

3. Install six nuts and lockwashers (E) to secure intake (D), screen (A), and flange (C). Using an extension, universal joint, and 9/16 inch socket, tighten nuts (E).

4. Position hose (F) and clamp (G) onto flange (C). Using a 3/8 inch wrench, tighten nut (H) on clamp (G) securing hose (F) to flange (C).

5. Position intake (D) and flange (C) (assembled in steps 1 through 4 above), with flange (C) toward engine, over studs on bulkhead.

6. Install eight lockwashers and nuts (J) to secure intake and flange to bulkhead. Using a 9/16 inch socket, tighten nuts (J).

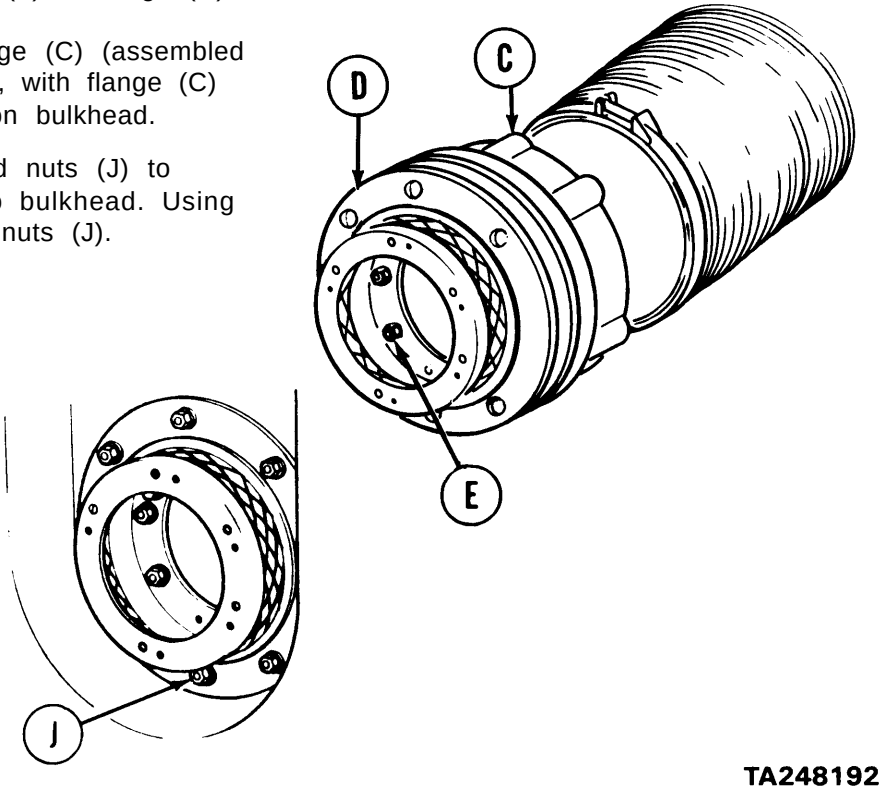

Go on to Sheet 5

TA248192

AIR CLEANER INTAKE AND HOSE REPLACEMENT (Sheet 5 of 5)

7. Position cover (K) and gasket (L) on intake.

8. Install four screws and lockwashers (M) to secure cover (K) and gasket (L) to intake. Using a 1/2 inch socket, tighten screws (M).

9. Go back to engine compartment and open top grille doors (TM 5-5420-202-10).

10. Slide clamp (N) over intake hose (P) to middle of hose.

11. Install hose (P) onto elbow (Q).

12. Position clamp (N) onto edge of hose. Using a 3/8 inch wrench, tighten clamp nut (R) securing hose (P) to elbow (Q).

13. Close top grille doors (TM 5-5420-202-10).

14. Install ventilator control box (TM 5-5420-228-24).

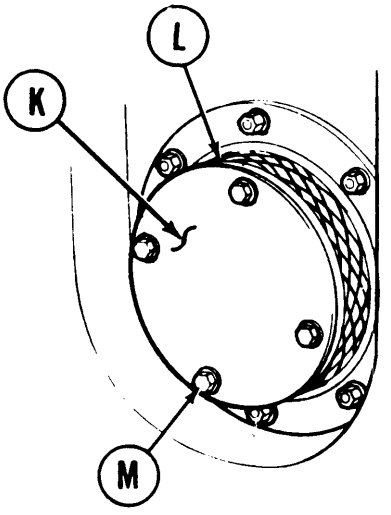

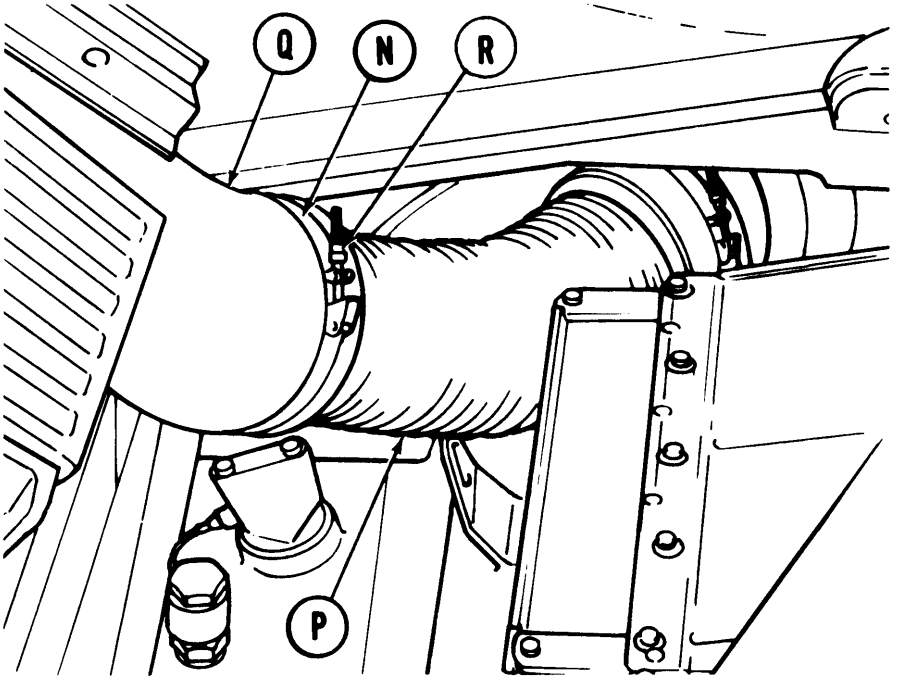

End of Task

TA248193

AIR CLEANER PLUG REPLACEMENT (Sheet 1 of 1)

TOOLS: 1-1/8 in. socket with 1/2 in. drive
Ratchet with 1/2 in. drive
7/16 in. combination box and open end wrench

SUPPLIES: Sealer (Item 54, Appendix D)

NOTE

Removal of the left or right plugs are the same. Left side shown.

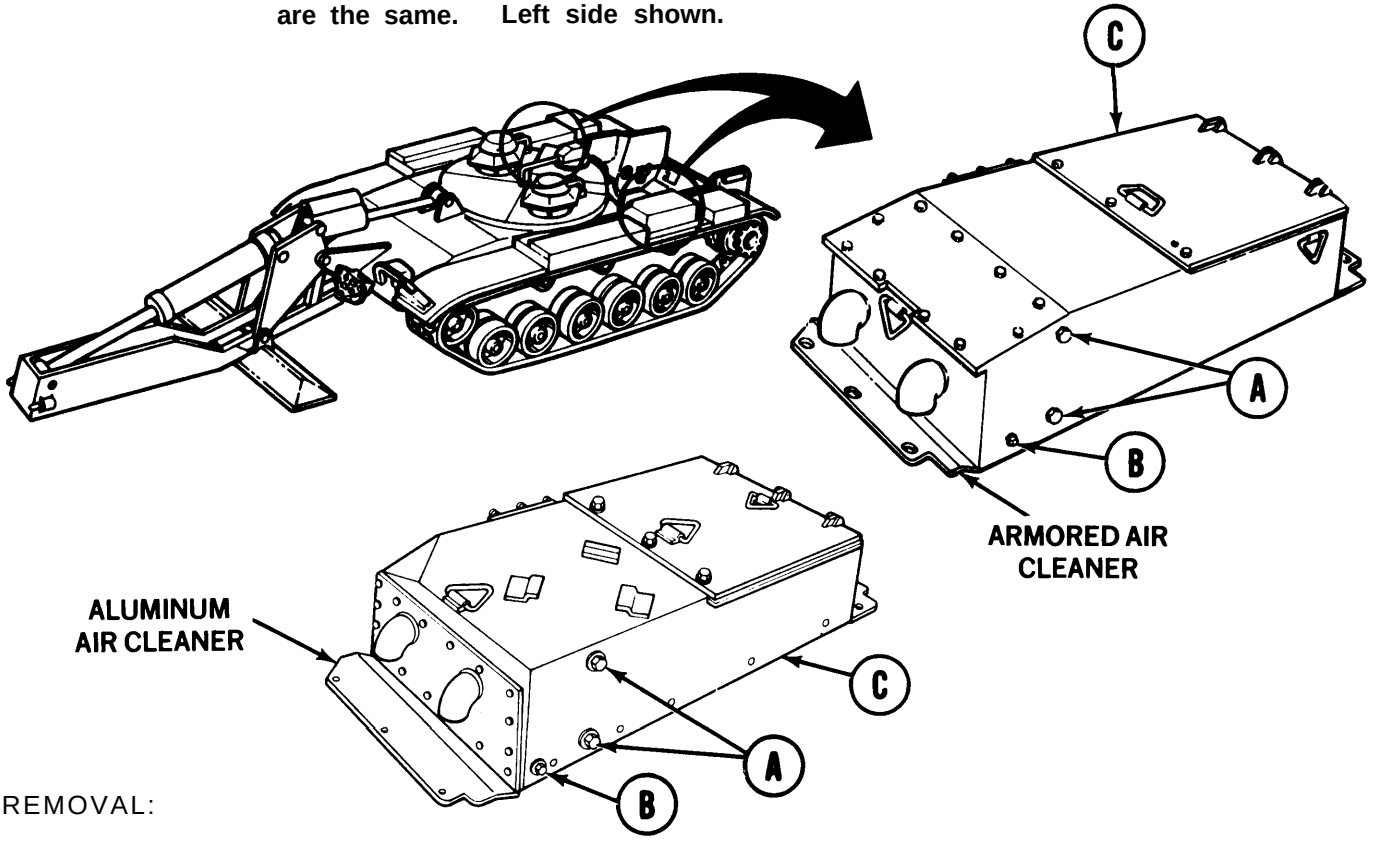

REMOVAL:

1. Using 1-1/8 inch socket, remove two plugs (A) from air cleaner housing (C).
2. Using 7/16 inch wrench, remove plug (B) from air cleaner housing (C).
3. Inspect plug threads for damage. Replace as necessary.

INSTALLATION:

1. Coat threads of three plugs (A and B) with sealer and install into air cleaner housing (C).
2. Using 1-1/8 inch wrench, tighten two plugs (A).
3. Using 7/16 inch wrench, tighten plug (B).

End of Task

TA248194

AIR CLEANER INTAKE ELBOW REPLACEMENT (Sheet 1 of 3)

TOOLS: 3/8 in. combination open and box end wrench
9/16 in. combination open and box end wrench
9/16 in. socket with 3/8 in. drive
10 in. extension with 3/8 in. drive
Ratchet with 3/8 in. drive
Universal joint with 3/8 in. drive
Pry bar

SUPPLIES: Gasket
Self-locking nuts (10 required)

REFERENCE: TM 5-5420-202-10

PRELIMINARY PROCEDURE: Open top grille doors (TM 5-5420-202-10)

NOTE

Removal of the left or right intake elbow is the same. Left side shown.

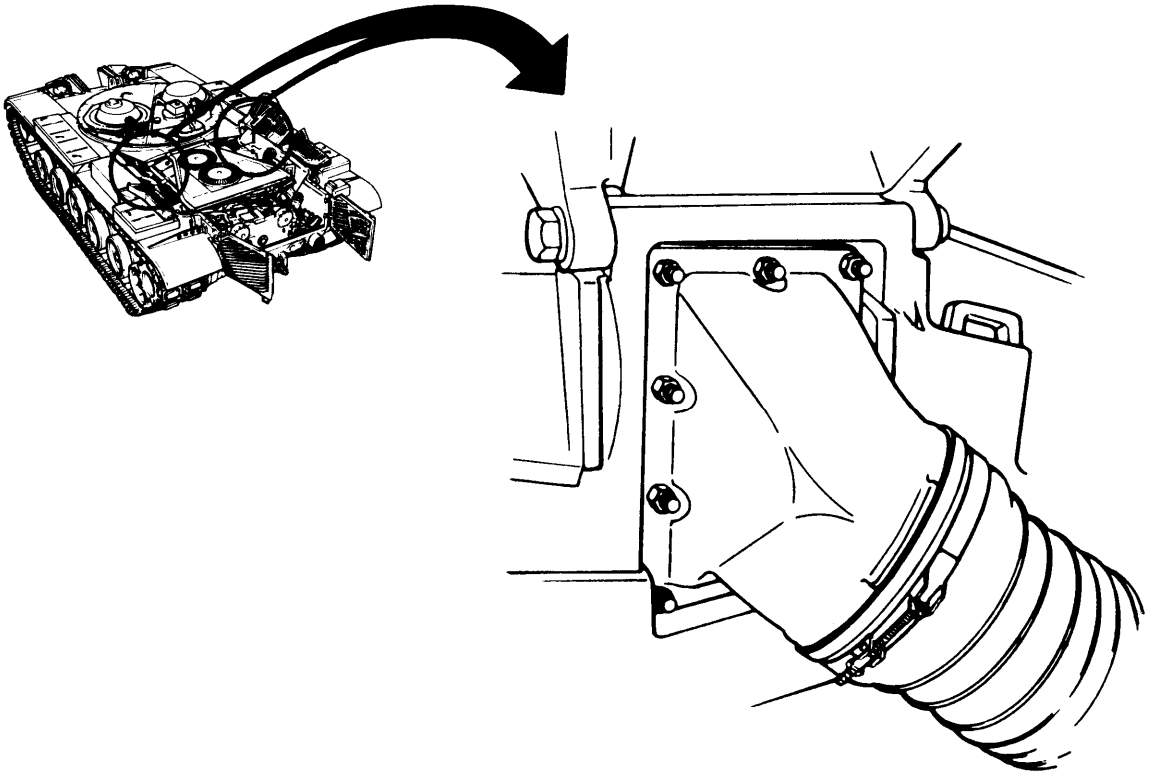

Go on to Sheet *2*

TA248195

AIR CLEANER INTAKE ELBOW REPLACEMENT (Sheet 2 of 3)

REMOVAL:

1. Using 3/8 inch wrench, loosen clamp nut (A).

2. Slide clamp (B) down to middle of hose (C).

3. Disconnect hose (C) from elbow (D).

4. Using 9/16 inch socket, universal joint, extensions and 9/16 inch wrench, as necessary, remove 10 self-locking nuts (E) securing elbow (D).

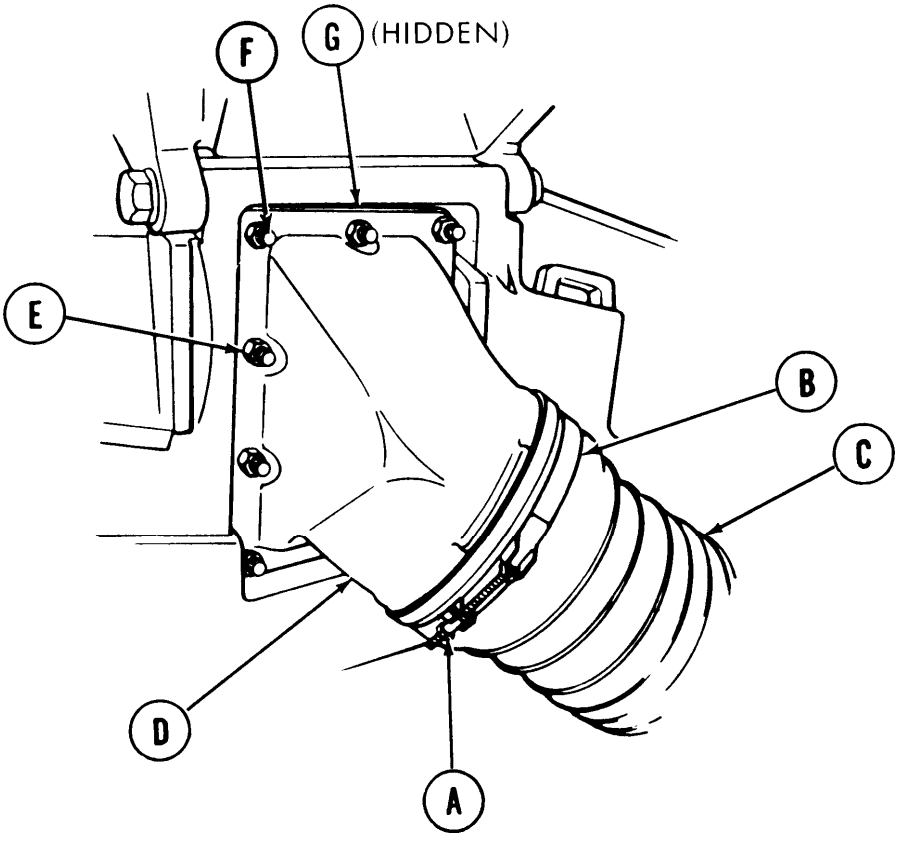

5. Using pry bar, pry elbow (D) from air cleaner.

6. Remove elbow (D) off studs (F) of air cleaner.

7. Remove and discard gasket (G) from studs of air cleaner.

TA248196

Go on to Sheet 3

AIR CLEANER INTAKE ELBOW REPLACEMENT (Sheet 3 of 3)

INSTALLATION:

1. Position new gasket (A) onto studs of air cleaner.
2. Install elbow (B) onto studs of air cleaner.
3. Install 10 self-locking nuts (C) onto studs to secure elbow (B) to air cleaner.

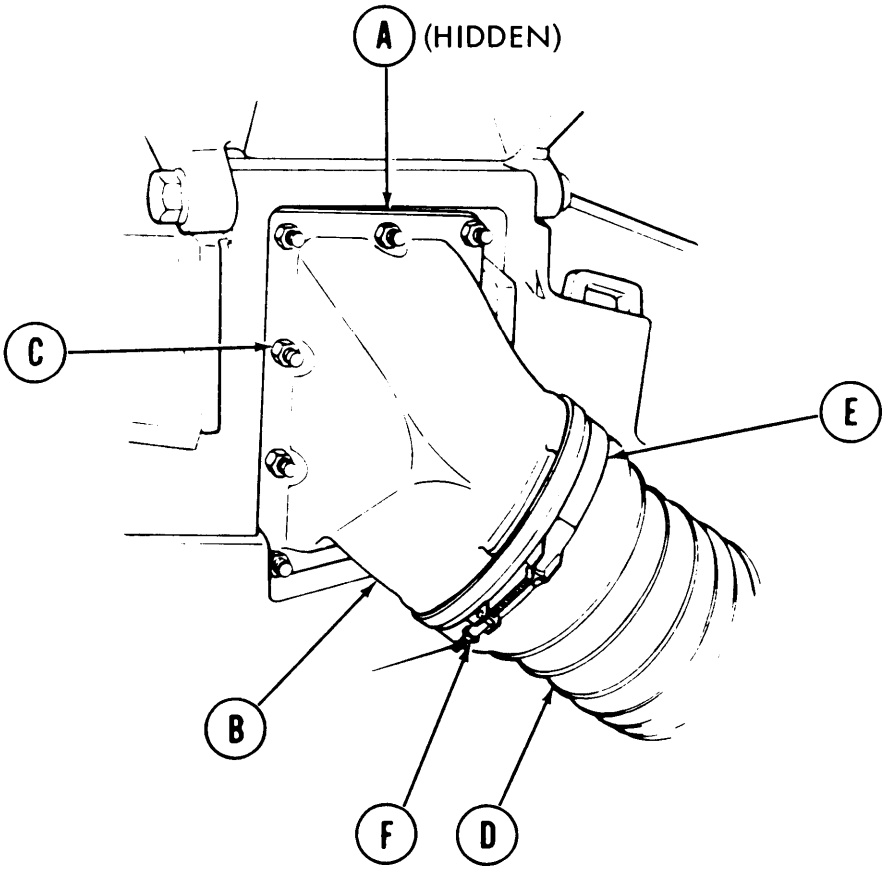

4. Using 9/16 inch socket, universal joint, extension, and 9/16 inch wrench, as necessary, tighten 10 nuts (C).
5. Install hose (D) onto elbow (B).
6. Slide clamp (E) up over hose (D) and onto elbow (B).
7. Using 3/8 inch wrench, tighten clamp nut (F) to secure clamp (E).
8. Close top grille doors (TM 5-5420-202-10).

End of Task

TA248197

AIR CLEANER TURBOCHARGER ELBOW REPLACEMENT (Sheet 1 of 3)

TOOLS: 1/2 in. combination box and open end wrench
1/2 in. socket with 1/2in. drive
10 in. extension with 1/2 in. drive
Ratchet with 1/2 in. drive
Flat-tip screwdriver

SUPPLIES: Gasket
Lockwashers (8 required)

REFERENCE: TM 5-5420-202-10

PRELIMINARY PROCEDURE: Open top grille doors (TM 5-5420-202-10)

NOTE

Removal of left or right turbocharger elbow is the same. Left side shown.

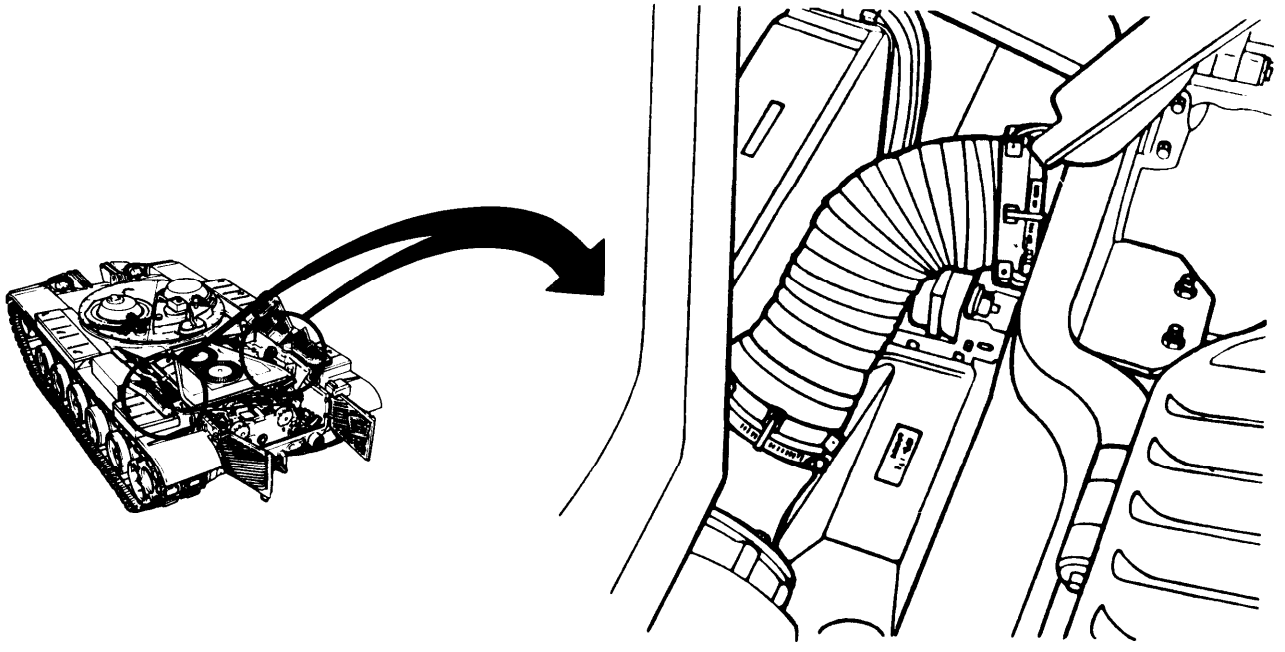

Go on to Sheet 2

TA248198

AIR CLEANER TURBOCHARGER ELBOW REPLACEMENT (Sheet 2 of 3)

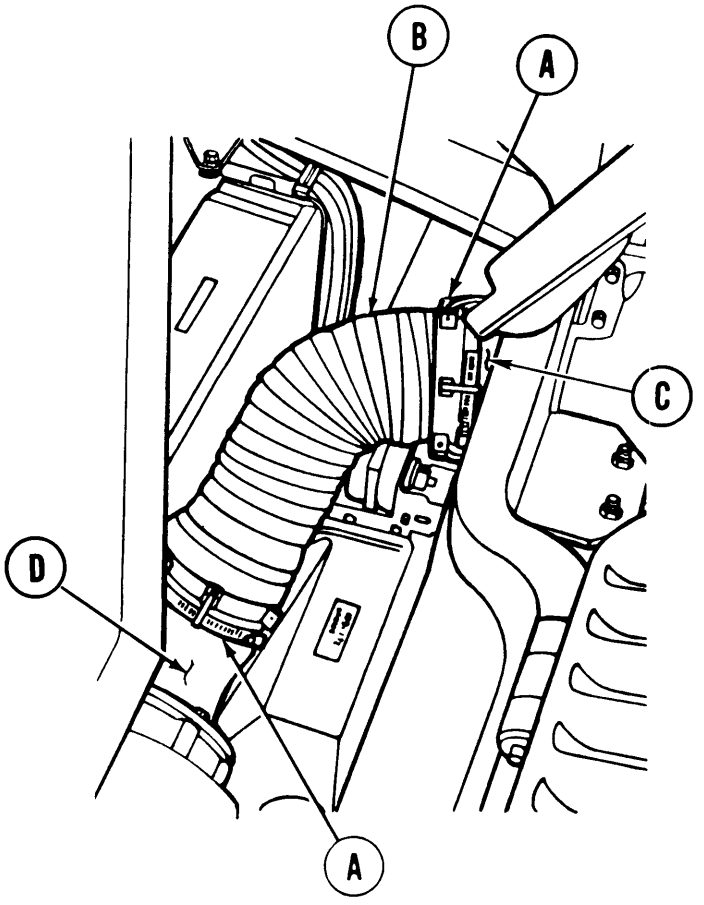

REMOVAL:

1. Using screwdriver, loosen two clamps (A).
2. Disconnect hose assembly (B) from outlet elbow (C) of air cleaner and elbow (D) of turbocharger.
3. Remove hose assembly (B).

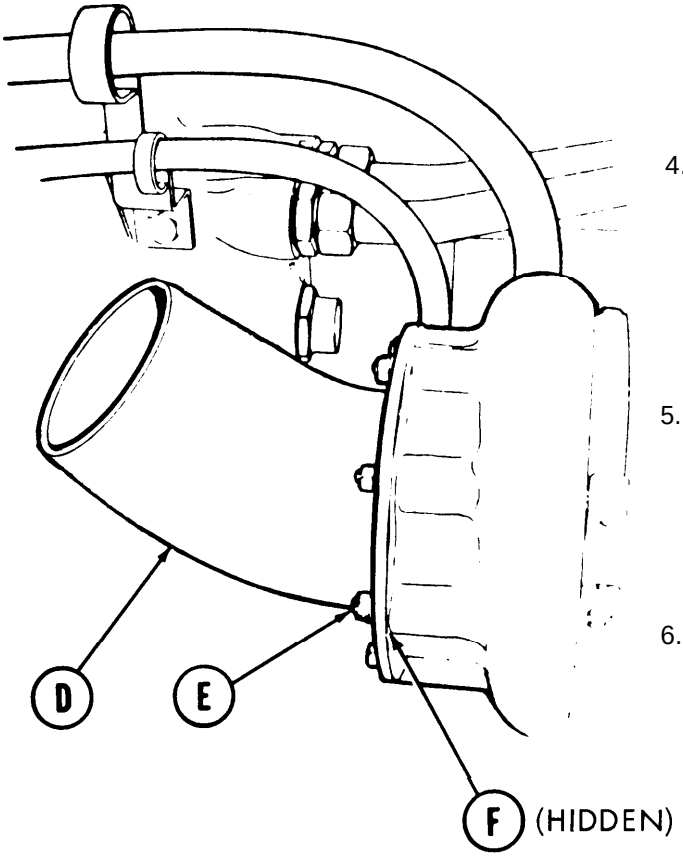

4. Using socket with extension and wrench, remove eight nuts, lockwashers, and flat washers (E) securing elbow (D) to turbocharger.
5. Remove elbow (D) and gasket (F). Throw gasket away.
6. Make sure turbocharger inlet mating surface is not nicked, burred, or damaged. If turbocharger inlet mating surf ace is damaged, notify support maintenance. Make sure eight nuts and studs are not stripped or damaged. Repair as necessary.

TA248199

AIR CLEANER TURBOCHARGER ELBOW REPLACEMENT (Sheet 3 of 3)

INSTALLATION:

1. Position new gasket (A) onto studs of turbocharger.

2. Position elbow (B) onto studs of turbocharger.

3. Install eight flat washers, lock-washers, and nuts (C) onto studs to secure elbow.

4. Using socket with extension and wrench, tighten nuts (C).

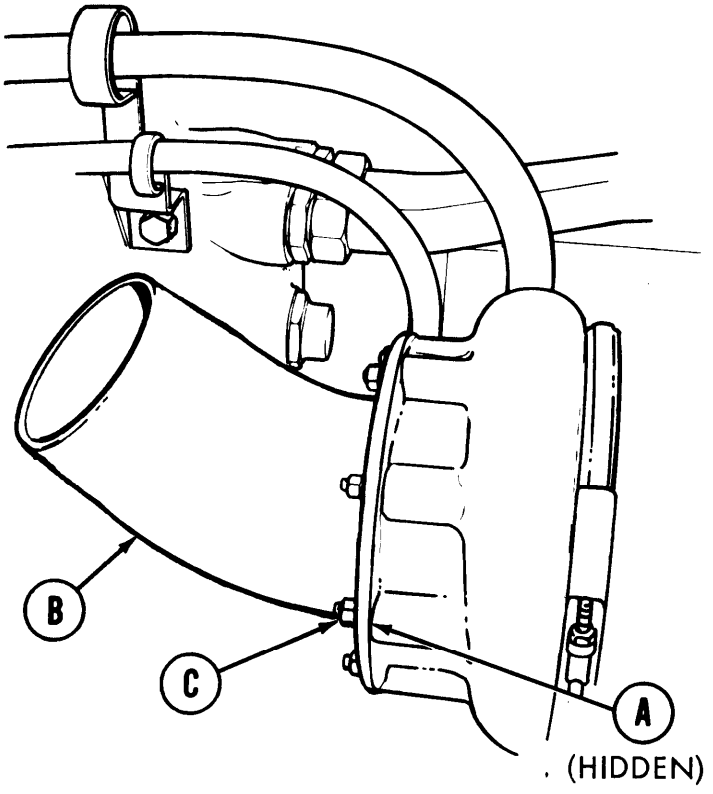

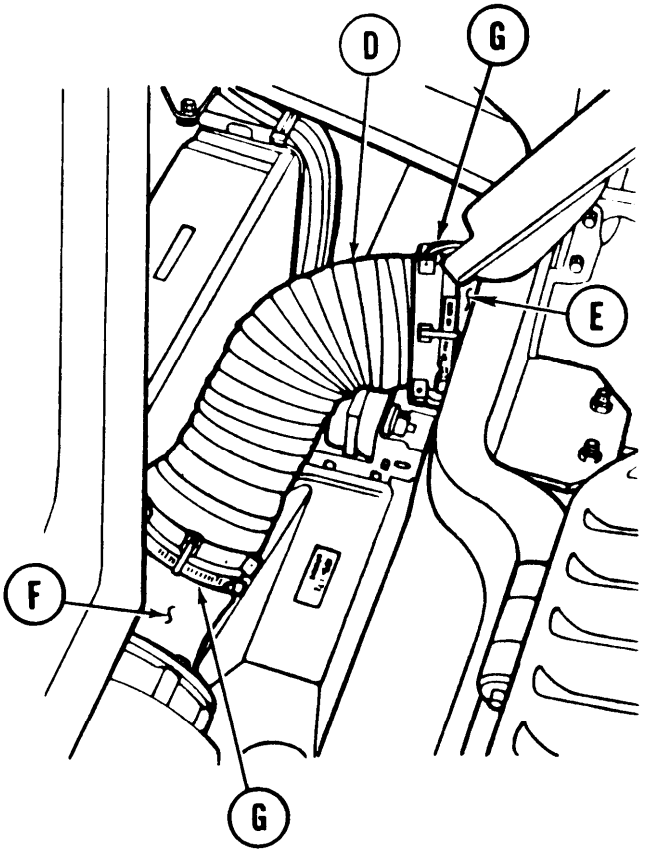

5. Position one end of hose assembly (D) onto outlet elbow (E) of air cleaner and other end over elbow (F) of turbocharger.

6. Make sure that fingers of hose assembly grip lip of elbows. Using screwdriver, tighten clamps (G).

7. Close top grille doors (TM 5-5420-202-10).

End of Task

TA248200

AIR CLEANER (ARMORED) CENTRIFUGAL FAN POWER LEAD REPLACEMENT (Sheet 1 of 3)

TOOLS: Slip joint pliers

REFERENCE: TM 5-5420-202-10

PRELIMINARY PROCEDURES: Open top grille doors (TM 5-5420-202-10)
Remove air cleaner centrifugal fan cover (page 7-103)

NOTE

Removal of left or right centrifugal fan power lead is the same. Left side shown.

REMOVAL:

1. Disconnect electrical connector (A).
2. Push shell (B) back away from contact (C).
3. Using slip joint pliers, remove washer (D) from contact (C).
4. Remove shell (B).

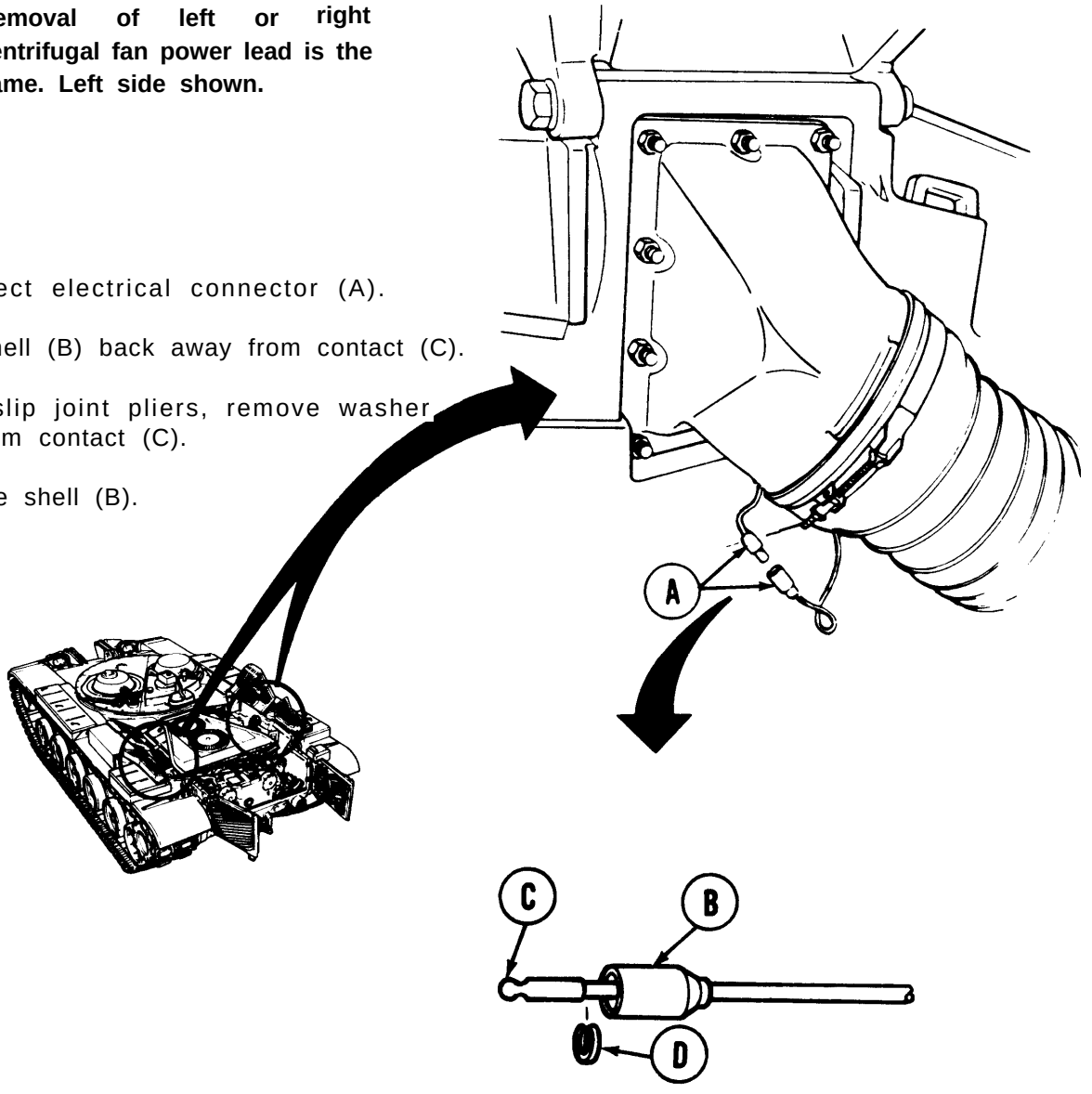

Go on to Sheet 2

TA248201

AIR CLEANER (ARMORED) CENTRIFUGAL FAN POWER LEAD REPLACEMENT (Sheet 2 of 3)

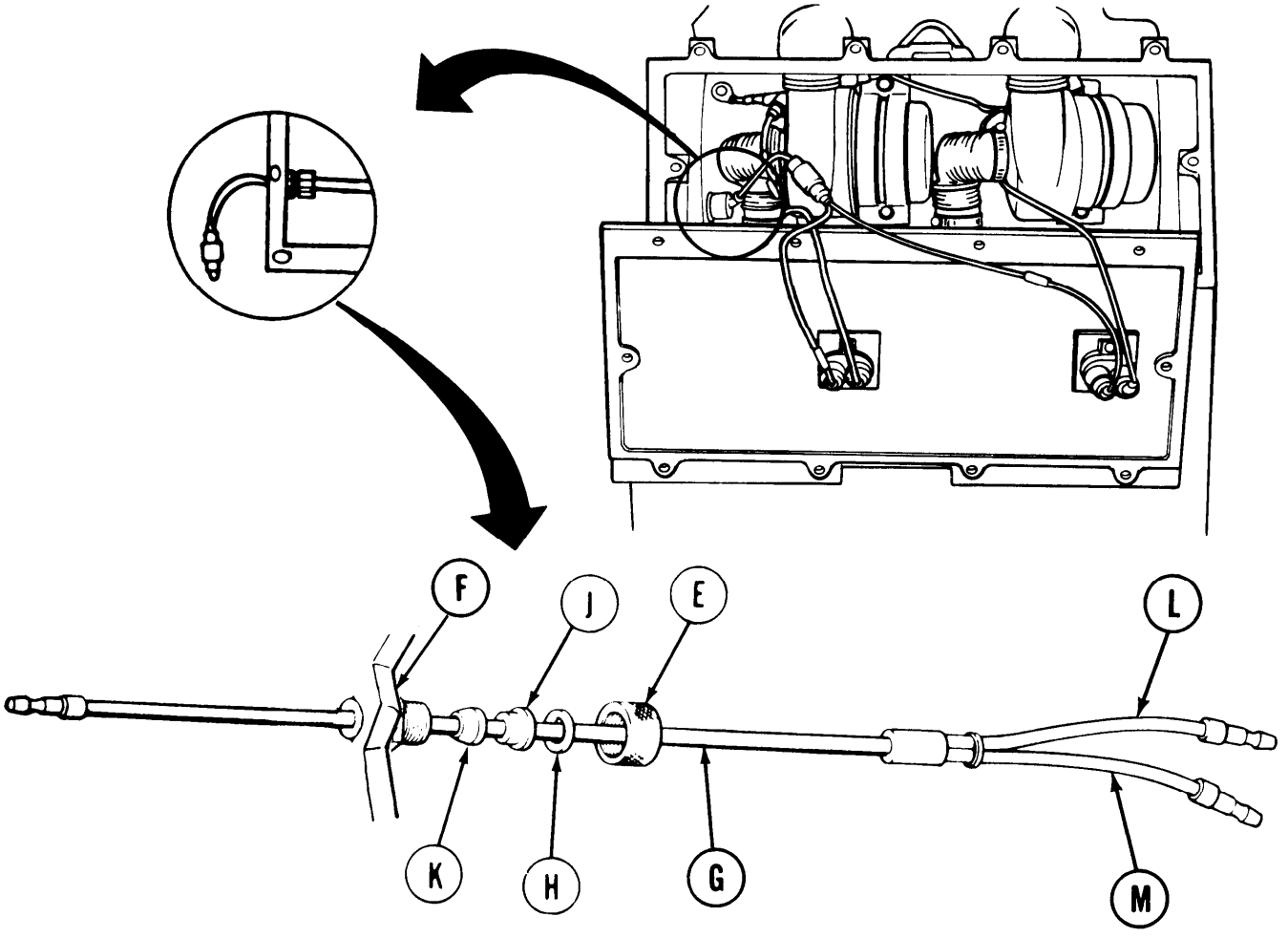

5. Using slip joint pliers, disconnect nut (E) from adapter (F).

6. Pull lead (G) out of adapter (F). When lead is pulled, washers (H) and (J) and gasket (K) will also be pulled out.

7. Remove washers (H) and (J), gasket (K), and nut (E) from lead (G).

8. Disconnect two leads (L) and (M) from centrifugal fan circuit breakers (N).

9. Inspect all parts removed for defects or deterioration. Replace as necessary.

Go on to Sheet 3

TA248202

AIR CLEANER (ARMORED) CENTRIFUGAL FAN POWER LEAD REPLACEMENT (Sheet 3 of 3)

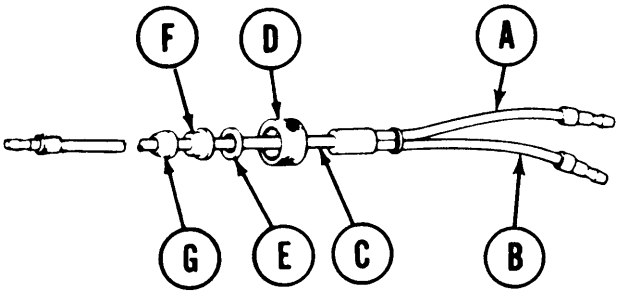

INSTALLATION:

1. Connect two leads (A) and (B) to centrifugal fan circuit breakers and position the following parts on lead (C): nut (D), washers (E) and (F), gasket (G).

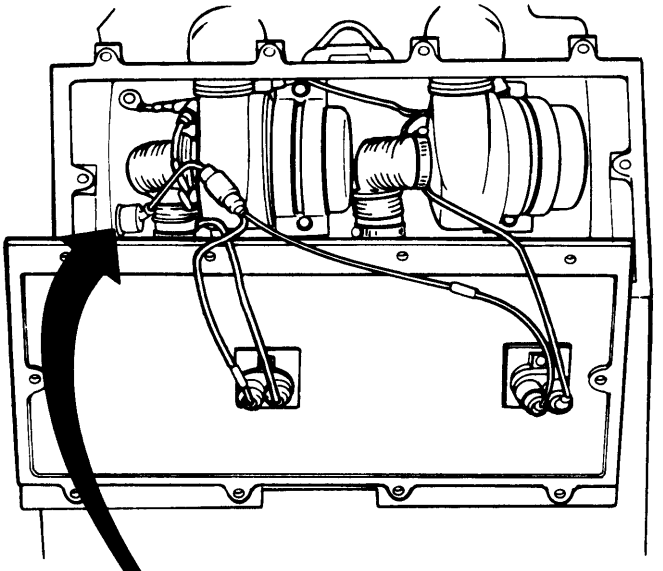

2. Install lead (C) through adapter (H). Pull approximately 10 inches of lead out of adapter.

3. Install shell (J) approximately 2 inches over end of lead (C) and install washer (K).

4. Pull shell (J) toward end until it is stopped by washer (K).

5. Push gasket (G) and washers (E) and (F) into adapter (H).

6. Thread nut (D) onto adapter (H). Use slip joint pliers and tighten nut.

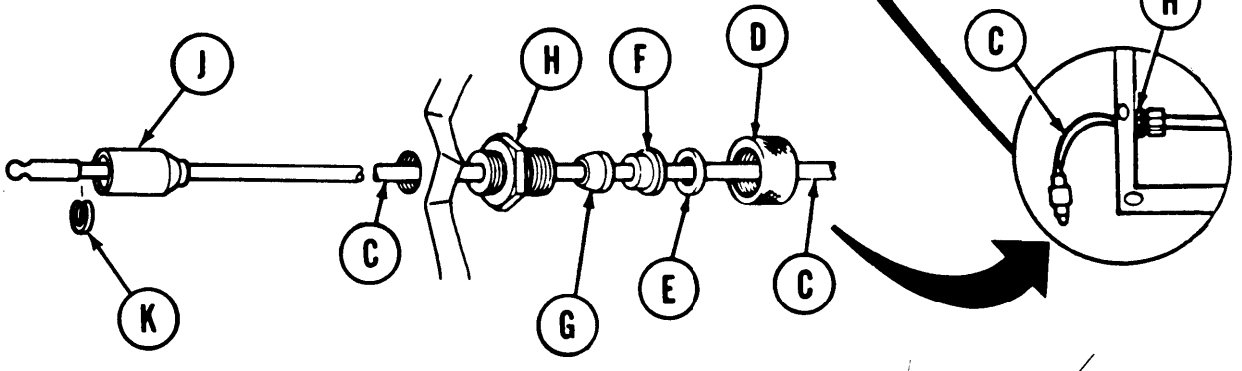

7. Install air cleaner centrifugal fan cover (page 7-105).

8. Connect electrical connectors (L).

9. Check operation of air cleaner (TM 5-5420-202-10).

10. Close top grille doors (TM 5-5420-202-10).

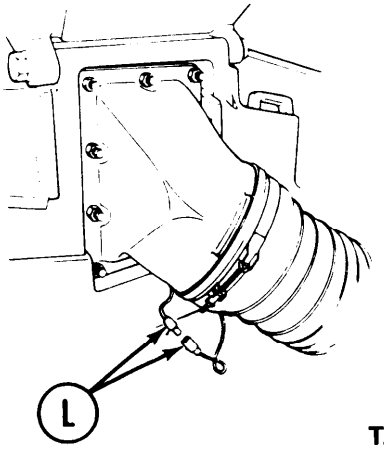

End of Task

TA248203

AIR CLEANER (ALUMINUM) CENTRIFUGAL FAN POWER LEAD REPLACEMENT (Sheet 1 of 4)

PROCEDURE INDEX

PROCEDURE	PAGE
Removal	7-80
Installation	7-82

TOOLS: 1 in. combination box and open end wrench
Slip joint pliers

SUPPLIES: Gasket

REFERENCE: TM 5-5420-202-10

PRELIMINARY PROCEDURES: Open top deck grille doors (TM 5-5420-202-10)
Remove air cleaner centrifugal fan cover (page 7-106)

REMOVAL:

1. Disconnect electrical connector (A).

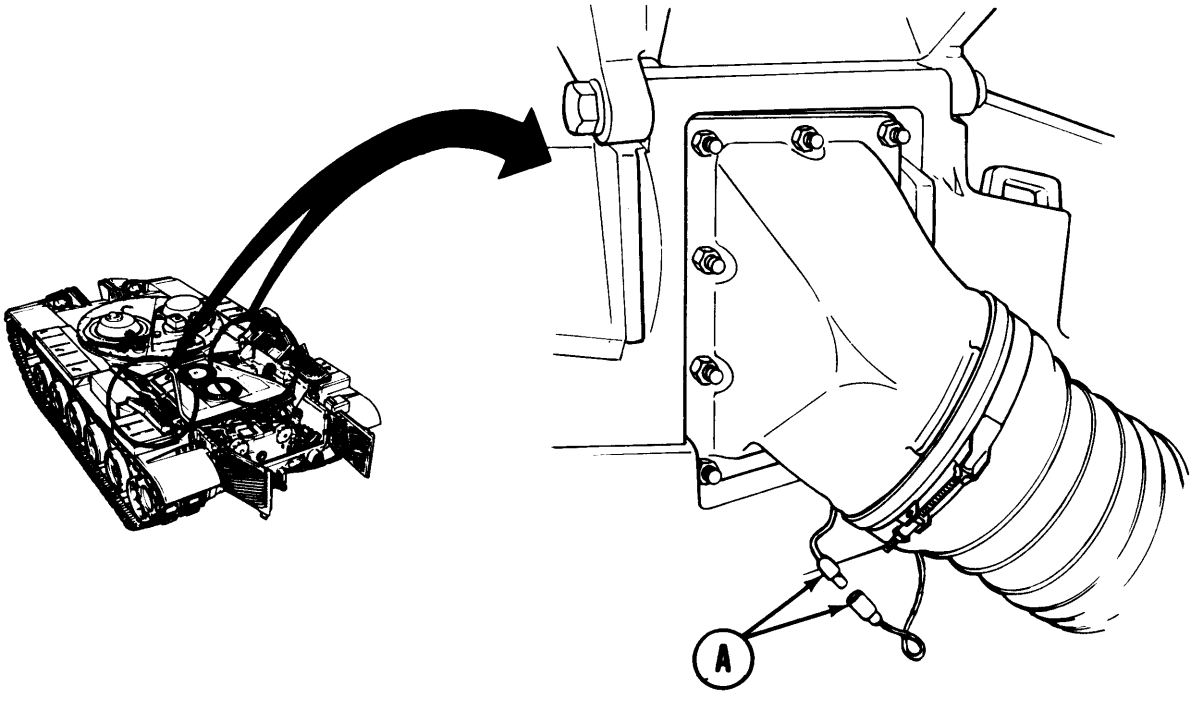

Go on to Sheet 2

TA248204

AIR CLEANER (ALUMINUM) CENTRIFUGAL FAN POWER LEAD REPLACEMENT (Sheet 2 of 4)

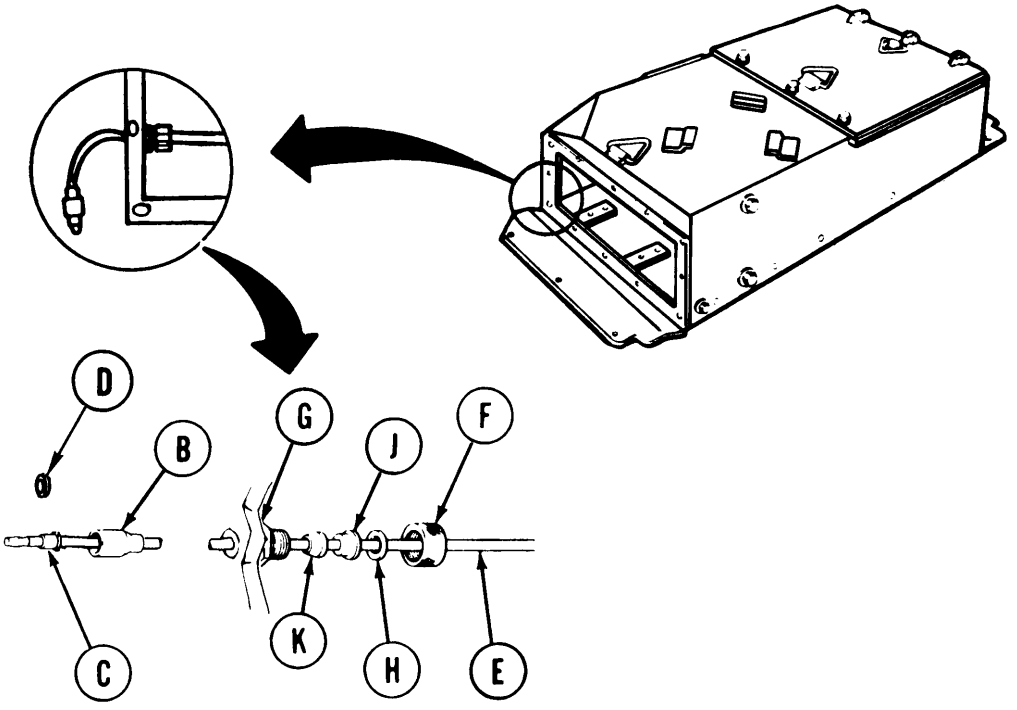

2. Remove centrifugal fan nearest power lead (page 7-118).

3. Push shell (B) back away from contact (C).

4. Using pliers, remove washer (D) from lead (E).

5. Remove shell (B).

6. Using pliers and wrench loosen and back off nut (F).

7. Pull lead (E) out of adapter (G). When lead is pulled, washers (H), (J), and gasket (K) will also be pulled out.

8. Remove lead (E). Remove washers (H), (J), gasket (K), and nut (F) from lead (E). Throw gasket away.

9. Inspect all remaining parts for defects or deterioration. Replace as necessary.

Go on to Sheet 3

TA248205

AIR CLEANER (ALUMINUM) CENTRIFUGAL FAN POWER LEAD REPLACEMENT (Sheet 3 of 4)

INSTALLATION:

1. Push shell (A) back away from contact (B).
2. Remove washer (C) from lead (D). Remove shell (A).
3. Install the following parts onto lead (D): nut (E), washer (F), washer (G), and new gasket (H).

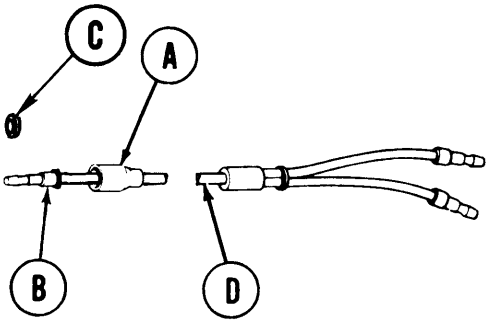

4. Install lead (D) through adapter (J). Pull approximately 10 inches of lead out of adapter.
5. Install shell (A) over end of lead and install washer (C).
6. Pull shell (A) toward end until it is stopped by washer.
7. Push gasket (H) and washers (G and F) down in adapter (J).
8. Thread nut (E) onto adapter (J). Using pliers, tighten nut.
9. Install centrifugal fan (page 7-122).

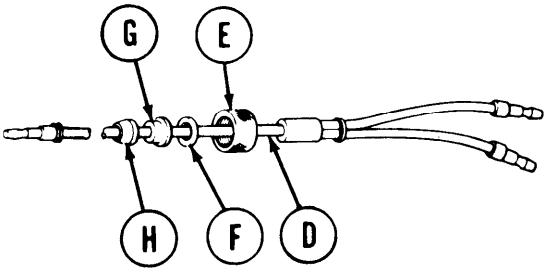

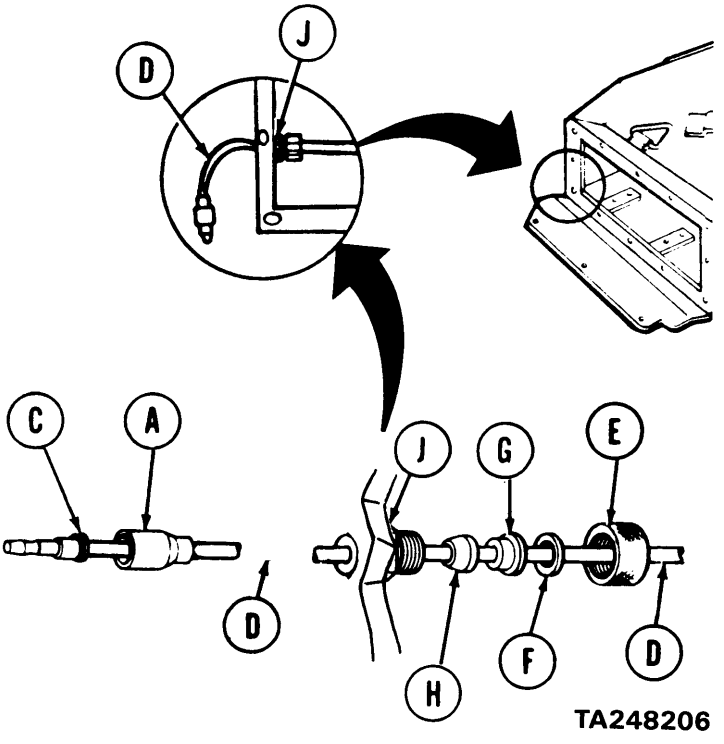

Go on to Sheet 4

AIR CLEANER (ALUMINUM) CENTRIFUGAL FAN POWER LEAD REPLACEMENT (Sheet 4 of 4)

9. Install air cleaner centrifugal fan cover (page 7-108).
10. Connect electrical connector (K).
11. Check operation of air cleaner (TM 5-5420-202-10).
12. Close top deck grille doors (TM 5-5420-202-10).

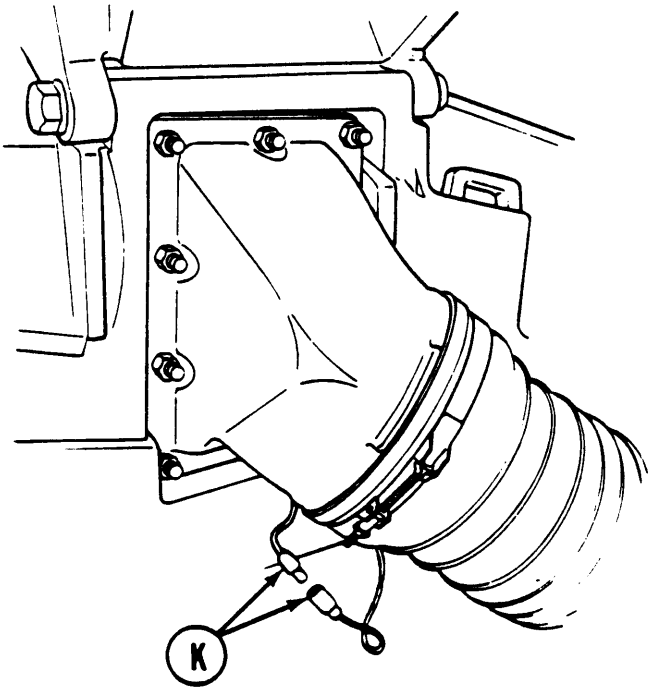

End of Task

TA248207

AIR CLEANER OUTLET HOSE ASSEMBLY REPLACEMENT (Sheet 1 of 3)

PROCEDURE INDEX

PROCEDURE	PAGE
Removal	7-84
Installation	7-85

TOOLS: 7/16 in. deepwell socket, 3/8 in. drive
Knife, pocket
Ratchet, 3/8 in. drive
Wrench, torque, 3/8 in. drive, 0 to 200 lb in.

SUPPLIES: Packing, preformed (2 required)
Adhesive (Item 4, Appendix D)
Rag, wiping (Item 65, Appendix D)

REFERENCE: TM 5-5420-202-10

PRELIMINARY PROCEDURE: Open top deck grille doors (TM 5-5420-202-10)

NOTE

Replacement of left and right side air cleaner outlet hose assemblies is the same. Left side shown.

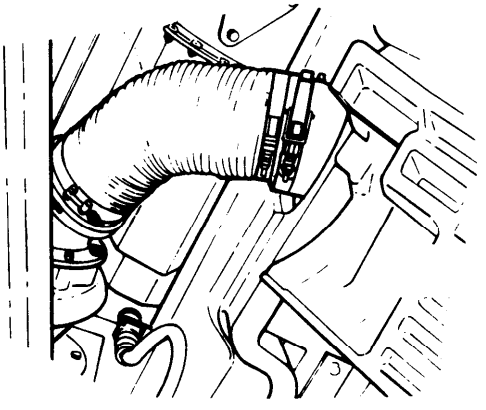

REMOVAL:

CAUTION

Do not open top deck doors when air cleaner door assembly is open. Damage to air cleaner door may result.

Go on to Sheet 2

AIR CLEANER OUTLET HOSE ASSEMBLY REPLACEMENT (Sheet 2 of 3)

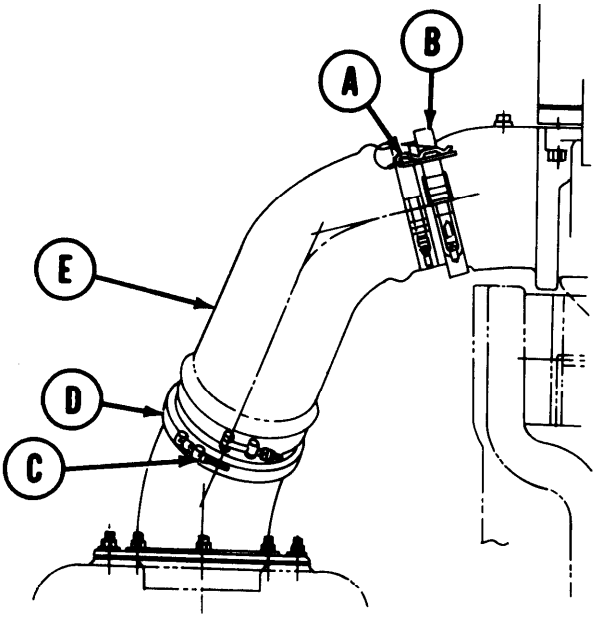

1. Pull pin (A) and release quick release clamp (B).
2. Remove quick release clamp (B) from hose and elbow.
3. Using socket, loosen nut (C) securing clamp (D).
4. Remove hose assembly (E).
5. Remove clamp (D).
6. Cover air cleaner outlet elbow and turbosupercharger inlet elbow with rags to prevent entrance of foreign matter.
7. Inspect hose assembly (E) for damage or defective parts. Replace hose assembly if hose or flange is unserviceable.
8. If hose (F) is serviceable, remove preformed packings (G) from ends of hose assembly flanges. Throw packings away. Using knife, clean old adhesive from grooves in flanges.

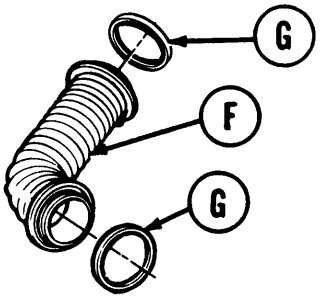

INSTALLATION:

NOTE

If installing new hose assembly, skip steps 1 and 2.

1. Apply adhesive (Item 4, Appendix D) to grooves in flanges in hose (A).
2. Install new preformed packings (B) into grooves in flanges.

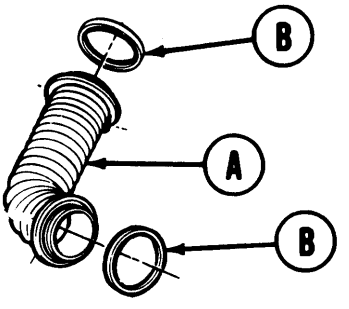

Go on to Sheet 3

AIR CLEANER OUTLET HOSE ASSEMBLY REPLACEMENT (Sheet 3 of 3)

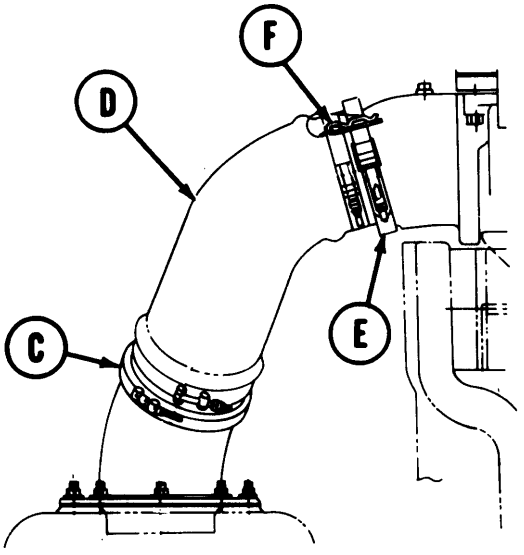

3. Put clamp (C) on turbosupercharger elbow flange.

4. Position hose assembly (D) between air cleaner outlet elbow and turbosupercharger inlet elbow.

5. Aline hose flange to turbosupercharger elbow flange. Position clamp (C) on hose assembly (D) and hand tighten clamp nut.

6. Aline hose flange to air cleaner outlet elbow and install clamp (E).

7. Engage “T” bolts to hasp on clamp (E) and close clamp handle.

8. Install pin (F) to secure clamp handle.

9. Using socket, tighten adjusting nut (G) on clamp (E) to eliminate clearance between hasp and “T” bolt. Turn nut one additional turn.

10. Using socket and torque wrench, tighten nut of clamp (D) to 25 to 35 lb-in (3 to 4 NŽm).

11. Close top deck door assemblies (TM 5-5420-202-10).

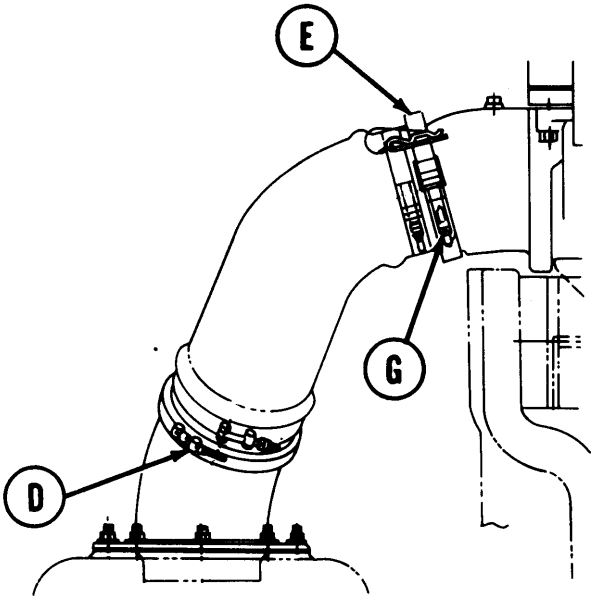

AIR CLEANER RESTRICTION INDICATOR (LEFT AND RIGHT) REPLACEMENT (Sheet 1 of 1)

TOOLS: 7/16 in. combination box and open end wrench
Slip joint pliers

REFERENCE: TM 5-5420-202-10

NOTE

Replacement of restriction indicator is the same for all air cleaners. Armored air cleaner is shown.

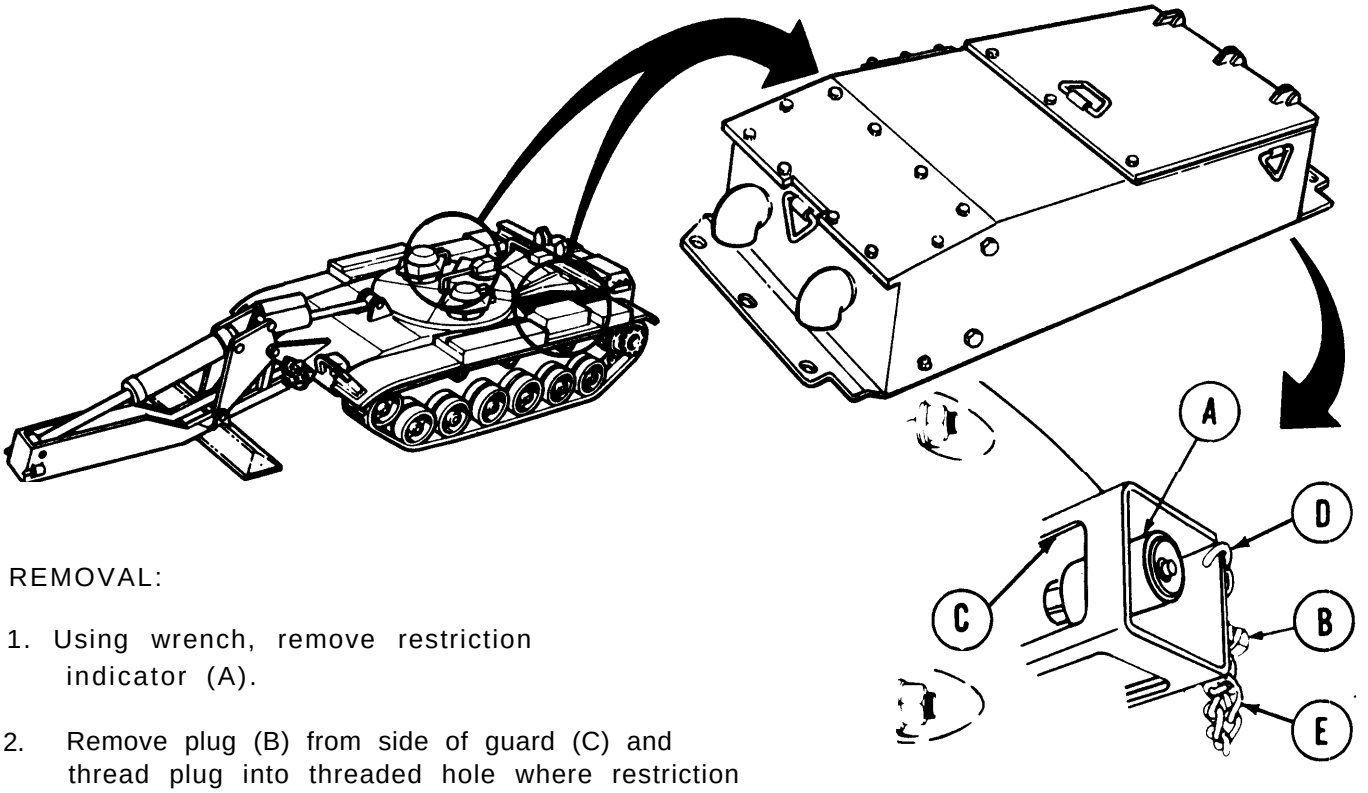

REMOVAL:

1. Using wrench, remove restriction indicator (A).
2. Remove plug (B) from side of guard (C) and thread plug into threaded hole where restriction indicator was.
3. Using pliers, open hooks (D) and replace hooks (D), chain (E), or plug (B), as necessary.

INSTALLATION:

1. Remove plug (B) from restriction indicator mounting hole.
2. Install restriction indicator (A). Using wrench, tighten restriction indicator.
3. Thread plug (B) into threaded hole on side of guard (C).
4. Check indicator for operation (TM 5-5420-202-10).

End of Task

TA248211

AIR CLEANER REPLACEMENT (Sheet 1 of 8)

PROCEDURE INDEX

PROCEDURE	PAGE
Removal	7-88
Installation	7-92

TOOLS: 3/8 in. combination box and open end wrench
9/16 in. combination box and open end wrench
5/8 in. combination box and open end wrench
9/16 in. socket with 1/2in. drive
5/8 in. socket with 1/2 in. drive
10 in. extension with 1/2 in. drive
15/16 in. combination box and open end wrench
15/16 in. socket with 1/2 in. drive
Flat-tip screwdriver
Torque wrench with 1/2 in. drive (0-175 lb-ft)
Oil Can
Ratchet with 1/2 in. drive
Hinged handle breaker bar with 1/2 in. drive
Multi-leg sling
Hoist

PERSONNEL: Three

SUPPLIES: Silicone compound (Item 32, Appendix D)
Covers (for turbocharger hose)
Locking compound (Item 18, Appendix D)
Primer paint (Item 50, Appendix D)

REFERENCE: TM 5-5420-202-10

PRELIMINARY PROCEDURES: Open top grille doors (TM 5-5420-202-10)

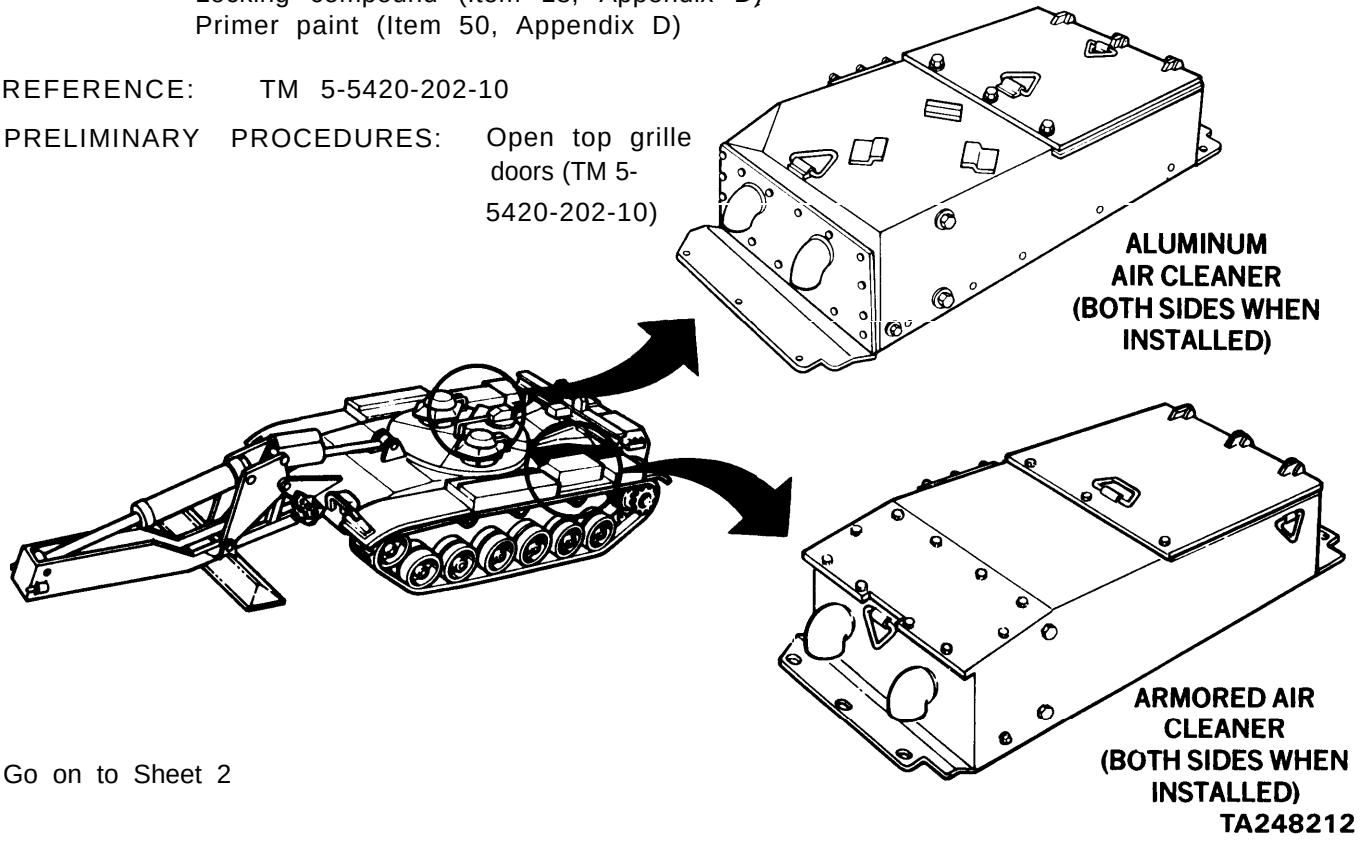

Go on to Sheet 2

AIR CLEANER REPLACEMENT (Sheet 2 of 8)

REMOVAL:

NOTE

The M60A1 AVLB may have either armored or aluminum top loading air cleaners.

1. Using 3/8 inch wrench, loosen clamp (A) nut securing inlet hose (B) to inlet elbow (c).

2. Separate hose (B) far enough from inlet elbow (C) to allow air cleaner to be removed without pulling hose.

3. Pull air cleaner electrical lead (D) from harness connector (E).

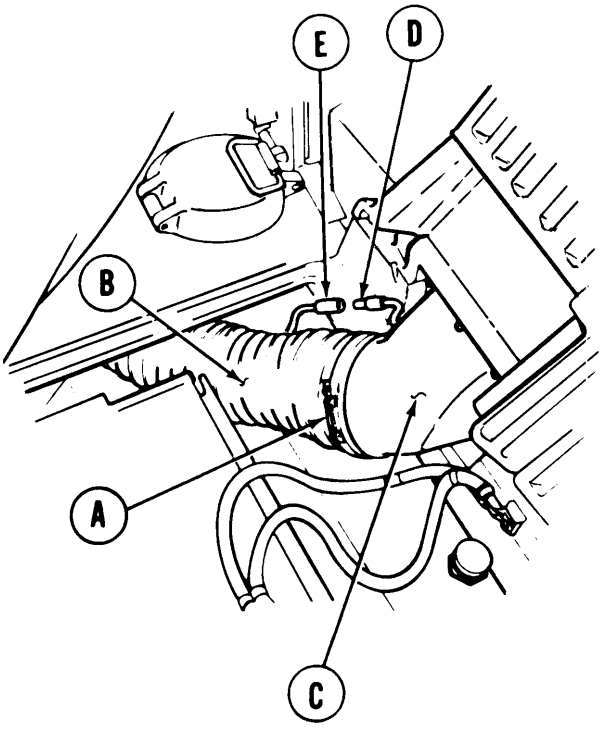

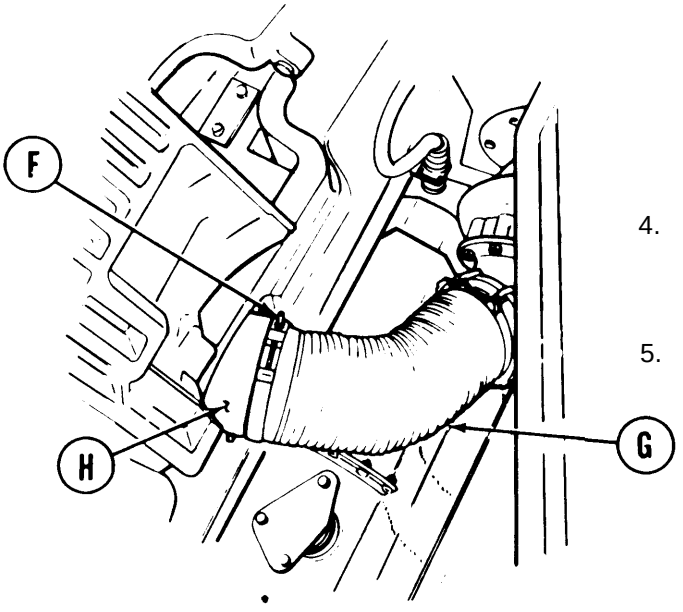

4. Using screwdriver, loosen clamp (F) securing air cleaner outlet hose (G) to air cleaner elbow (H).

5. Disconnect hose from air cleaner elbow (H). Cover hose (G). Close top deck grille door (TM 5-5420-202-10).

Go on to Sheet 3

TA248213

AIR CLEANER REPLACEMENT (Sheet 3 of 8)

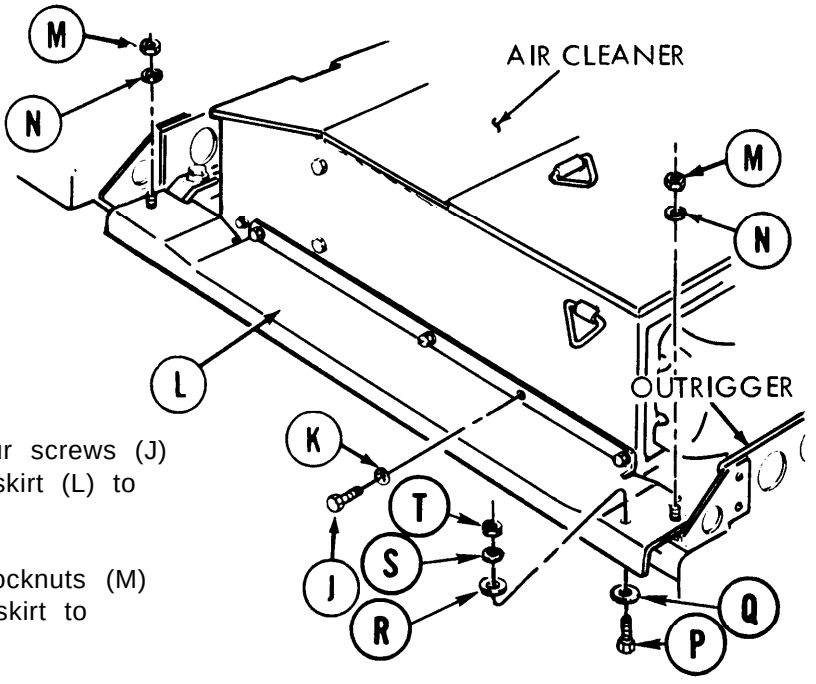

6. Using 5/8 inch socket, remove four screws (J) and washers (K) securing fender skirt (L) to air cleaner.

7. Using 9/16 inch socket, remove locknuts (M) and washers (N) securing fender skirt to both outriggers.

8. Using 9/16 inch socket, remove bolt (P), washer (Q), washer (R), lockwasher (S), and nut (T) securing fender skirt. Remove fender skirt (L).

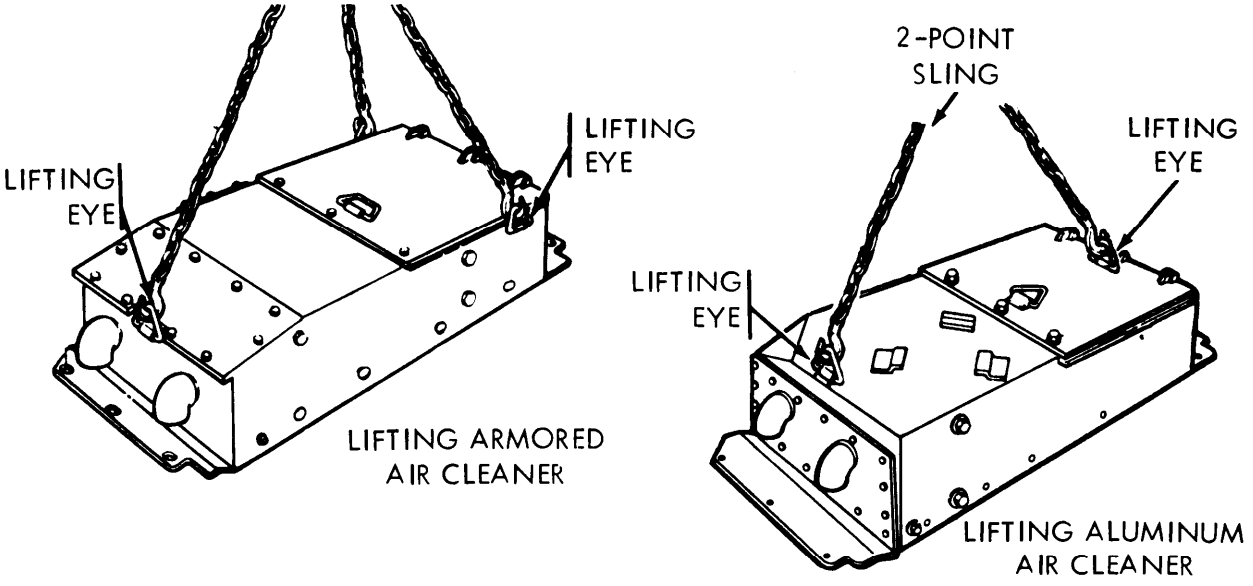

NOTE

On armored air cleaners, attach three-point sling and hoist to three lifting eyes. On aluminum air cleaners, attach two-point sling to two lifting eyes. Take up slack on sling.

Go on to Sheet 4

TA248214

AIR CLEANER REPLACEMENT (Sheet 4 of 8)

NOTE

If removing armored air cleaner, proceed to step 10. If removing aluminum air cleaner, proceed to step 9.

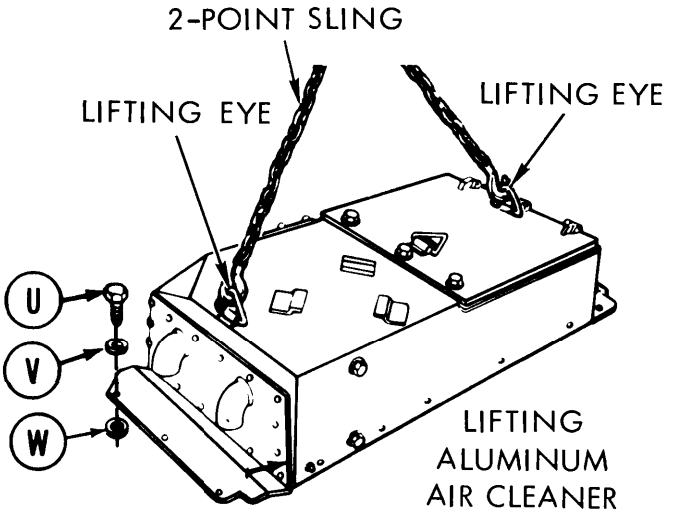

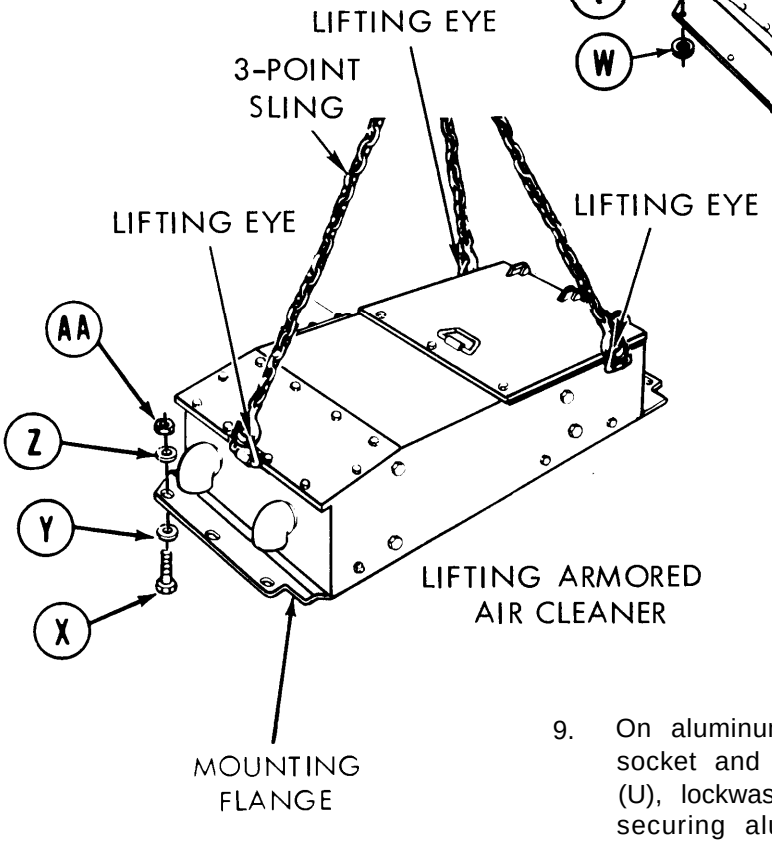

9. On aluminum air cleaner, using 9/16 inch socket and hinged handle, remove six screws (U), lockwashers (V), and washers (W) securing aluminum air cleaner.

10. On armored air cleaner, using 15/16 inch socket to hold nut and 15/16 inch wrench to hold bolt, remove six bolts (X), washers (Y), washers (Z), and nuts (AA) securing armored air cleaner.

11. On armored air cleaners, attach three-point sling and hoist to three lifting eyes. On aluminum air cleaners, attach two-point sling to two lifting eyes. Take up slack on sling.

12. Have two persons guide air cleaner and lift it off vehicle.

Go on to Sheet 5

AIR CLEANER REPLACEMENT (Sheet 5 of 8)

INSTALLATION:

NOTE

Clean all dirt and debris from mounting area before installing air cleaner.

1. Using multi-leg sling and hoist to install armored or aluminum air cleaner, lift air cleaner to mounting place on vehicle.

NOTE

It may be necessary to open top deck grille doors while guiding air cleaner into place. Close doors after air cleaner is positioned.

2. Have two persons guide air cleaner into mounting place. Make sure electrical lead goes through hull access opening.

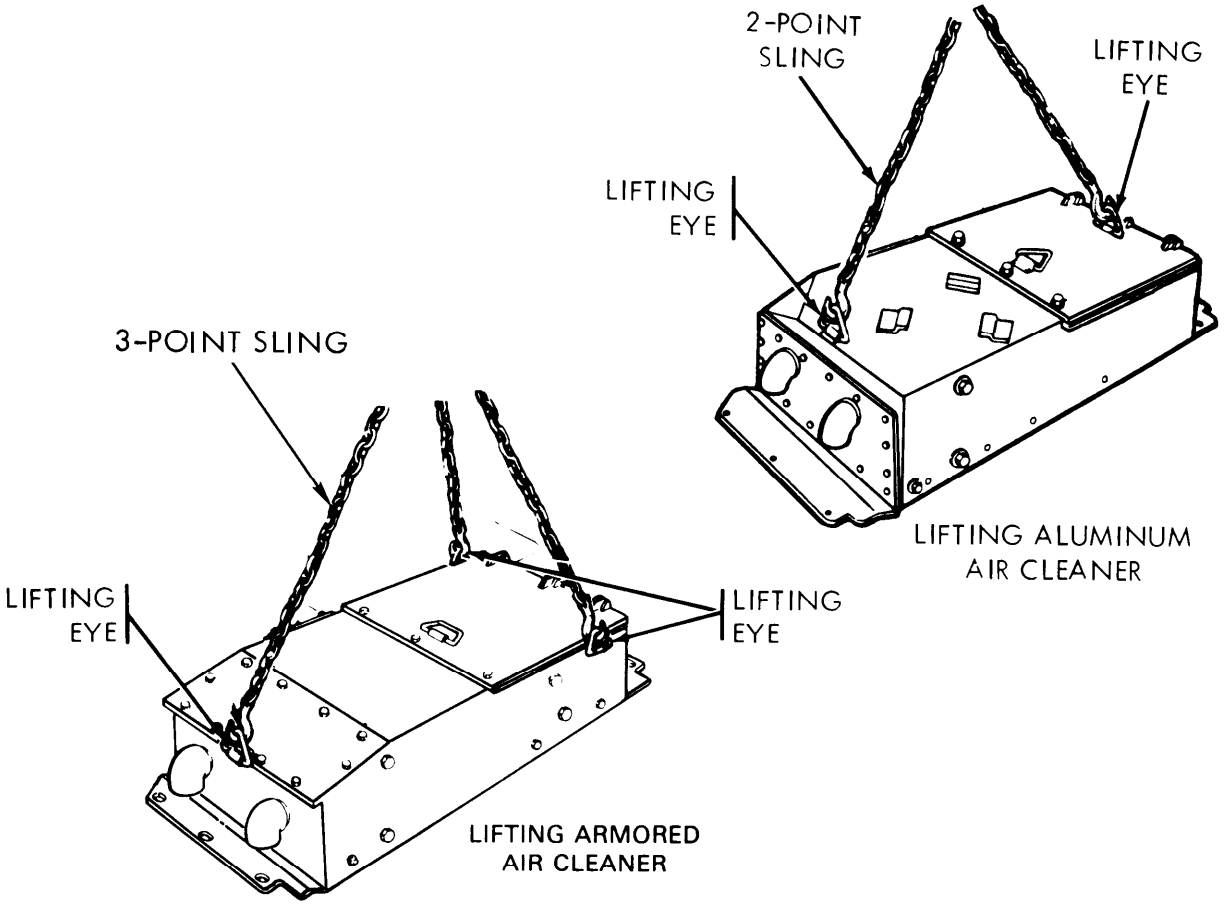

Go on to Sheet 6

TA248216

AIR CLEANER REPLACEMENT (Sheet 6 of 8)

NOTE

If you are installing an aluminum air cleaner, do steps 3, 4, 5, and 6, then go to steps 10 and 11. If you are installing an armored air cleaner, go to step 7.

3. Before installing aluminum air cleaner, apply primer and locking compound to screw threads, lockwashers, and washers.

4. Using 9/16 inch socket, install six screws (A), lockwashers (B), and washers (C) to secure air cleaner to vehicle. Do not overtighten (screws must be torqued in following step).

5. Using 9/16 inch socket, torque wrench, and extension, tighten six screws (A) to 22 to 30 lb-ft (28 to 47 N m).

6. If gap shows between air cleaner mounting flange and outrigger fender, remove screws and use washers (C) to fill gap and perform step 4 again.

NOTE

Use up to three washers (C) (as shims) for each bolt, if necessary, to fill gap.

7. Before stalling bolts and nuts to air cleaner, apply primer and locking compound to threads of nuts and bolts.

8. Using 15/16 inch socket, install six bolts (D), washers (E) and (F) and nuts (G).

9. Using torque wrench and 15/16 inch socket, tighten six bolts (D) 85 to 95 lb-ft (115 to 129 N m).

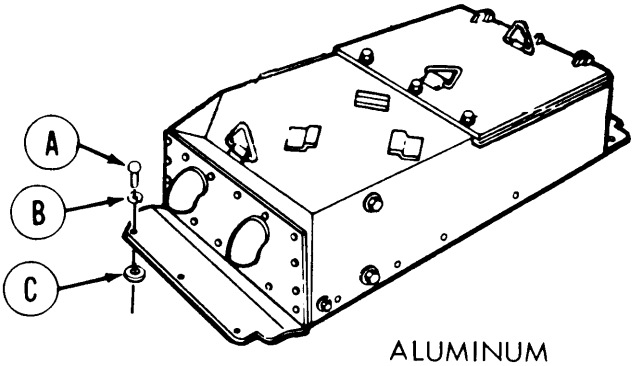

ALUMINUM AIR CLEANER

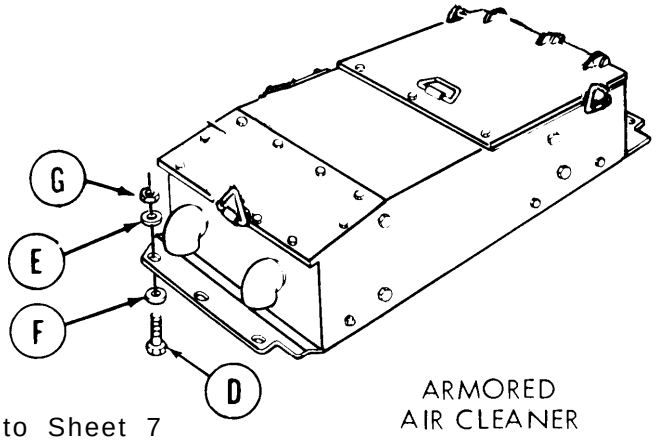

ARMORED AIR CLEANER

Go on to Sheet 7

TA248217

AIR CLEANER REPLACEMENT (Sheet 7 of 8)

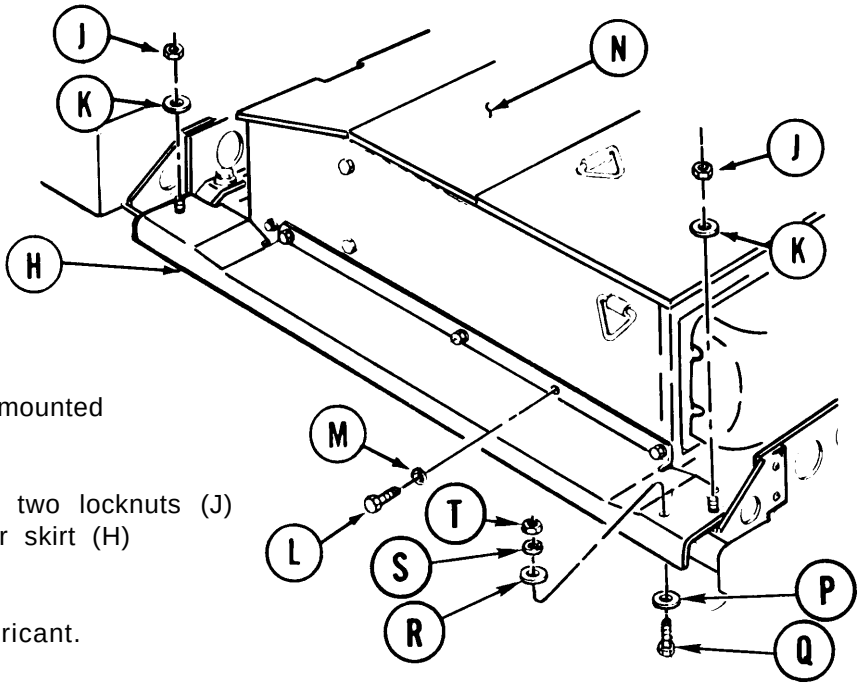

10. Place fender skirt (H) in the mounted position.

11. Using 9/16 inch socket, install two locknuts (J) and washers (K) to hold fender skirt (H) to both outriggers.

12. Coat four screws (L) with lubricant.

13. Using 5/8 inch socket, install four screws (L) and washers (M) to hold fender skirt (H) to air cleaner (N).

14. Using torque wrench and 5/8 inch socket, tighten four screws (L) to 20 to 30 lb-ft (27 to 41 N m).

15. Install washer (P) and bolt (Q) through the top of fender skirt (H).

16. Place washer (R), lockwasher (S), and nut (T) on bolt (Q). Using 9/16 inch socket on bolt (Q) and 9/16 inch wrench on nut (T), tighten nut (T).

Go on to Sheet 8

TA248218

AIR CLEANER REPLACEMENT (Sheet 8 of 8)

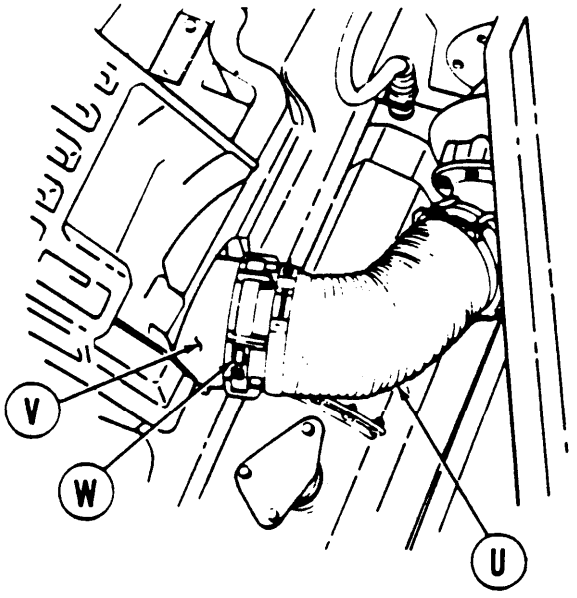

17. Open top deck grille doors (TM 5-5420-202-10) and remove cover from hose (U) opening.

18. Connect outlet hoses (U) to turbocharger air cleaner elbow (V).

19. Using screwdriver, tighten clamp (W) in place.

20. Coat electrical leads (X) and (Y) with silicone compound.

21. Connect air cleaner lead (X) to wiring harness lead (Y).

22. Remove hose cover and connect inlet hose (Z) to inlet elbow (AA).

23. Using 3/8 inch wrench, tighten clamp (AB) nut to inlet hose (Z) to elbow (AA).

24. Test air cleaner (TM 5-5420-202-10).

25. Close top deck grille doors (TM 5-5420-202-20-10).

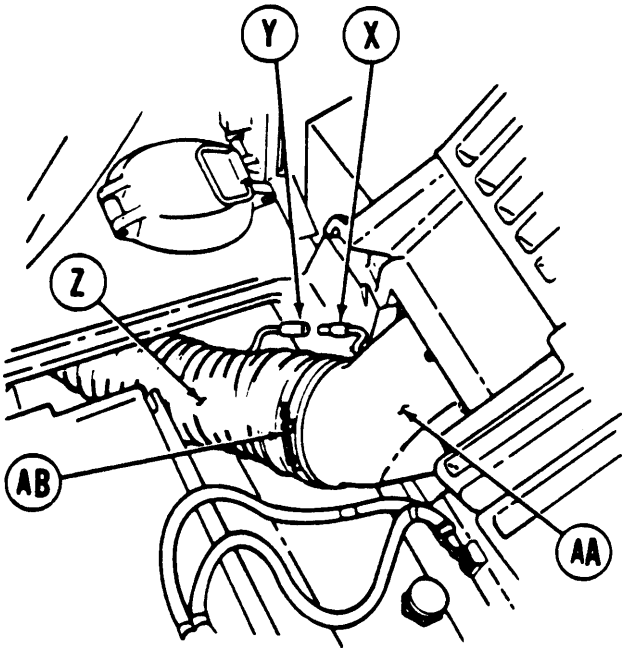

End of Task.

TA248219

AIR CLEANER FILTER ELEMENT CLEANING OR REPLACEMENT (Sheet 1 of 5)

PROCEDURE INDEX

PROCEDURE	PAGE
Removal	7-96
Inspection	7-98
Cleaning	7-98
Installation	7-99

TOOLS: 9/16 in. socket with 1/2 in. drive
Ratchet with 1/2 in. drive

SPECIAL TOOLS: V-Pack cleaner assembly (Item 5, Chapter 3, Section I)

SUPPLIES: Detergent (Item 33, Appendix D)
Rags (Item 65, Appendix D)
Leather gloves (Item 76, Appendix D)
Goggles (Item 70, Appendix D)
Face shield (Item 77, Appendix D)
Watch
Container for washing filter
90 psi air supply
Water
Extension light

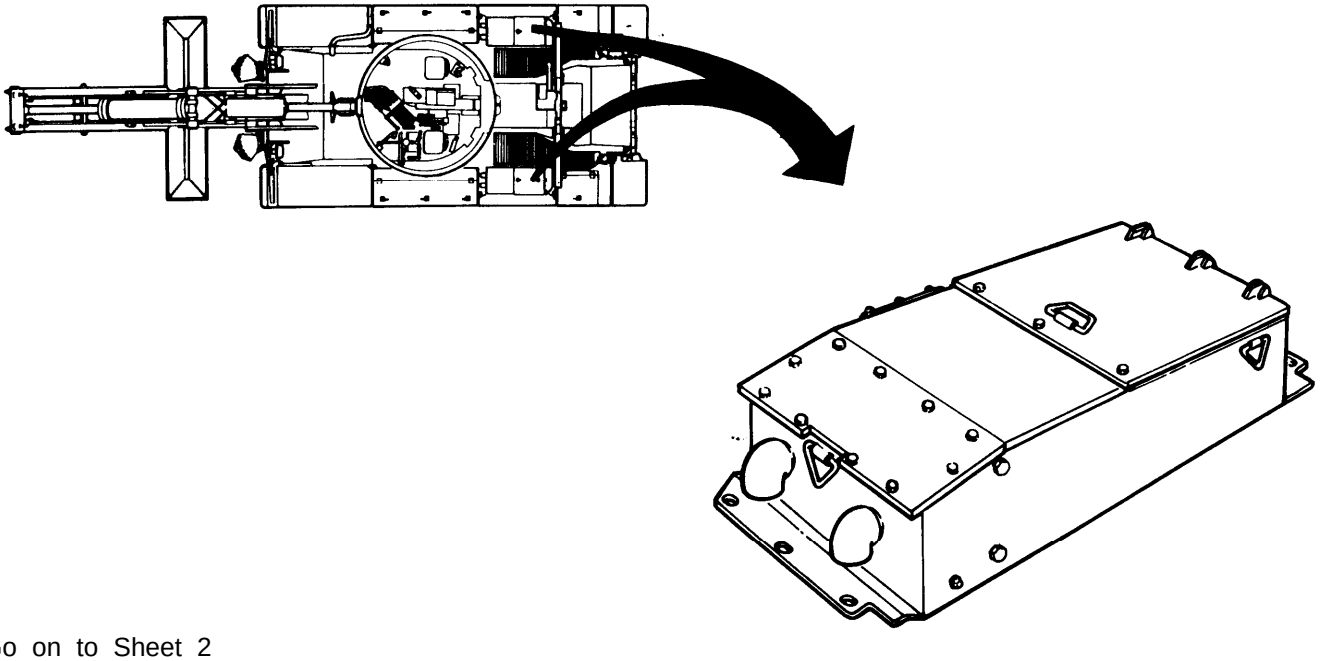

Go on to Sheet 2

AIR CLEANER FILTER ELEMENT CLEANING OR REPLACEMENT (Sheet 2 of 5)

REMOVAL:

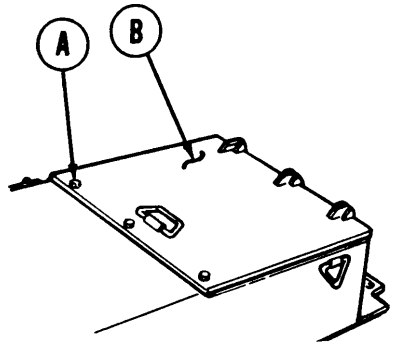

WARNING

Ž If NBC exposure is suspected, all air filter media should be handled by personnel wearing protective equipment. Consult your unit NBC Officer or NBC NCO for appropriate handling or disposal instructions.

Ž To prevent screws from pulling out of box and injuring personnel, a minimum of 200 pounds must be placed atop the door before attempting to remove screws.

1. Using socket, loosen three screws (A) and remove from door (B).

2. Open door (B) until it rests on rear fender box.

3. Inspect gasket on door (B). If damaged, replace (page 7-129).

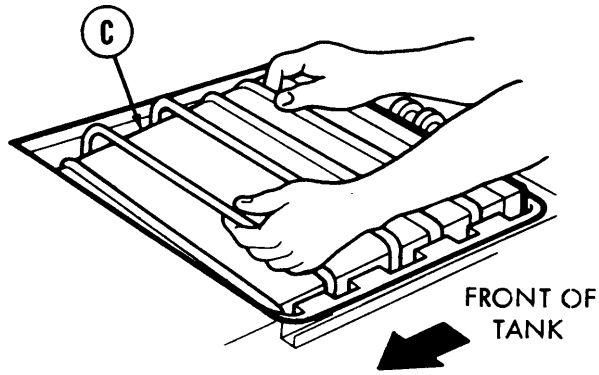

4. Slide filter element (C) toward front of tank.

5. Carefully lift filter element (C) out of air cleaner housing (D).

CAUTION

When removing filter element (C), use care not to damage filter seal (E). Do not stand filter element on seal end.

6. Close door (B) to keep out dust.

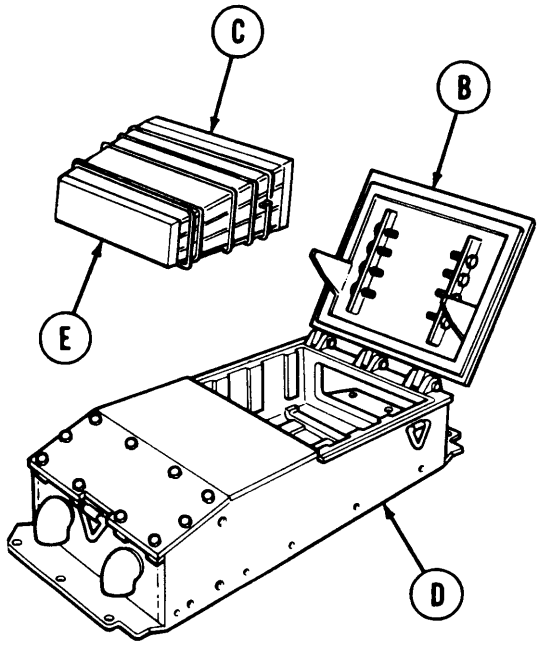

Go on to Sheet 3

AIR CLEANER FILTER ELEMENT CLEANING OR REPLACEMENT (Sheet 3 of 5)

INSPECTION:

1. Inspect filter element for rupture in filter material or damage or looseness of seal. Replace element if damaged in any way.

2. Inspect filter element to determine if contaminated with dust or oil. Element can be cleaned by using compressed air or by washing.

3. If filter is contaminated with dust, clean by using 90 psi compressed air.

4. If filter is contaminated with carbon or oil deposits, clean by washing.

CLEANING:

WARNING

Compressed air used for cleaning purposes will not exceed 90 psi. Use only with effective chip" guarding and personal protective equipment (goggles, face shield, gloves, long sleeves, etc.).

COMPRESSED AIR:

1. Using V-Pack cleaner assembly (Item 5, Chapter 3, Section I), direct stream of compressed air against inside of filter element.

2. Move air stream up and down length of pleats until no dust is visibly being blown out.

WASHING:

CAUTION

Do not hit element against solid object. Damage may occur to element.

1. Shake or blow off dust before wetting filter element.

2. Prepare solution of warm water (80°F to 110°F) (27°C to 43°C) and detergent in container large enough to hold filter element.

☆ U.S. GOVERNMENT PRINTING OFFICE: 1991 543-016/40064

Go on to Sheet 4

AIR CLEANER FILTER ELEMENT CLEANING OR REPLACEMENT (Sheet 4 of 5)

3. Soak filter element in cleaning solution for 15 to 20 minutes, then gently shake it back and forth for 2 to 3 minutes to free dirt deposits.

4. Rinse filter element with cool water (35°F to 80°F) (2°C to 27°C) until all traces of dirt and detergent are removed.

5. If hose is used to rinse filter element, maximum line pressure of 40 psi should be used.

CAUTION

Make sure filter element is completely dry before using. Inspect filter element after drying to be sure dust is not caked inside element.

6. Air dry at normal room temperature until filter element is completely dry. If circulating air is used, temperature must not exceed 180°F (82°C).

7. After cleaning, inspect filter element for damage to seal or ruptured filter material, place light inside filter element, and inspect from outside. If ruptured, replace with new filter element.

8. Use a clean, damp rag and wipe out filter compartment.

INSTALLATION:

CAUTION

Be careful when installing filter element not to damage filter seal.

1. Open door (A).

2. Install filter element (B) by lowering it to bottom of filter compartment (C).

3. Slide filter element (B) rearward to seal element in position.

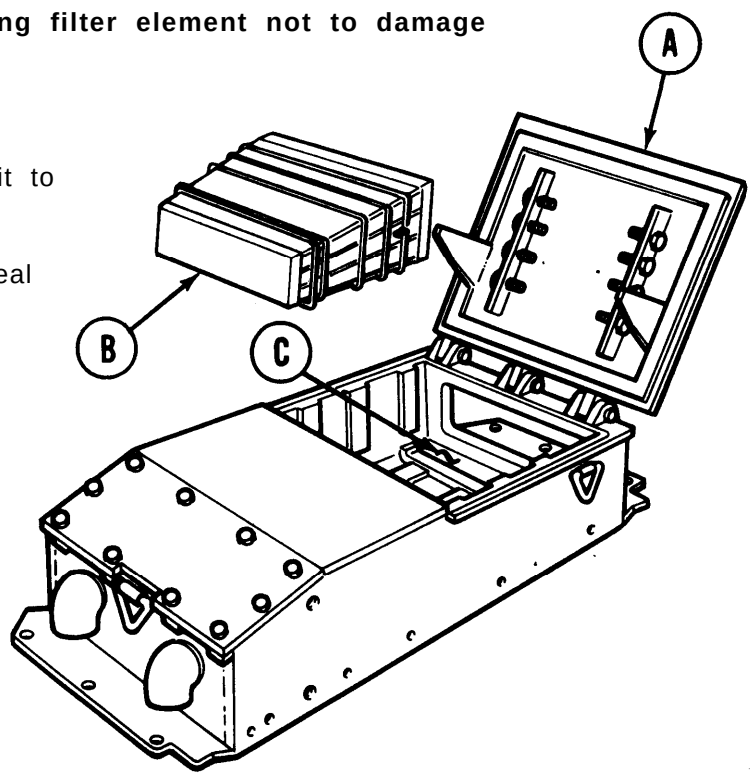

Go on to Sheet 5

AIR CLEANER FILTER ELEMENT CLEANING OR REPLACEMENT (Sheet 5 of 5)

4. Make sure that filter element (B) is properly positioned so that door arms (D) engage locking pins on sides of filter element.

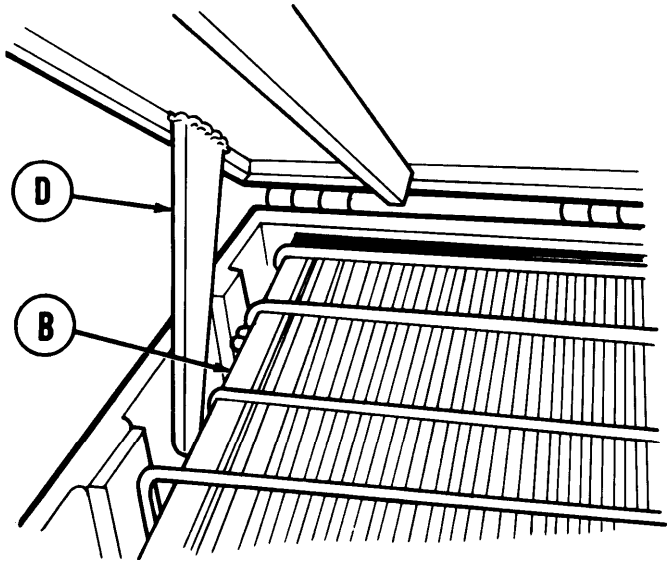

WARNING

To prevent screws from pulling out of box and injuring personnel, a minimum of 200 pounds must be placed atop the door before installing screws.

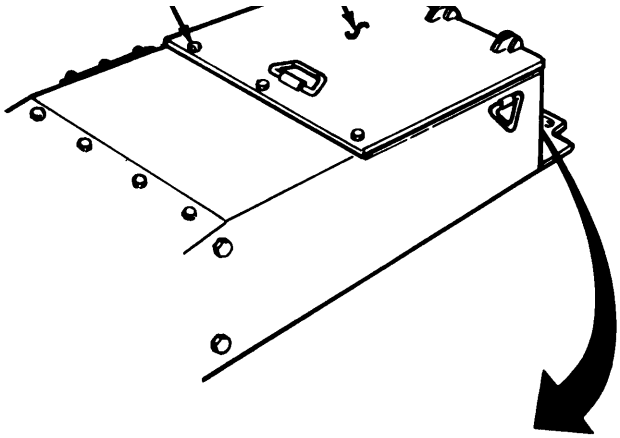

5. Close door (A) and, using socket, install screws (E).

6. Using socket, tighten screws (E) to secure door (A).

7. Press indicator reset button (F) to make sure indicator shows clear window.

8. Check operation of air cleaner (TM 5-5420-202-10).

End of Task

AIR CLEANER OUTLET ELBOW REPLACEMENT (Sheet 1 of 2)

TOOLS: 9/1 6 in. socket with 1/2 in. drive
Ratchet with 1/2 in. drive
Torque wrench with 1/2 in. drive
(0-175 lb-ft) (0-237 NŽm)
10 in. extension with 1/2 in. drive
Pry bar
9/16 in. combination box and open end wrench
Universal joint with 1/2 in. drive

SUPPLIES: Gasket
Self-locking nuts (14 required)

PRELIMINARY PROCEDURES: Remove air cleaner (page 7-88)
Remove restriction indicator (page 7-87)

NOTE

Removal of left or right outlet elbow is the same. Left side shown.

REMOVAL:

1. Using socket and wrench, remove 14 nuts (A).
2. Using pry bar, loosen elbow (B) from air cleaner.
3. Remove elbow (B) and gasket (C). Throw gasket away.
4. Inspect studs for damaged threads and for stamping of H on ends. If threads are damaged or ends are not stamped with H, replace studs.

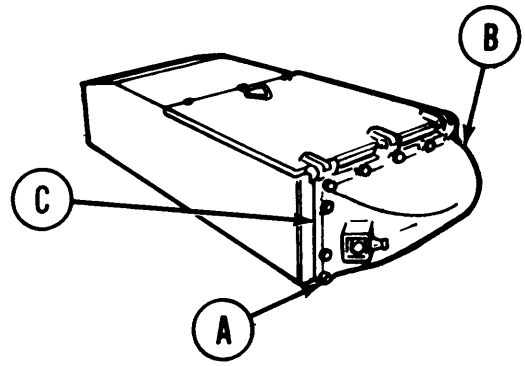

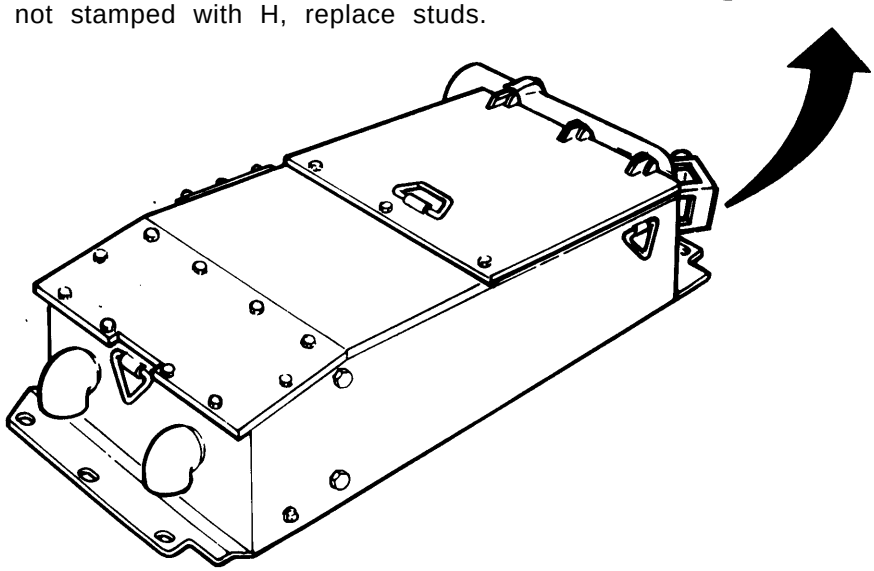

Go on to Sheet 2

AIR CLEANER OUTLET ELBOW REPLACEMENT (Sheet 2 of 2)

INSTALLATION :

1. Position new gasket (A) and elbow (B) onto studs on air cleaner.

2. Using socket, extension, and wrench, install 14 nuts (C) securing elbow (B) to air cleaner. Tighten nuts (C) to 35 lb-ft (47 NŽm) using sequence shown.

3. Repeat sequence tightening nuts (C) to 50 lb-ft (68 NŽm)

4. Install restriction indicator (page 7-87).

5. Install air cleaner (page 7-92).

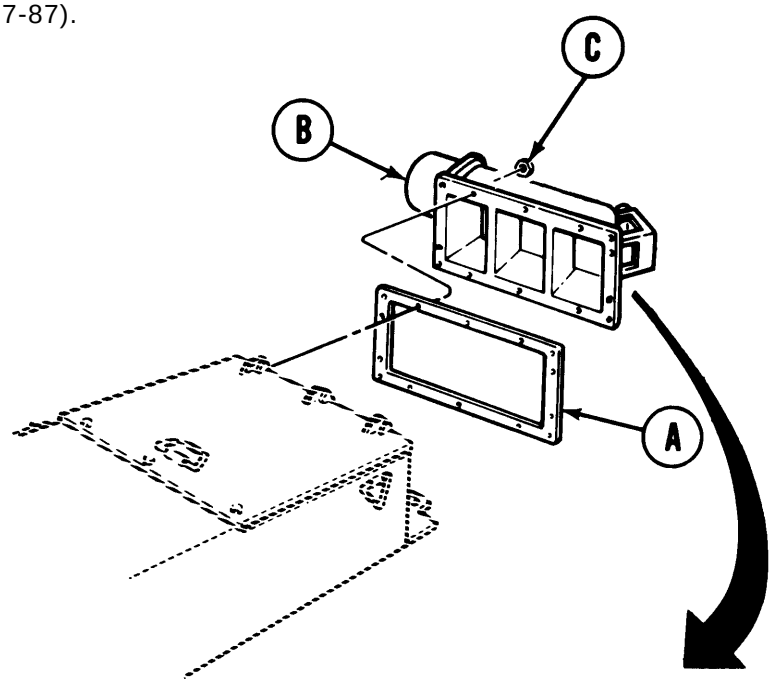

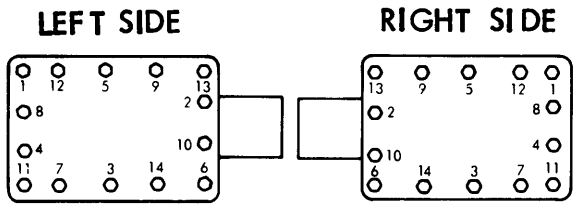

NUT-TIGHTENING SEQUENCE

End of Task

AIR CLEANER (ARMORED) CENTRIFUGAL FAN COVER AND GASKET REPLACEMENT (Sheet 1 of 3)

TOOLS: 1/2 in. socket with 1/2 in. drive
Ratchet with 1/2 in. drive
Cross-tip screwdriver

SUPPLIES: Sealing compound (Item 24, Appendix D)
Silicone compound (Item 32, Appendix D)
Gasket

REFERENCE: TM 5-5420-202-10

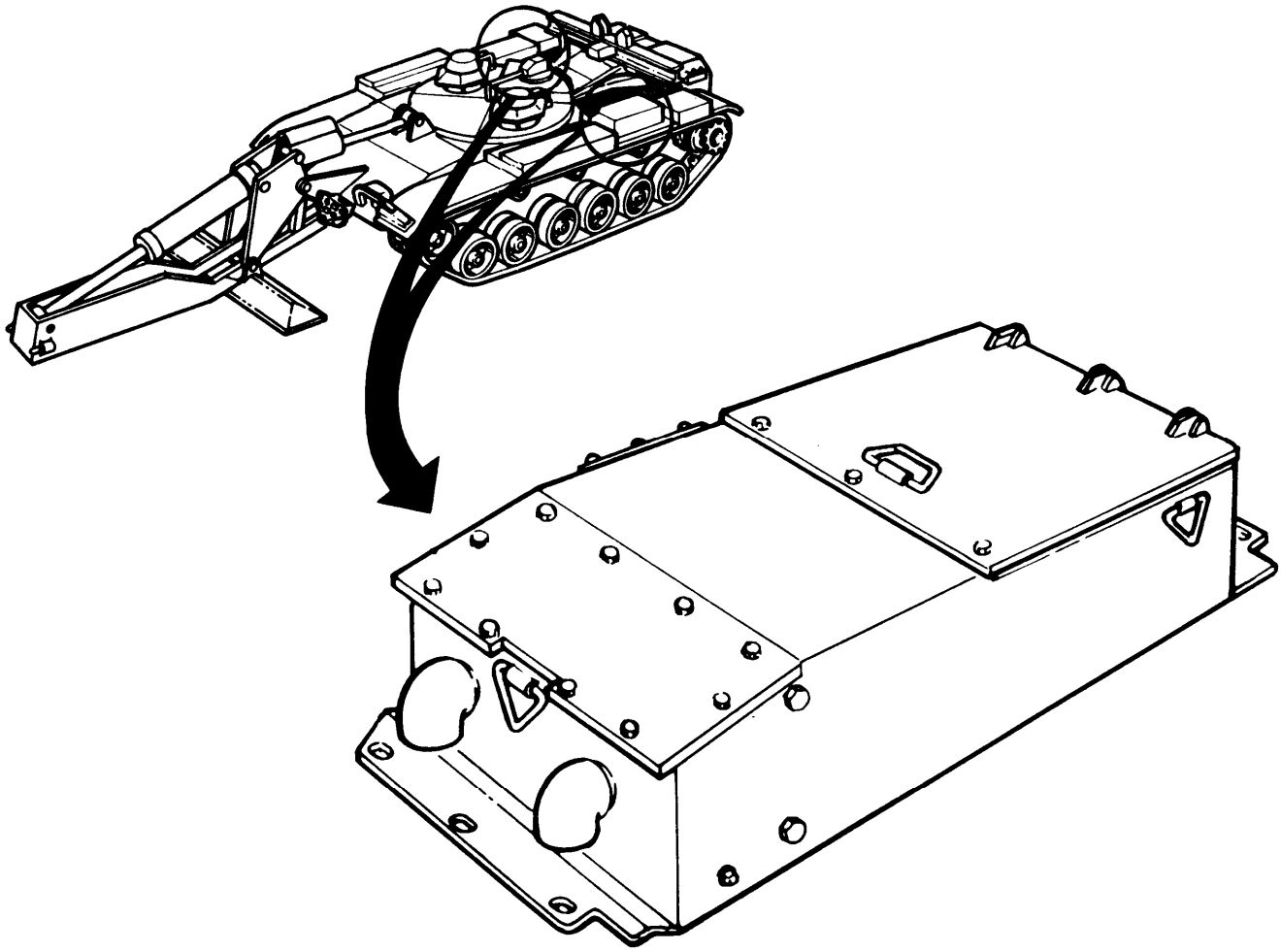

Go on to Sheet 2

TA248227

AIR CLEANER (ARMORED) CENTRIFUGAL FAN COVER AND GASKET REPLACEMENT (Sheet 2 of 3)

REMOVAL:

1. Using socket, remove 10 screws and lockwashers (A) securing cover (B).

2. Place cover (B) on top of housing (C).

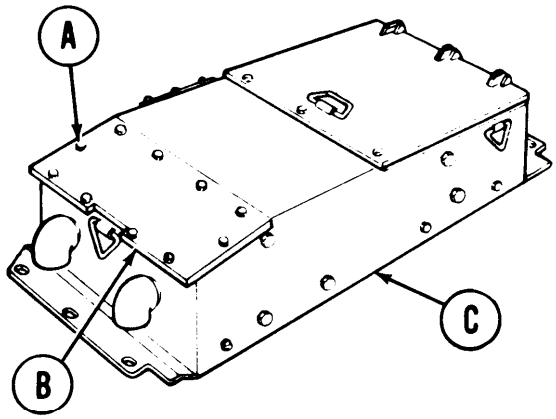

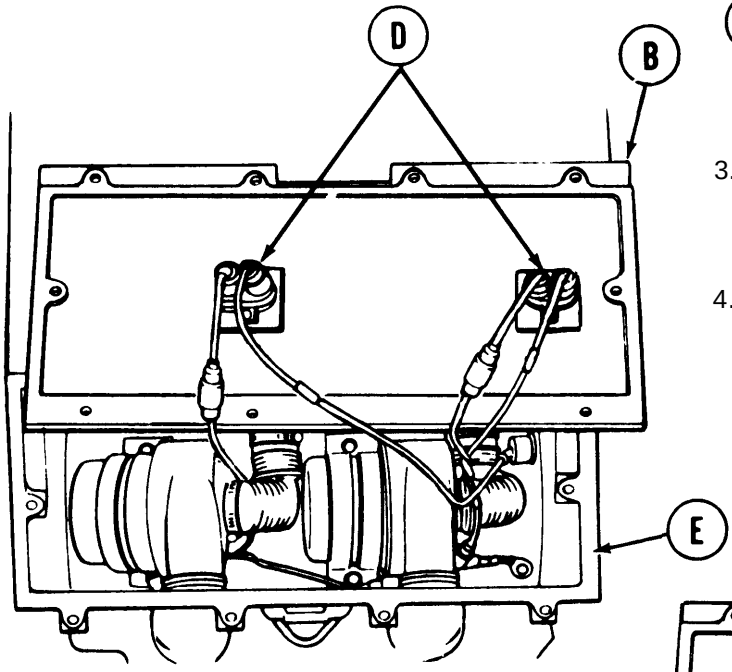

3. Disconnect four electrical leads from two circuit breakers (D) mounted to underside of cover (B).

4. Remove cover (B) and gasket (E). Throw gasket away.

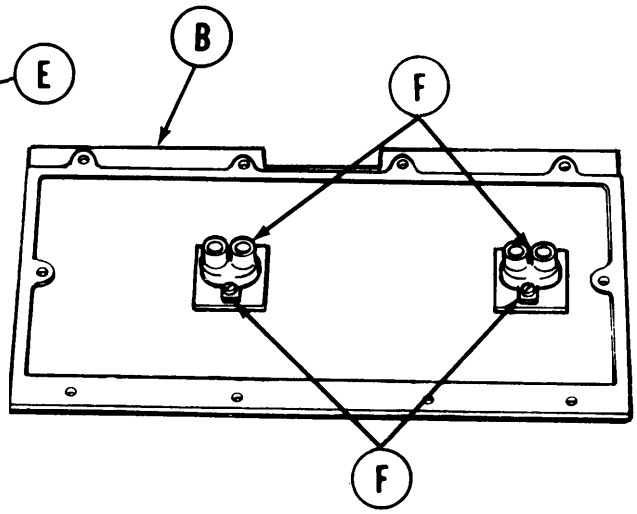

5. Using screwdriver, remove four screws and lockwashers (F) securing two circuit breakers to cover (B).

Go on to Sheet 3

TA248228

AIR CLEANER (ARMORED) CENTRIFUGAL FAN COVER AND GASKET REPLACEMENT (Sheet 3 of 3)

INSTALLATION:

1. Place two circuit breakers (A) in position on cover (B).

2. Using screwdriver, install four screws (C) securing circuit breaker (A) to cover (B).

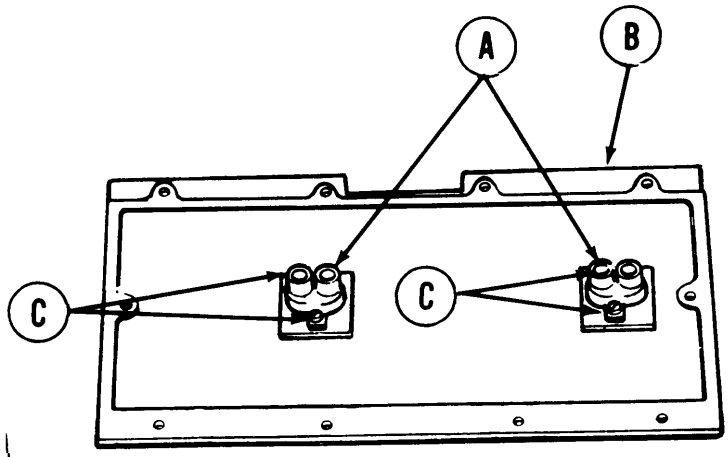

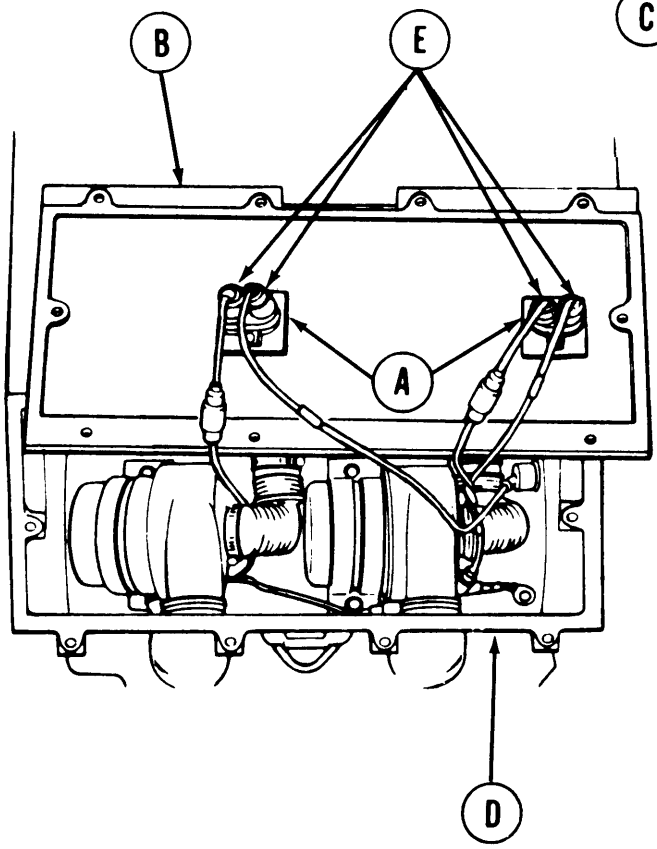

3. Apply sealing compound on new gasket (D) and place in position.

4. Apply silicone compound to four male leads (E).

5. Connect leads (E) to two circuit breakers (A).

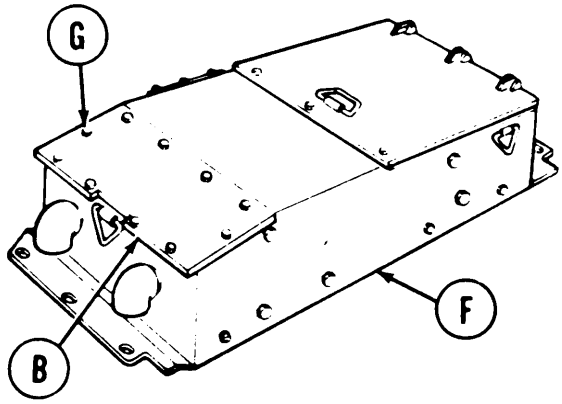

6. Place cover (B) in position on air cleaner (F).

7. Using socket, install ten screws and lockwashers (G).

End of Task

TA248229

AIR CLEANER (ALUMINUM) CENTRIFUGAL FAN COVER AND GASKET REPLACEMENT (Sheet 1 of 3)

TOOLS: 7/16 in. socket with 1/2 in. drive
7/16 in. combination box and open end wrench
Ratchet with 1/2 in. drive
Flat-tip screwdriver

SUPPLIES: Sealing compound (Item 24, Appendix D)
Gasket
Lockwashers (16 required)

REFERENCE: TM 5-5420-202-10

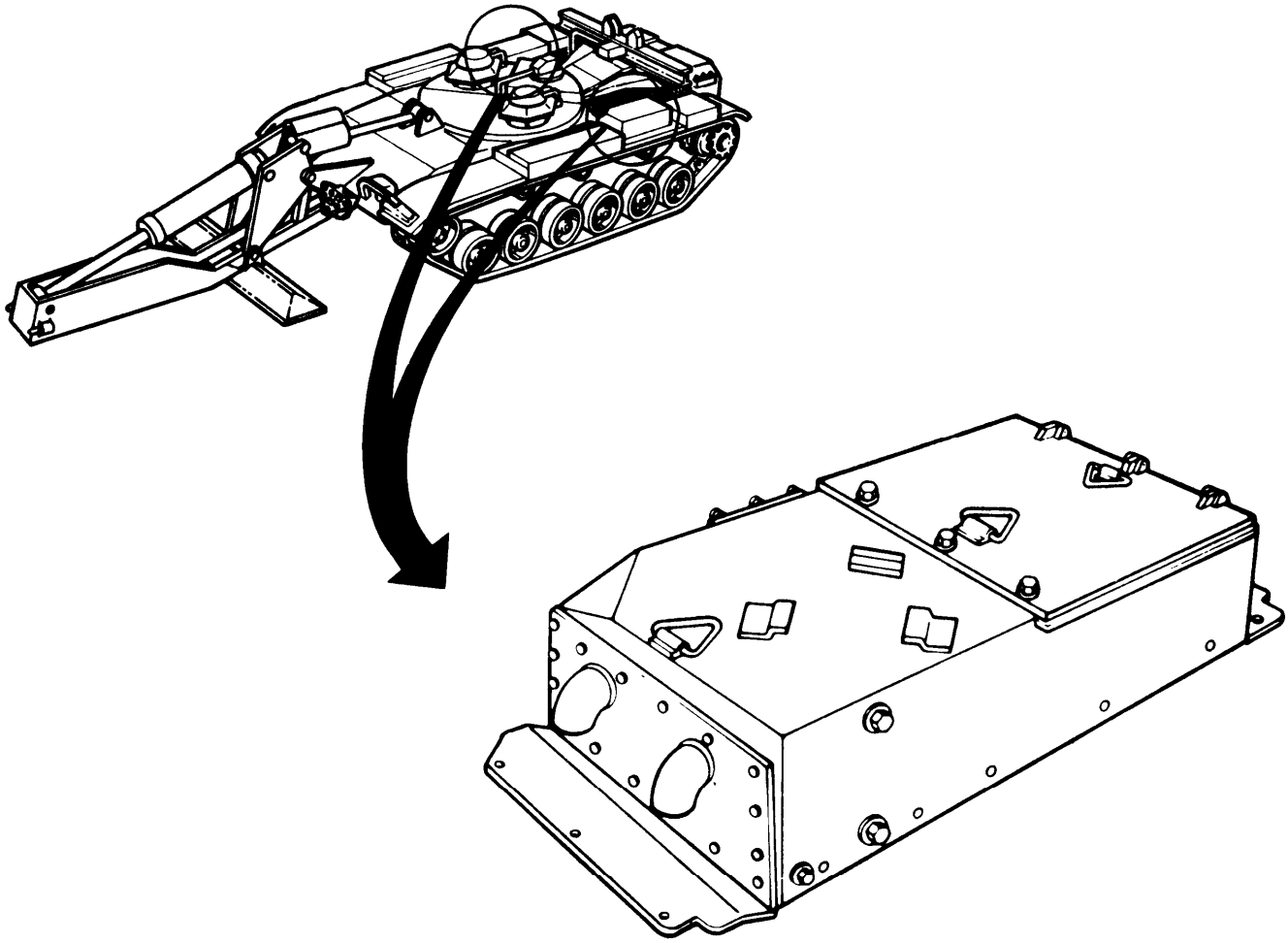

Go on to Sheet 2

TA248230

AIR CLEANER (ALUMINUM) CENTRIFUGAL FAN COVER AND GASKET REPLACEMENT (Sheet 2 of 3)

REMOVAL:

1. Using socket and wrench, remove 16 screws,, washers, and lockwashers (A).

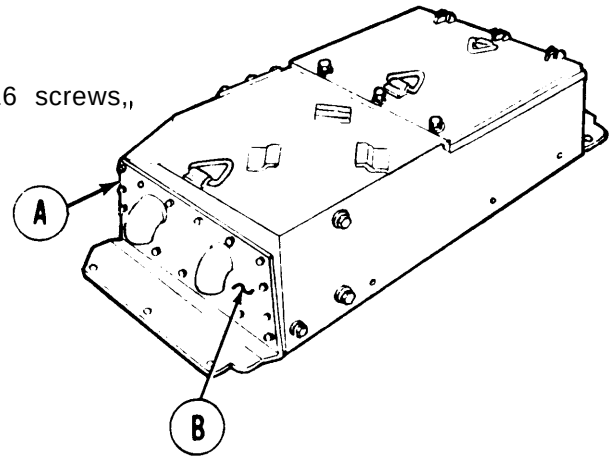

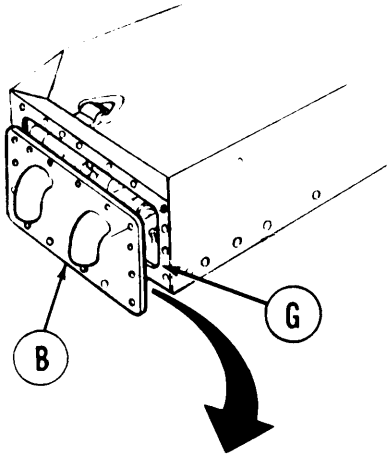

2. Pull cover (B) away from air cleaner housing just far enough to reach connectors (C).

3. Disconnect four connectors (C) from two circuit breakers (D) on cover (B). Remove cover (B) with circuit breakers (D).

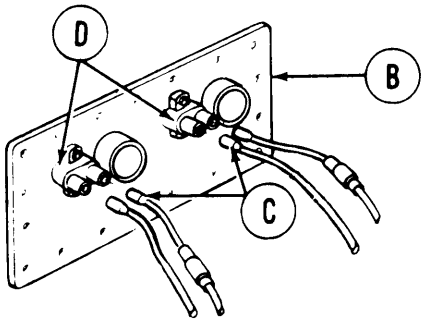

4. Using screwdriver, remove four screws (E) and washers (F) securing two circuit breakers (D) to cover (B).

5. Remove gasket (G) from cover (B). Throw gasket (G) away.

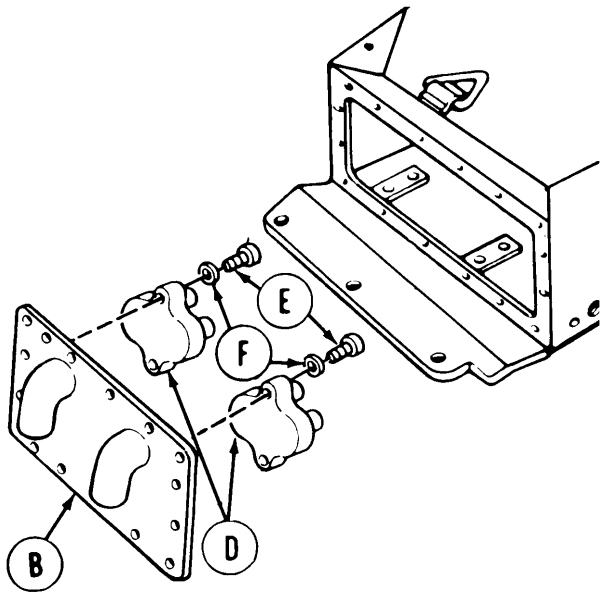

Go onto Sheet 3

TA248231

AIR CLEANER (ALUMINUM) CENTRIFUGAL FAN COVER AND GASKET REPLACEMENT (Sheet 3 of 3)

INSTALLATION:

1. Position two circuit breakers (A) onto cover (B).

2. Install washers (C) and screws (D) to secure circuit breakers (A) to cover (B). Using screwdriver, tighten screws (D).

3. Position new gasket (E) on housing with sealing compound.

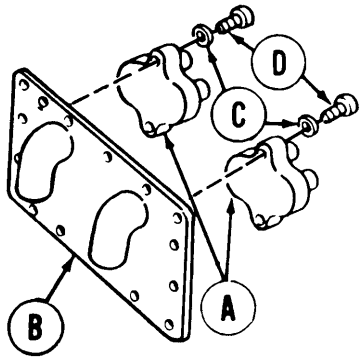

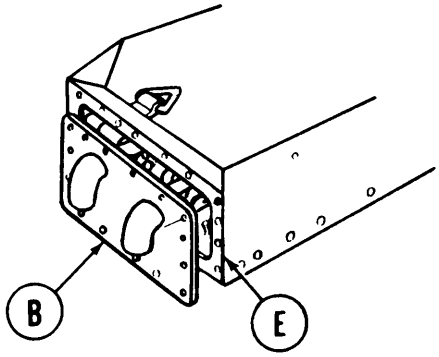

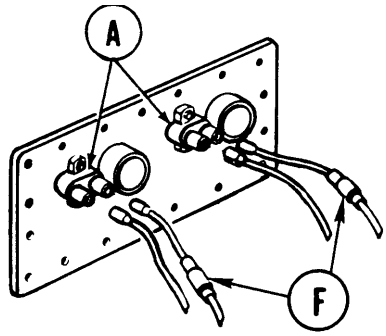

4. Position cover (B) in front of housing.

5. Connect lead with jumpers (F) from centrifugal fan to each circuit breaker (A).

6. Connect one connector from power lead to each circuit breaker (A). (Power lead is the one coming from side of housing.)

7. Check operation of air cleaner blower fan (TM 5-5420-202-10).

8. Position cover (B) to housing and install 16 screws (G) lockwashers (H), and flat washers (J) to secure cover.

9. Using socket and wrench, tighten screws (G).

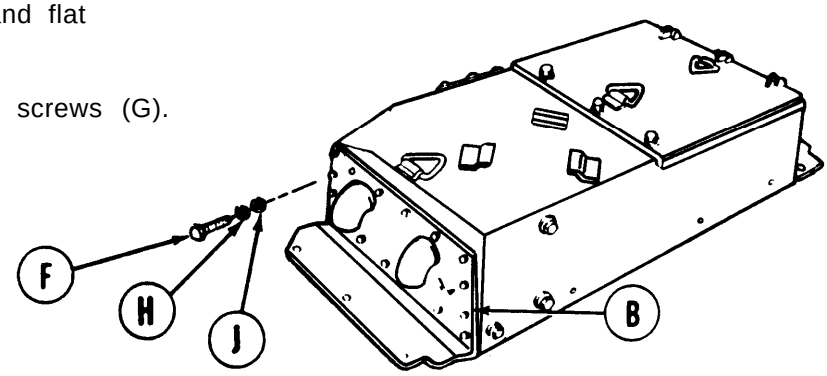

End of Task

TA248232

AIR CLEANER (ARMORED) CENTRIFUGAL FAN HOSE REPLACEMENT (Sheet 1 of 1)

TOOLS: 1/2 in. socket with 1/2 in. drive
Flat-tip screwdriver
Ratchet with 1/2 in. drive

SUPPLIES: Silicone compound (Item 32, Appendix D)

NOTE

Removal of left or right centrifugal fan hose is the same. Left side shown.

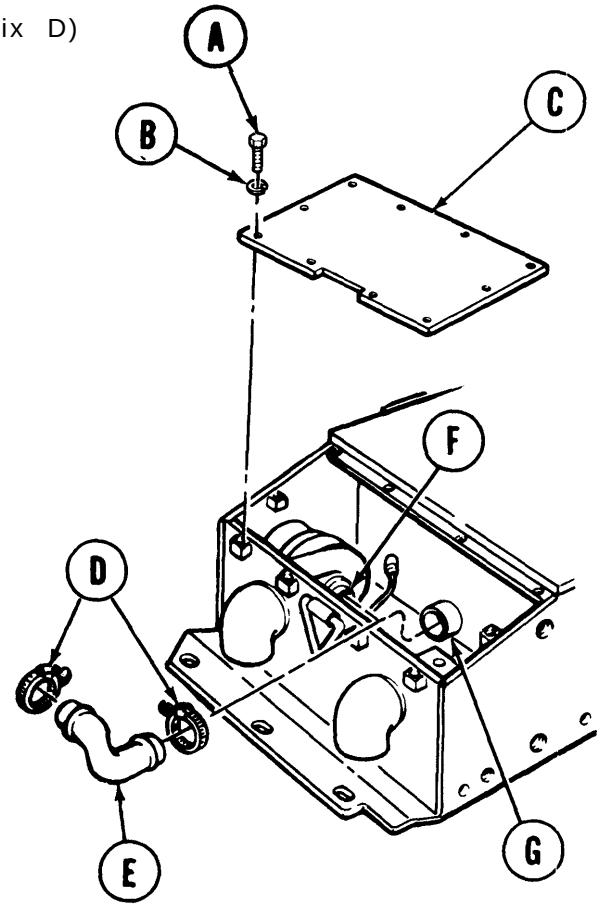

REMOVAL:

1. Using socket, remove 10 screws (A) and lockwashers (B) securing cover (C).
2. Using flat-tip screwdriver, loosen clamps (D).
3. Slide clamps (D) onto hose (E).
4. Remove hose (E) from centrifugal fan (F) and housing (G).
5. Inspect hose (E) and clamps (D). Replace as necessary.

INSTALLATION:

1. Position clamps (D) onto hose (E).
2. Coat inside diameter of hose ends with silicone compound and install hose (E) to centrifugal fan (F) and housing (G).
3. Slide clamps (D) to ends of hose. Use flat-tip screwdriver and tighten clamps (D).
4. Install cover (C) and secure with 10 screws (A) and lockwashers (B).
5. Using socket, tighten screws (A).

End of Task

TA248233

AIR CLEANER (ALUMINUM) CENTRIFUGAL FAN HOSE REPLACEMENT (Sheet 1 of 1)

TOOLS: Flat-tip screwdriver

SUPPLIES: Silicone compound (Item 32, Appendix D

PRELIMINARY PROCEDURES: Remove air cleaner cover and gasket (page 7-106)
Remove air cleaner centrifugal fan (page 7-118)

REMOVAL:

1. Using screwdriver, loosen two clamps (A).
2. Slide clamps (A) onto hose (B).
3. Remove hose (B) from centrifugal fan (C) and housing (D).
4. Inspect hose (B) and clamps (A). Replace as necessary.

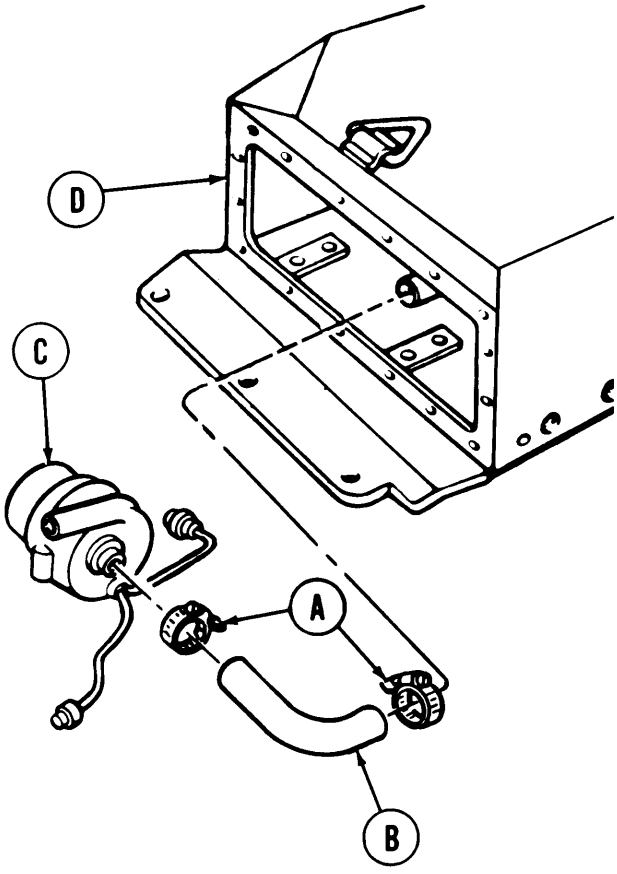

INSTALLATION:

1. Position clamps (A) onto hose (B).
2. Coat inside diameter of hose ends with silicone compound and install hose (B) to centrifugal fan (C) and housing (D).
3. Slide clamps (A) to ends of hose. Using screwdriver, tighten clamps (A).
4. Install air cleaner centrifugal fan (page 7-122).
5. Install air cleaner cover and gasket (page 7-108).

End of Task

TA248234

AIR CLEANER (ARMORED) CENTRIFUGAL FAN REPLACEMENT (Sheet 1 of 7)

PROCEDURE INDEX

PROCEDURE	PAGE
Removal	7-111
Inspection and Repair	7-113
Installation	7-114

TOOLS: 1/2 in. socket with 1/2 in. drive
10 in. extension with 1/2 in. drive
Ratchet with 1/2 in. drive
Flat-tip screwdriver
1/2 in. combination box and open end wrench.

SUPPLIES: Sealing compound (Item 24, Appendix D)
Silicone compound (Item 32, Appendix D)
Gasket

REFERENCE: TM 5-5420-202-10

NOTE

Removal of the left or right centrifugal fan is the same. Left side shown.

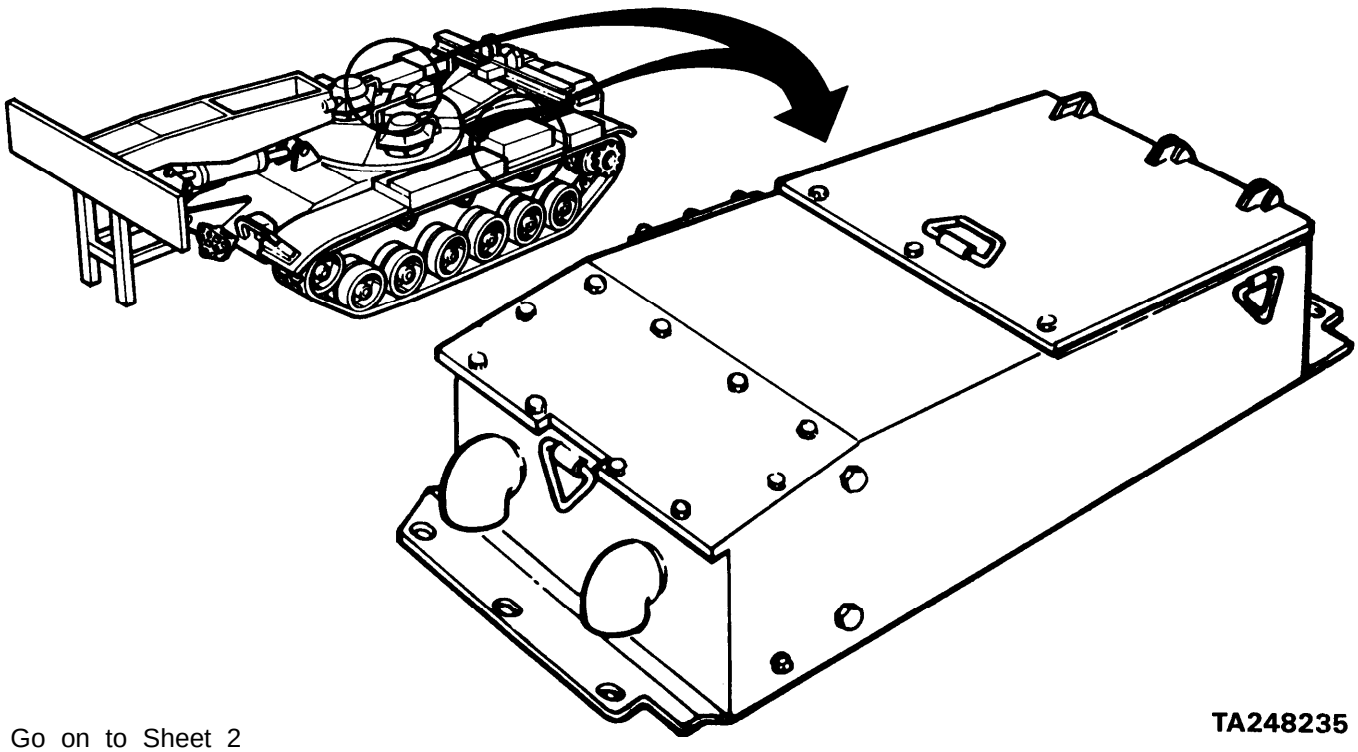

TA248235

Go on to Sheet 2

AIR CLEANER (ARMORED) CENTRIFUGAL FAN REPLACEMENT (Sheet 2 of 7)

REMOVAL

1. Using socket, remove 10 screws and lockwashers, (A) securing cover (B).

2. Place cover (B) on housing (C).

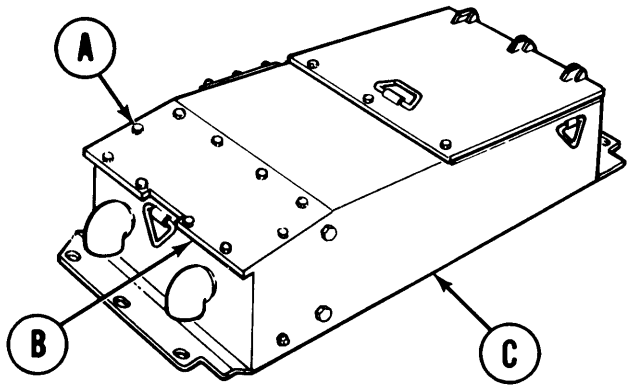

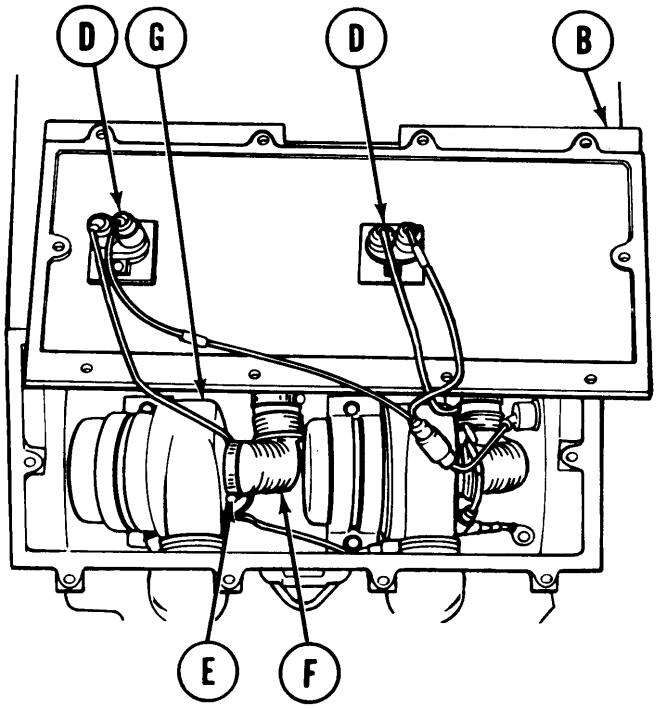

3. Disconnect and tag four electrical leads from two circuit breakers (D) mounted to underside of cover (B).

4. Remove cover (B).

NOTE

There are two centrifugal fans in each air cleaner. Each centrifugal fan is removed in the same way.

5. Using screwdriver, loosen clamp (E) securing hose (F) to inlet of centrifugal fan (G). Slide clamp onto hose.

6. Remove hose (F) from inlet of centrifugal fan (G).

Go on to Sheet 3

TA248236

AIR CLEANER (ARMORED) CENTRIFUGAL FAN REPLACEMENT (Sheet 3 of 7)

7. Disconnect centrifugal fan lead (H) from ground lead (J).

8. Using socket and extension, remove two screws and washers (K) securing strap (L).

9. Remove strap (L).

10. Remove centrifugal fan (G).

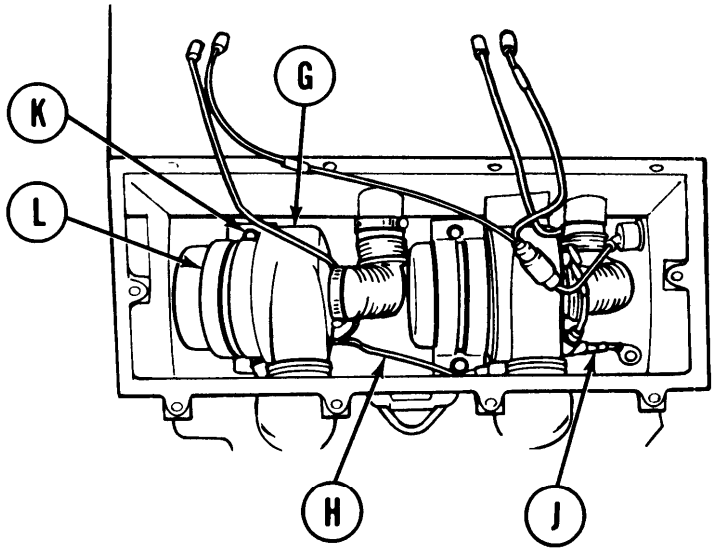

11. Using socket and extension, remove screw (M) and washer (N).

12* Remove support (P) and pad (Q).

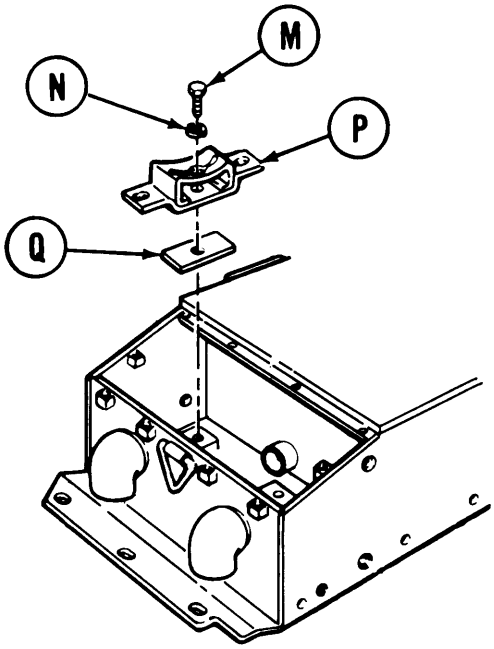

INSPECTION AND REPAIR:

1. Inspect gasket on housing. If damaged or deteriorating, replace.

Go on to Sheet 4

TA248237

AIR CLEANER (ARMORED) CENTRIFUGAL FAN REPLACEMENT (Sheet 4 of 7)

2. Inspect support for defects or damage. Replace or repair as necessary.

3. Inspect condition of pad. If defective or deteriorating, replace.

4. Inspect jumper lead. Check condition of insulation, connectors, and for continuity. Replace as necessary.

5. Inspect all threaded holes for damage or defects. Repair as necessary.

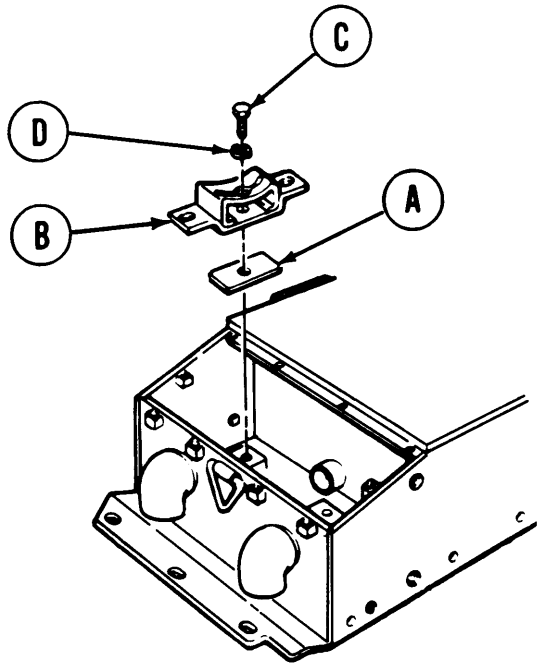

INSTALLATION:

1. Position pad (A) and support (B) into housing.

2. Coat threads of screw (C) with sealer and install with washer (D) to secure support (B).

3. Using wrench, tighten screw (C).

Go on to Sheet 5

TA248238

AIR CLEANER (ARMORED) CENTRIFUGAL FAN REPLACEMENT (Sheet 5 of 7)

4. Position centrifugal fan (E) into housing (with exhaust outlet of blower facing exhaust elbows) onto support.

5. Position strap (F) over centrifugal fan (E).

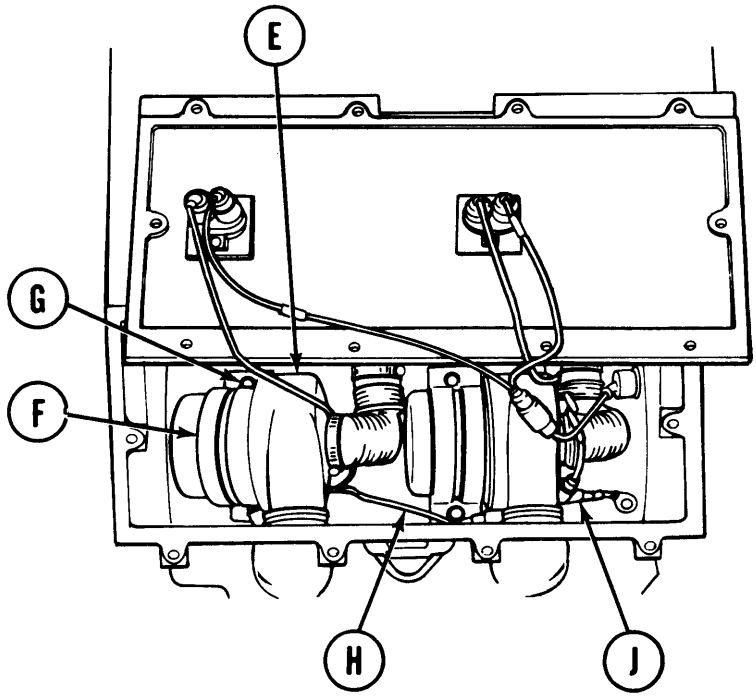

6. Install two screws and washers (G) to secure strap (F) to support.

7. Using socket with extension, tighten screws (G).

8. Connect long lead (H) from centrifugal fan (E) to ground lead connector (J).

Go on to Sheet 6

TA248239

AIR CLEANER (ARMORED) CENTRIFUGAL FAN REPLACEMENT (Sheet 6 of 7)

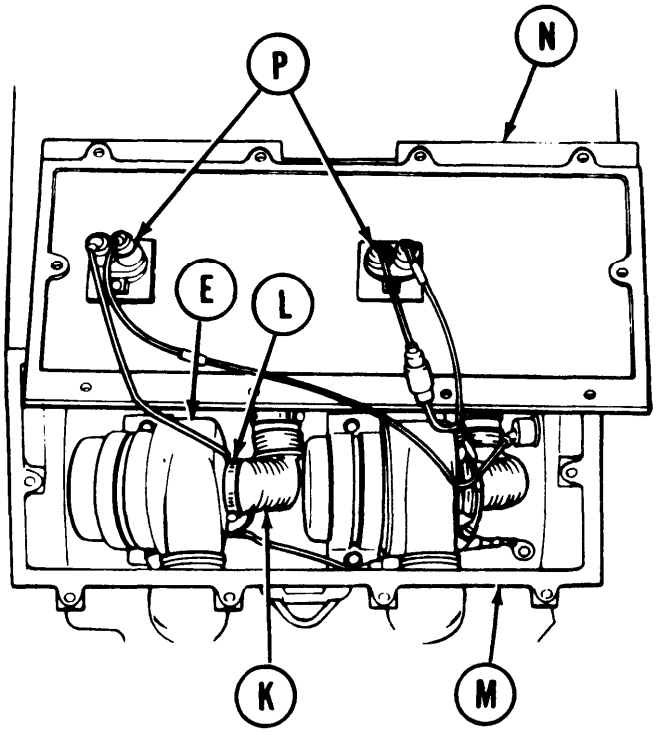

9. Apply silicone compound to inside diameter of hose end and connect hose (K) to inlet of centrifugal fan (E).

10. Slide clamp (L) up over hose and inlet of centrifugal fan (E).

11. Using screwdriver, tighten clamp (L).

12. If new gasket (M) is being used, apply sealing compound to gasket and position onto housing.

13. Lay cover (N) (with circuit breakers facing up) on air cleaner housing.

14. Connect four electrical leads to two circuit breakers (P).

15. Check operation of centrifugal fan (TM 5-5420-202-10).

Go on to Sheet 7

TA248240

AIR CLEANER (ARMORED) CENTRIFUGAL FAN REPLACEMENT (Sheet 7 of 7)

16. Position cover (N) onto housing (Q).

17. Install 10 screws and washers (R) to secure cover (N).

18. Using socket, tighten screws (R).

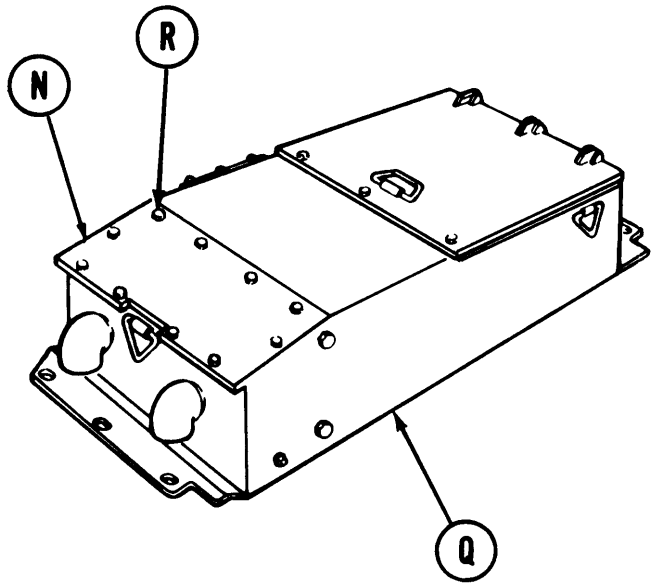

End of Task

TA248241

AIR CLEANER (ALUMINUM) CENTRIFUGAL FAN REPLACEMENT (Sheet 1 of 6)

PROCEDURE INDEX

PROCEDURE	PAGE
Removal	7-118
Inspection and Repair	7-121
Installation	7-122

TOOLS: 7/16 in. combination box and open end wrench
7/16 in. socket with 1/2 in. drive
1/2 in. socket with 1/2 in. drive
9/16 in. socket with 1/2 in. drive
2 in. extension with 1/2 in. drive
Ratchet with 1/2 in. drive
Flat-tip screwdriver

SUPPLIES: Sealing compound (Item 24, Appendix D)
Silicone compound (Item 32, Appendix D)
Gasket

REFERENCE: TM 5-5420-202-10

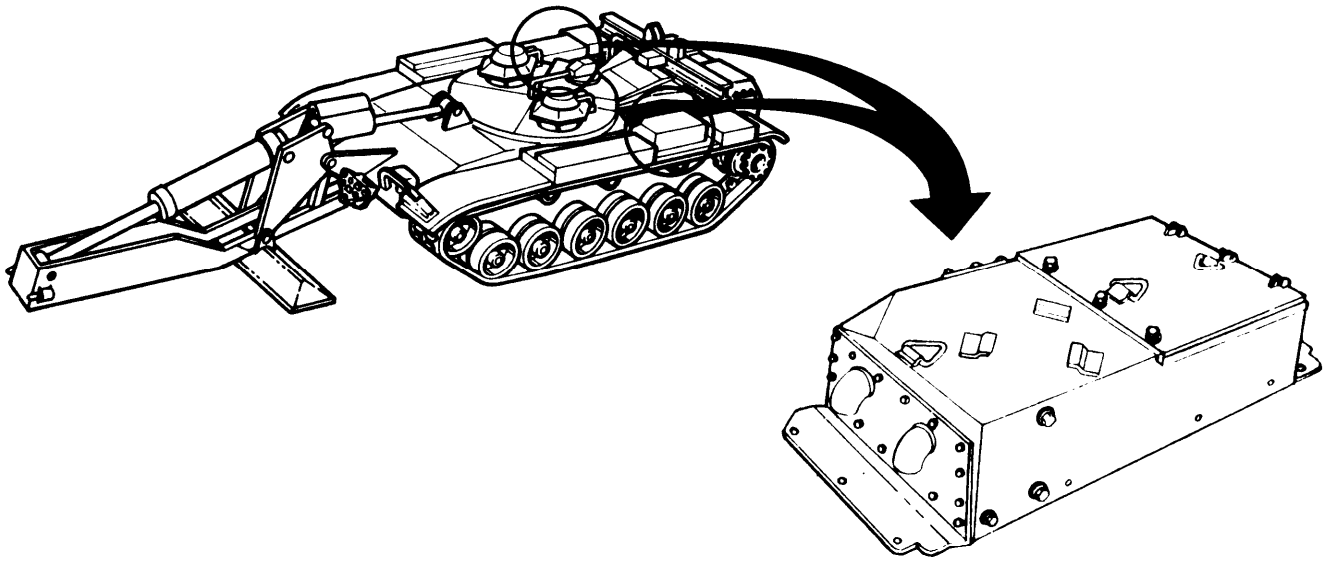

Go on to Sheet 2

TA248242

AIR CLEANER (ALUMINUM) CENTRIFUGAL FAN REPLACEMENT (Sheet 2 of 6)

NOTE

There are two centrifugal fans. Both are replaced the same way.

REMOVAL:

1. Using 7/16 inch socket and wrench, remove 16 screws and washers (A).

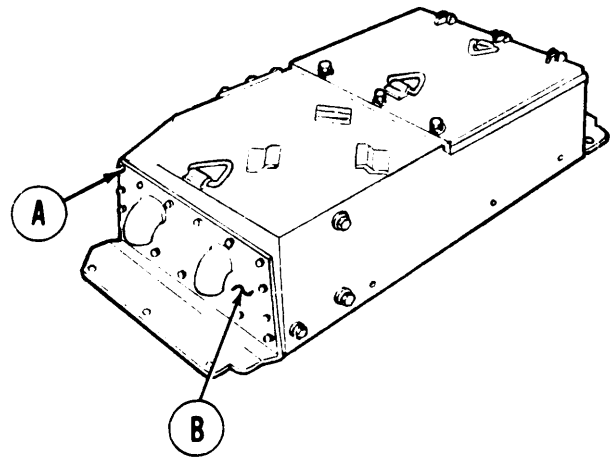

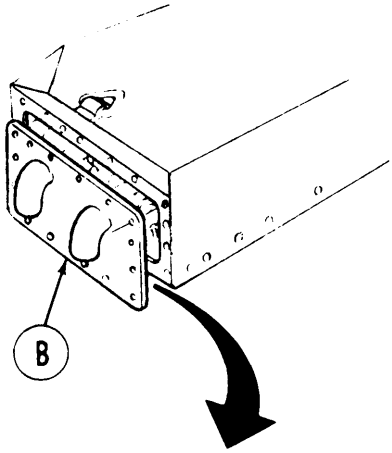

2. Pull cover (B) away from air cleaner housing, just far enough to reach connectors (C).

3. Disconnect four connectors (C) from two circuit breakers (D) on cover (B).

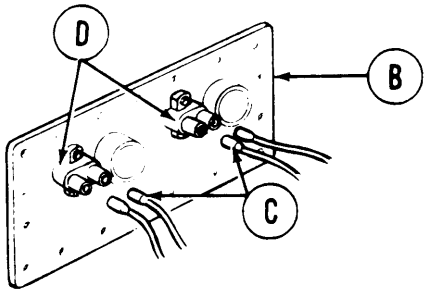

4. Remove cover (B) and gasket (E). Throw gasket (E) away.

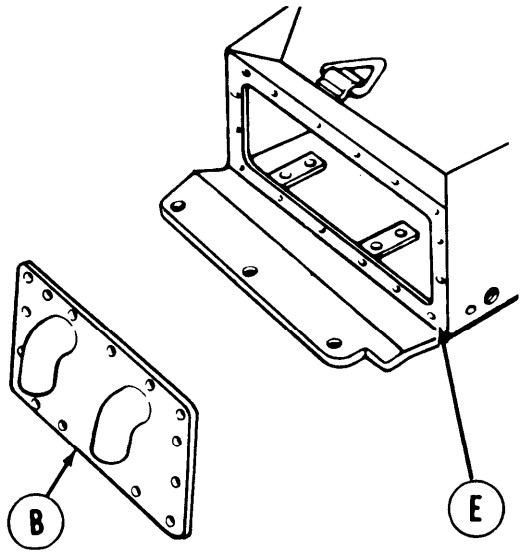

Go on to Sheet 3

TA248243

AIR CLEANER (ALUMINUM) CENTRIFUGAL FAN REPLACEMENT (Sheet 3 of 6)

5. Using screwdriver, loosen hose clamp (F) securing hose (G) to centrifugal fan inlet.
6. Slide clamp (F) away from centrifugal fan (H).
7. Disconnect hose (G) from centrifugal fan (H).
8. Disconnect electrical lead (J) from ground lead.

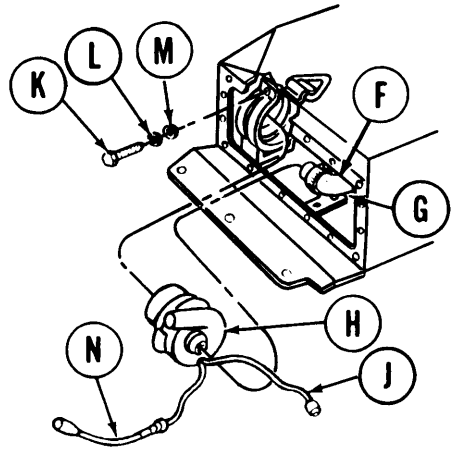

RIGHT CENTRIFUGAL FAN REMOVED FOR CLARITY

9. Using 1/2 inch socket and extension, remove two screws (K), lockwashers (L), and washers (M).
10. Carefully remove centrifugal fan (H).
11. Disconnect jumper lead (N) from centrifugal fan lead.

Go on to Sheet 4

TA248244

AIR CLEANER (ALUMINUM) CENTRIFUGAL FAN REPLACEMENT (Sheet 4 of 6)

12. Using 9/16 inch socket, remove two screws (R), lockwashers (S), and washers (T) securing bracket (U) to housing.

13. Remove bracket (U) and pad (V).

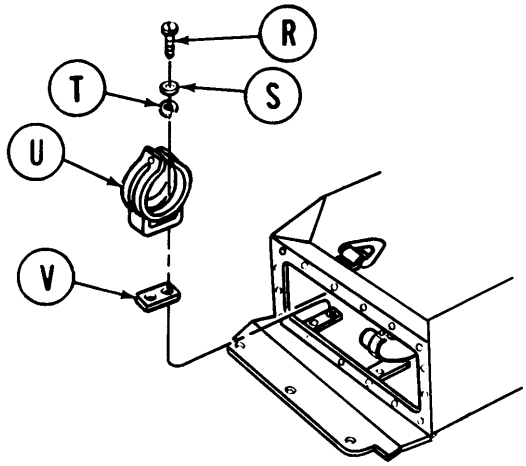

INSPECTION AND REPAIR:

1. Inspect bracket (U) for defects or damage. Replace or repair as necessary.

2. Inspect condition of pad (V). If defective or deteriorating, replace.

Go on to Sheet 5

TA248245

AIR CLEANER (ALUMINUM) CENTRIFUGAL FAN REPLACEMENT (Sheet 5 of 6)

INSTALLATION:

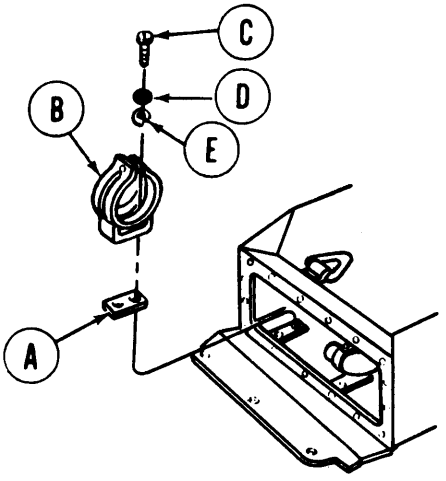

1. Position pad (A) and bracket (B) in housing.
2. Coat threads of two screws (C) with sealer and install two screws (C), lockwashers (D), and washers (E) to secure bracket (B).
3. Using 9/16 inch socket, tighten screws (C).
4. Connect jumper lead (F) to longer centrifugal fan lead.
5. Position centrifugal fan (G) into bracket (B).

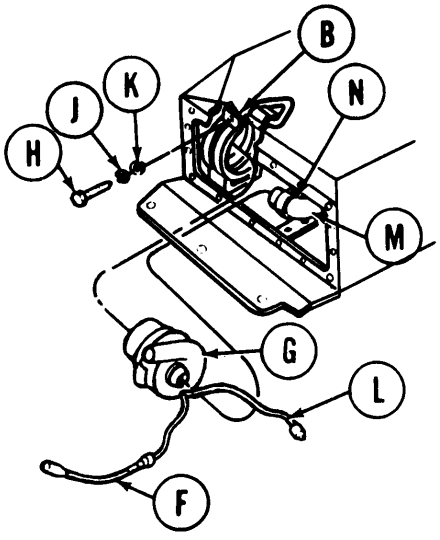

6. Position bracket (B) around centrifugal fan (G) and install two screws (H), lockwashers (J), and washers (K) to secure band.
7. Using 1/2 inch socket, tighten screws (H).
8. Connect short electrical lead (L) of centrifugal fan to ground lead.
9. Connect hose (M) to inlet port of centrifugal fan (G).
10. Slide hose clamp (N) over hose (M) and inlet port of centrifugal fan (G).
11. Using screwdriver, tighten nut of clamp (N).

Go on to Sheet 6

TA248246

AIR CLEANER (ALUMINUM) CENTRIFUGAL FAN REPLACEMENT (Sheet 6 of 6)

12. Position new gasket (P) on housing with sealing compound.

13. Position cover (Q) in front of housing.

14. Connect lead with jumper from centrifugal fan to each circuit breaker (R).

15. Connect one connector from power lead to each circuit breaker. (The power lead is the one coming from the side of the housing.)

16. Check operation of air cleaner centrifugal fan (TM 5-5420-202-10).

17. Position cover (Q) to housing and install 16 screws (S), lockwashers (T), and washers (U) to secure cover.

18. Using 7/16 inch socket and 7/16 inch wrench, tighten screws (S).

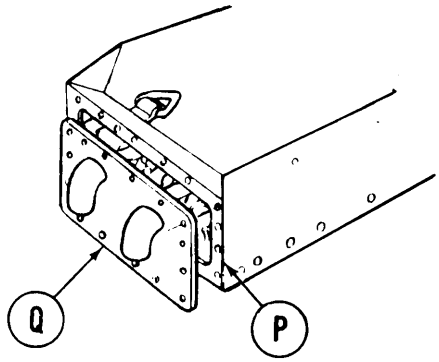

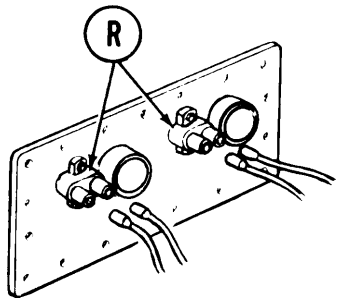

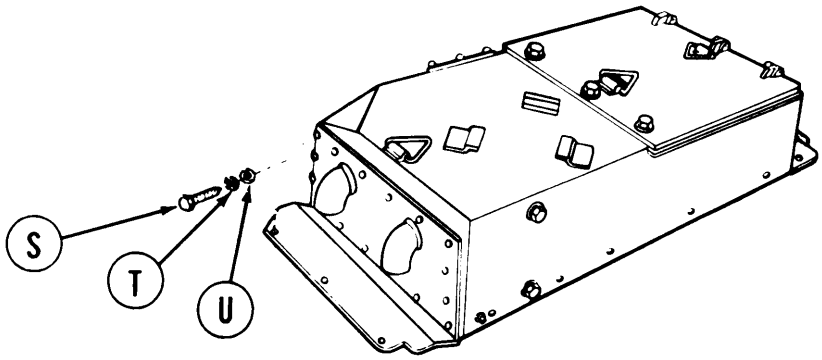

End of Task

TA248247

AIR CLEANER (ARMORED) CIRCUIT BREAKER REPLACEMENT (Sheet 1 of 1)

TOOLS: 1/2 in. socket with 1/2 in. drive
Cross-tip screwdriver
Ratchet with 1/2 in. drive

REFERENCE: TM 5-5420-202-10

NOTE

All air cleaner circuit breakers are removed and installed the same way.

REMOVAL:

1. Using socket, remove 10 screws (A) and lockwashers (B) securing cover (C) to air cleaner.
2. Using screwdriver, remove *screws* (D) and lockwashers (E) securing circuit breaker (F) to cover (C).
3. Remove circuit breaker (F).
4. Disconnect two electrical leads (G).

INSTALLATION:

1. Position circuit breaker (F) onto cover (C).
2. Install washers (E) and screws (D) to secure circuit breaker (F) to cover (C). Use cross-tip screwdriver and tighten screws (D).
3. Connect two electrical leads (G).
4. Install cover (C) and secure with 10 screws (A) and lockwashers (B).
5. Using socket, tighten screws (A).
6. Check operation of centrifugal fans (TM 5-5420-202-10).

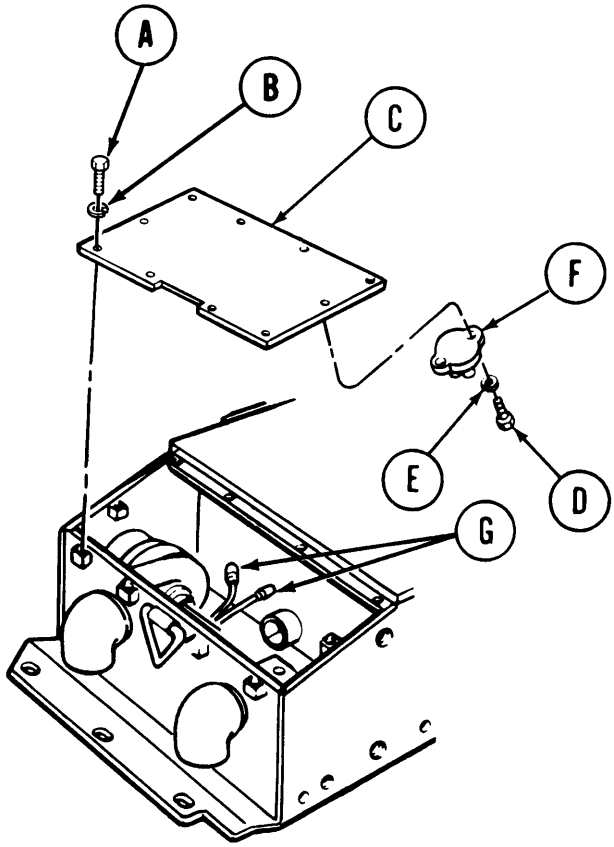

End of Task

TA248248

AIR CLEANER (ALUMINUM) CIRCUIT BREAKER REPLACEMENT (Sheet 1 of 1)

TOOLS: Flat-tip screwdriver

REFERENCE: TM 5-5420-202-10

PRELIMINARY PROCEDURE: Remove air cleaner cover (page 7-106)

REMOVAL:

1. Using screwdriver, remove four screws (A) and lockwashers (B) securing two circuit breakers (C) to cover (D).

2. Remove two circuit breakers (C).

INSTALLATION:

1. Position two circuit breakers (C) onto cover (D)

2. Install lockwashers (B) and screws (A) to secure circuit breakers (C) to cover (D). Using screwdriver, tighten screws (A).

3. Install air cleaner cover (page 7-108).

4. Check operation of centrifugal fans (TM 5-5420-202-10).

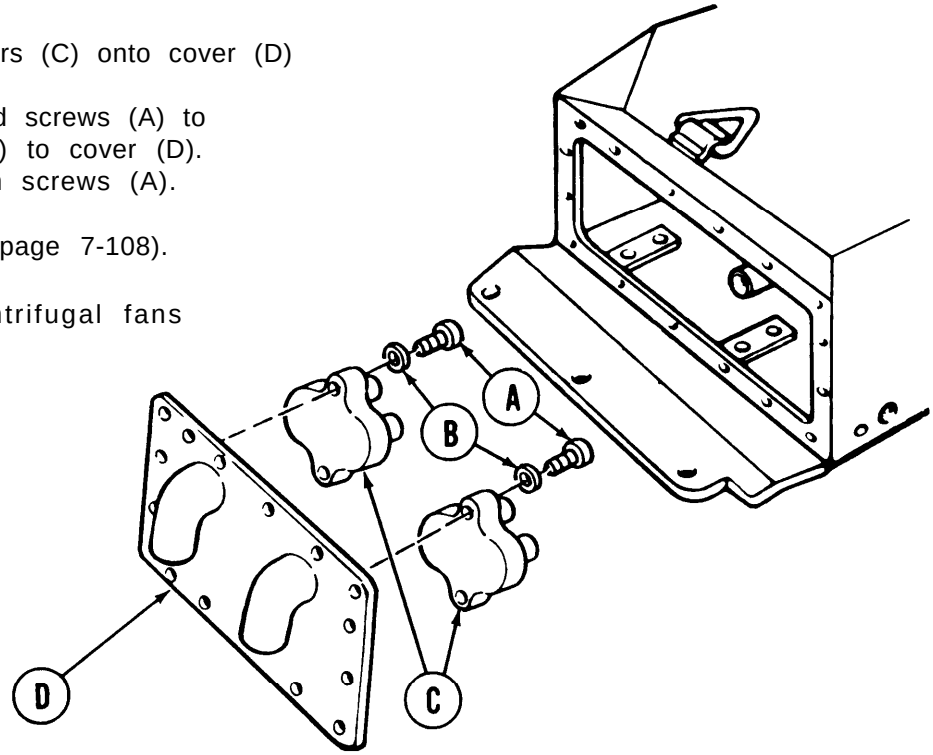

End of Task

TA248249

AIR CLEANER CENTRIFUGAL FAN GROUND LEAD REPLACEMENT (Sheet 1 of 2)

TOOLS: 7/16 in. combination box and open end wrench

SUPPLIES: Lockwasher (2 required)

REFERENCE: TM 5-5420-202-10

PRELIMINARY PROCEDURES: Remove air cleaner centrifugal fan cover (armored, page 7-103, aluminum, page-7-106)
Make sure MASTER BATTERY switch is OFF (TM 5-5420-202-10)

NOTE

Remove of left or right centrifugal fan ground lead is the same. Left side shown.

REMOVAL:

1. Disconnect two connectors (A) from centrifugal fan leads (B).
2. Using wrench, remove screw (C) and lockwashers (D) securing ground lead (E) to terminal boss (F).
3. Remove ground lead (E).

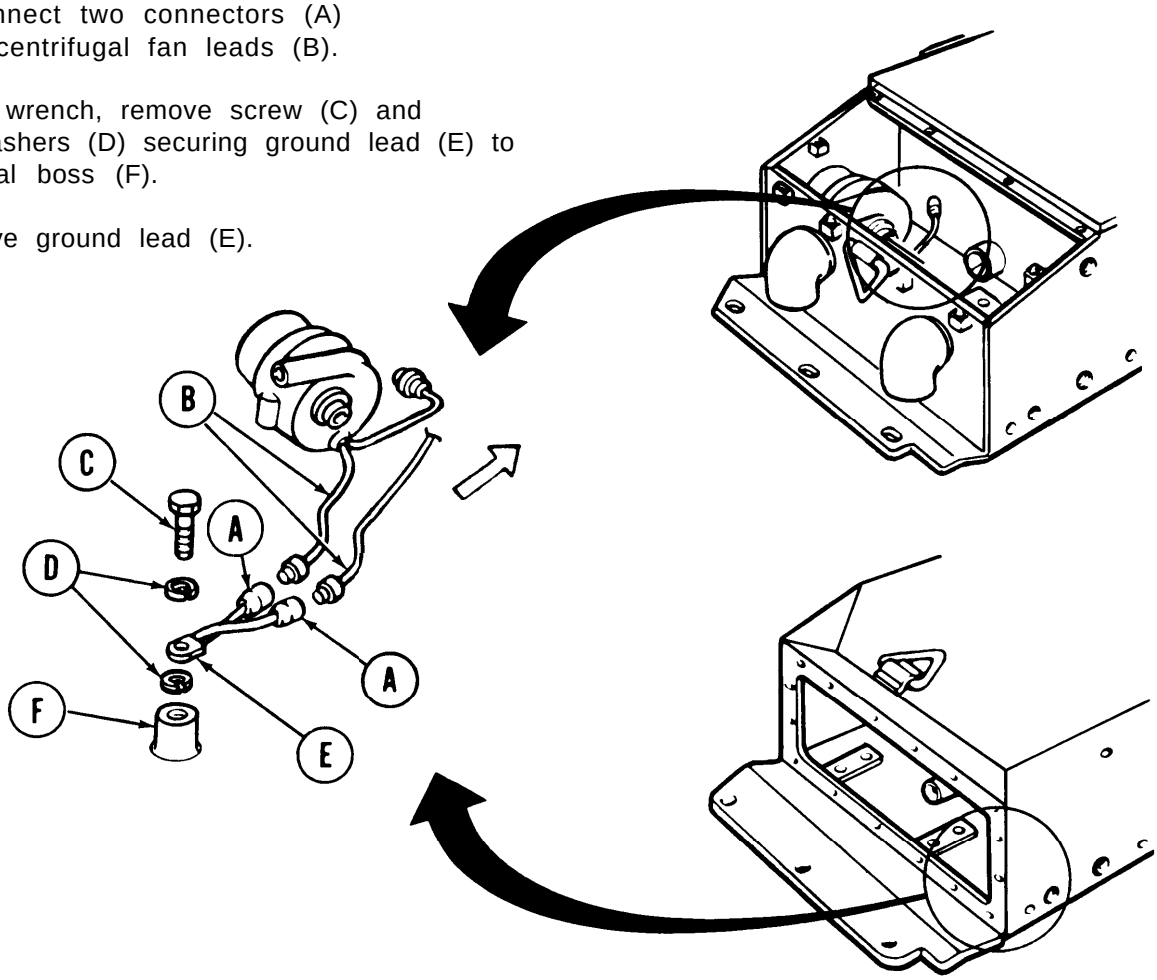

Go on to Sheet 2

TA248250

AIR CLEANER CENTRIFUGAL FAN GROUND LEAD REPLACEMENT (Sheet 2 of 2)

INSTALLATION:

1. Connect two connectors (A) to centrifugal fan leads (B).
2. Install two lockwashers (C) and screw (D) to secure ground lead (E) terminal to boss (F).
3. Using wrench, tighten screw (D).
4. Install air cleaner centrifugal fan cover (armored, page 7-105, aluminum, page 7-108).
5. Check operation of centrifugal fan (TM 5-5420-202-10).

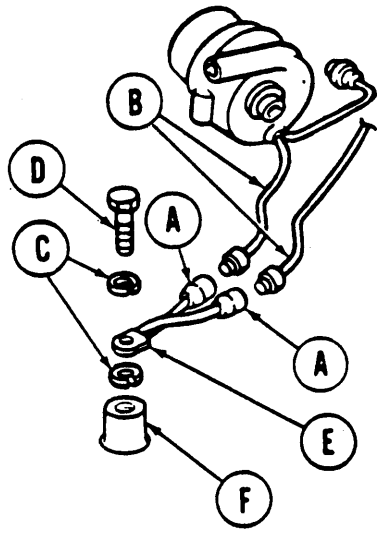

End of Task

TA248251

AIR CLEANER DOOR REPAIR (Sheet 1 of 3)

TOOLS: 9/16 in. combination box and open end wrench
Long round nose pliers
Hammer (or mallet)
Slip joint pliers

SUPPLIES: Gasket
Cotter pins (3 required)
Goggles (Item 70, Appendix D)
Leather gloves (Item 76, Appendix D)
Loctite adhesive (Item 74, Appendix D)
Face shield (Item 77, Appendix D)

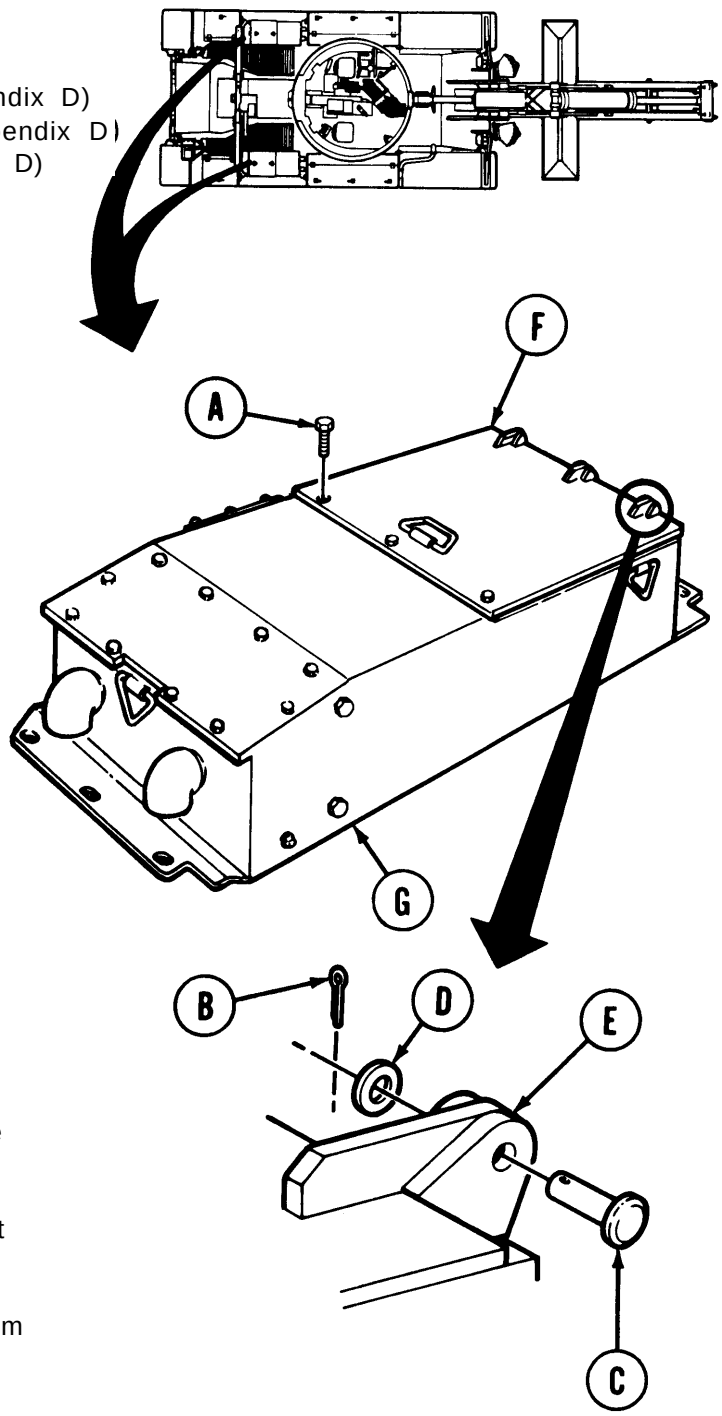

REMOVAL:

WARNING

To prevent screws from pulling out of box and injuring personnel, a minimum of 200 pounds must be placed atop the door before attempting to remove screws.

NOTE

If captive screws are used, they will only be loosened and not removed.

1. Using wrench, remove three screws (A).
2. Using long round nose pliers, pull three cotter pins (B) out of three straight pins (c).
3. Remove flat washers (D).
4. Using hammer, tap straight pins (C) free of door hinges (E).
5. Using slip joint pliers, pull three straight pins (C) from door hinges.
6. Lift door assembly (F) and remove it from air cleaner housing (G).

Go on to Sheet 2

AIR CLEANER DOOR REPAIR (Sheet 2 of 3)

INSPECTION AND REPAIR:

1. Inspect bolts (A) and gasket (B).

2. If threads of bolts (A) are stripped, replace bolts.

3. If gasket (B) is damaged in any way, remove it.

4. Apply adhesive on new gasket (B). Install gasket into groove at underside of door (C).

WARNING

Compressed air used for cleaning purposes will not exceed 30 psi. Use only with effective chip guarding and personal protective equipment (goggles, face shield, gloves, long sleeves, etc.)

5. Inspect screw holes in housing (D). If holes are not drilled through, use compressed air to remove sand, dirt, or debris from holes.

6. Replace marker (E) or identification plate (F) as necessary. Install marker (E) so it can be read from center of vehicle.

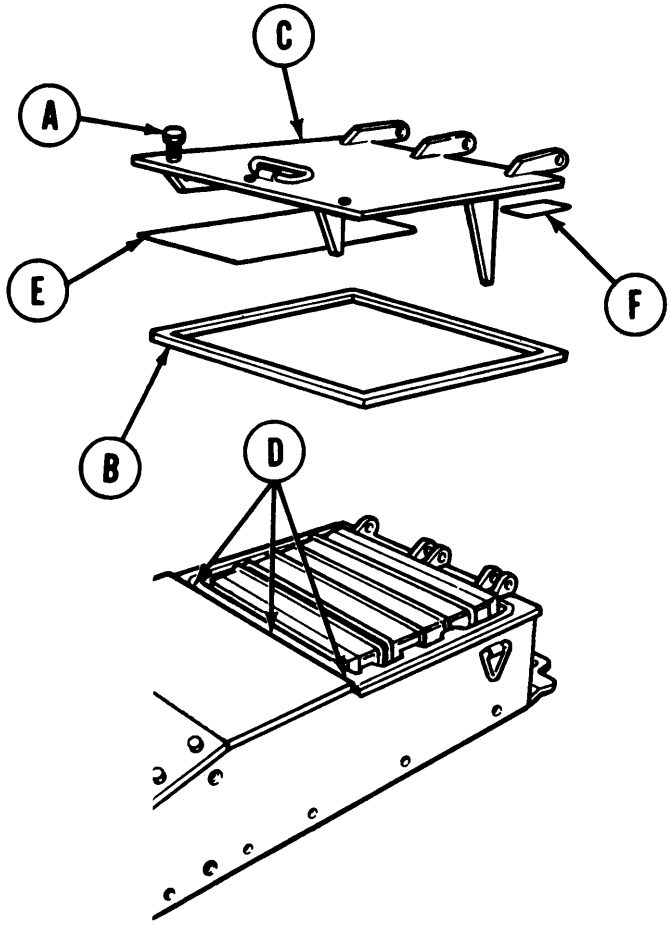

Go on to Sheet 3

AIR CLEANER DOOR REPAIR (Sheet 3 of 3)

INSTALLATION:

1. Lift door assembly (A) into place on air cleaner housing (B).

2. Using hammer, tap three straight pins (C) into three hinges (D).

3. Install three flat washers (E) onto three straight pins (C).

4. Using hammer, tap three new cotter pins (F) into holes in straight pins (C).

5. Using hammer, tap cotter pins (F) around straight pins (C) to secure washers (E) and pins in place.

6. Make sure door assembly (A) is in closed position (lowered).

WARNING

To prevent screws from pulling out of box and injuring personnel, a minimum of 200 pounds must be placed atop the door before installing screws.

7. Using wrench, install and tighten three screws (G) to secure door air cleaner housing (B).

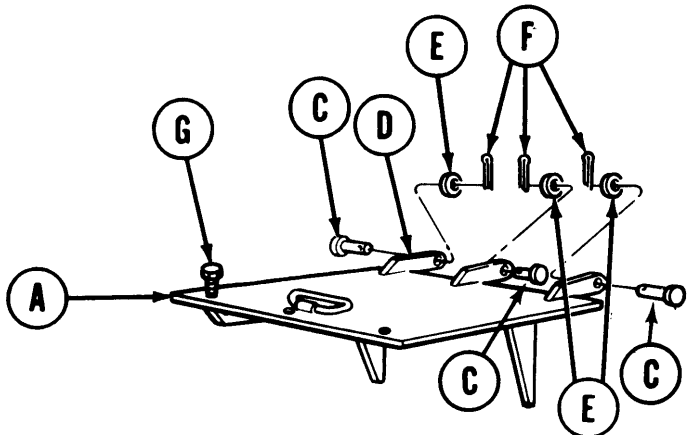

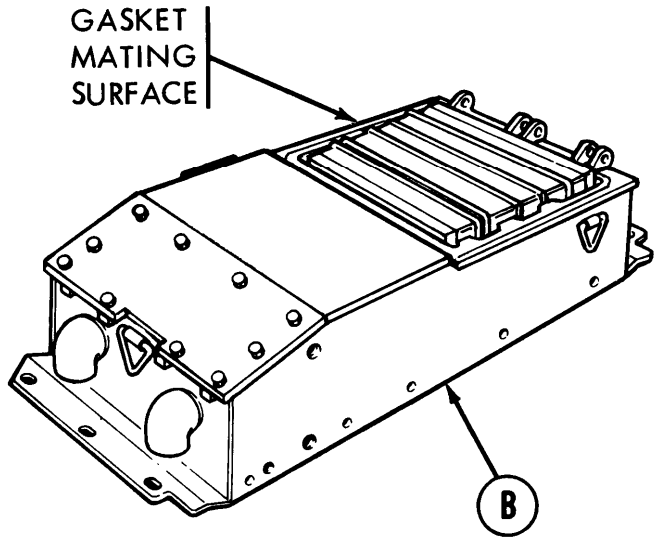

End of Task

AIR CLEANER MANIFOLD COVER AND GASKET REPLACEMENT (Sheet 1 of 2)

TOOLS: 1/2 in. socket with 1/2 in. drive
Ratchet with 1/2 in. drive
2 in. extension with 1/2 in. drive

SUPPLIES: Sealing compound (Item 24, Appendix D)
Gasket
Lockwasher (10 required)

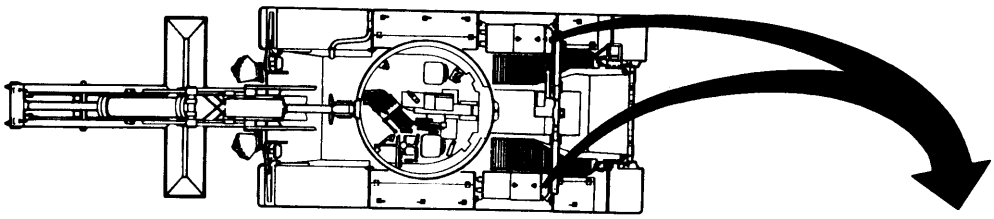

REMOVAL:

1. Using socket, remove 10 screws and lockwashers (A) securing cover (B).

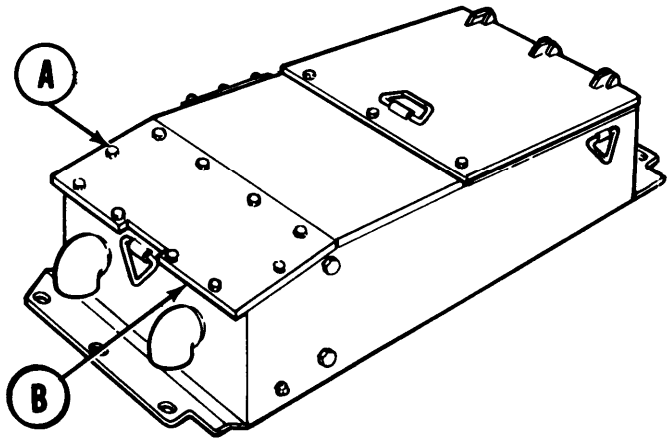

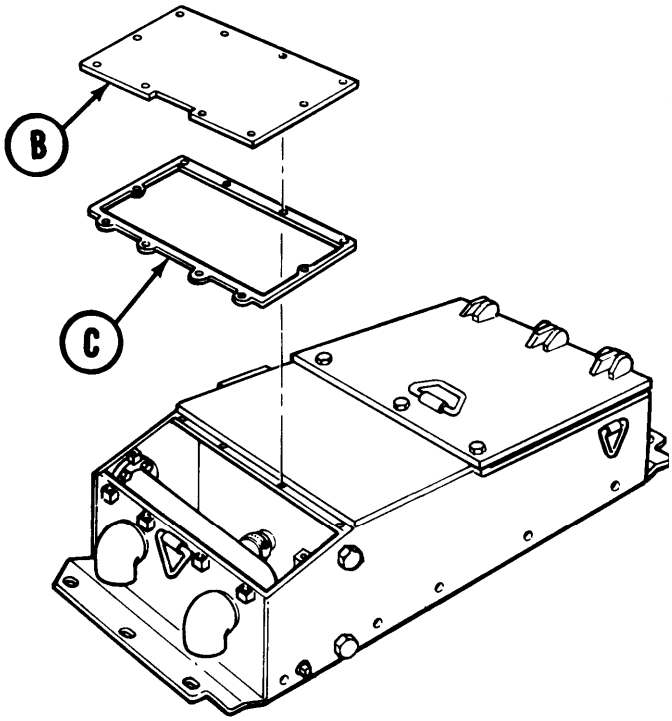

2. Remove cover (B) and gasket (C). Throw gasket away.

Go on to Sheet 2

AIR CLEANER MANIFOLD COVER AND GASKET REPLACEMENT (Sheet 2 of 2)

INSTALLATION:

1. Apply sealing compound to mounting surface (A) of air cleaner (B).

2. Put gasket (C) in place on mounting surface (A).

3. Place cover (D) in position on air cleaner (B).

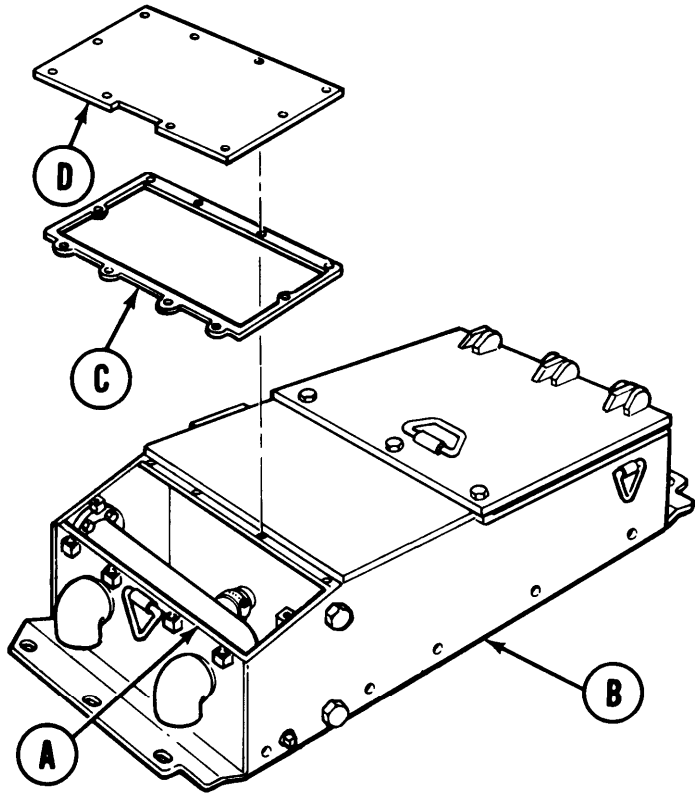

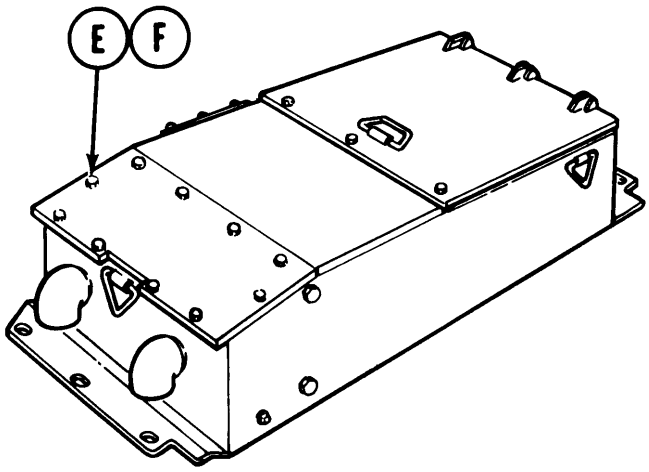

4. Using socket, install 10 screws (E) and new lockwashers (F).

End of Task

AIR CLEANER MANIFOLD AND RELATED PARTS REPLACEMENT (Sheet 1 of 4)

PROCEDURE INDEX

PROCEDURE	PAGE
Removal	7-130.4
Installation	7-130.5

TOOLS: 1/4 in. flat-tip screwdriver
7/1 6 in. combination box and open end wrench
1/2 in. combination box and open end wrench
1/2 in. socket with 1/2 in. drive
6 in. extension with 1/2 in. drive
Ratchet with 1/2 in. drive

SUPPLIES: Silicone compound (Item 32, Appendix D)
Sealing compound (Item 24, Appendix D)
Gasket
Hose (2 required)
Lockwasher (5 required)

REFERENCE: TM 5-5420-202-10

PRELIMINARY PROCEDURES: Open top deck grille doors (TM 5-5420-202-10)
Remove manifold cover (page 7-130.1)

NOTE

Replacement of left or right manifolds is similar. Left manifold shown.

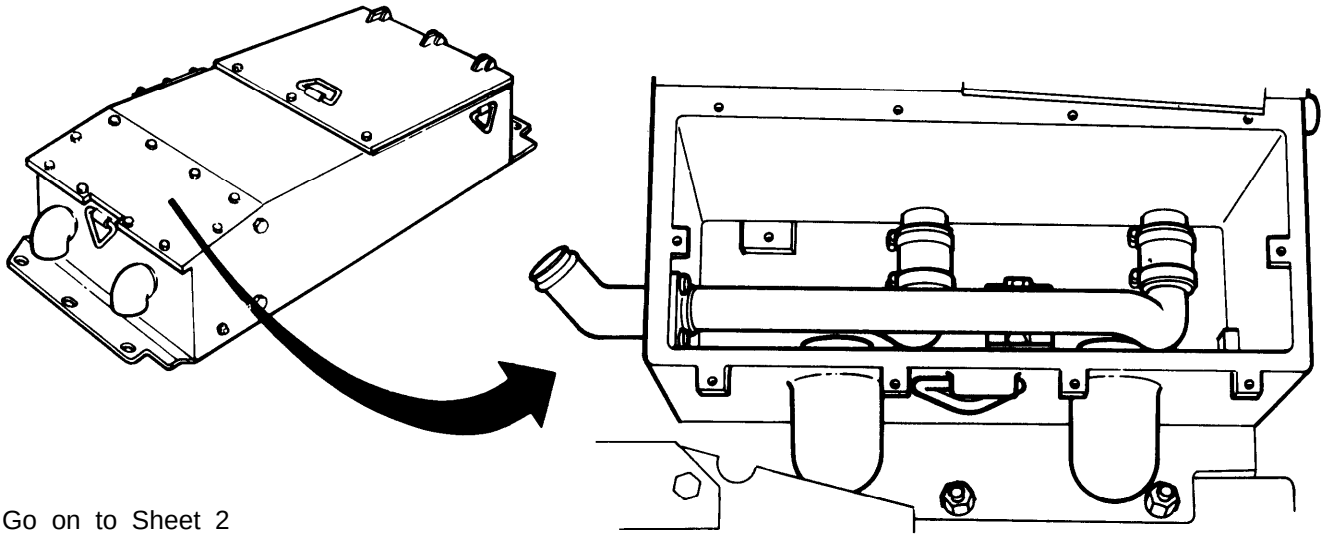

Go on to Sheet 2

AIR CLEANER MANIFOLD AND RELATED PARTS REPLACEMENT (Sheet 2 of 4)

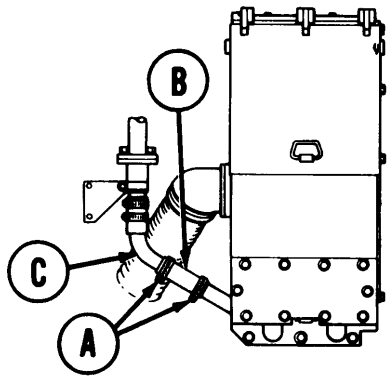

REMOVAL:

1. Using screwdriver, loosen clamps (A) securing hose (B).

2. Slide hose (B) back onto elbow (C).

3. Using screwdriver, loosen four clamps (D) securing two hoses (E) to manifold (F) and precleaned tubes (G).

4. Using 7/16 inch wrench, remove four screws (H) and lockwashers (J) securing manifold (F) to side of housing.

5. Using 1/2 inch socket, remove screw (K) and lockwasher (L) securing bracket (M) to bottom of housing.

6. Slide hoses (E) onto manifold (F) until hoses are even with edge of manifold. Turn manifold until both inlet tubes are facing up. Remove clamps (D).

7. Remove manifold (F) from housing.

8. Remove and discard hoses (E) and gasket (N) from manifold (F).

9. Using 7/16 inch wrench, remove screw (P) and lockwasher (Q) securing bracket (M) to manifold (F).

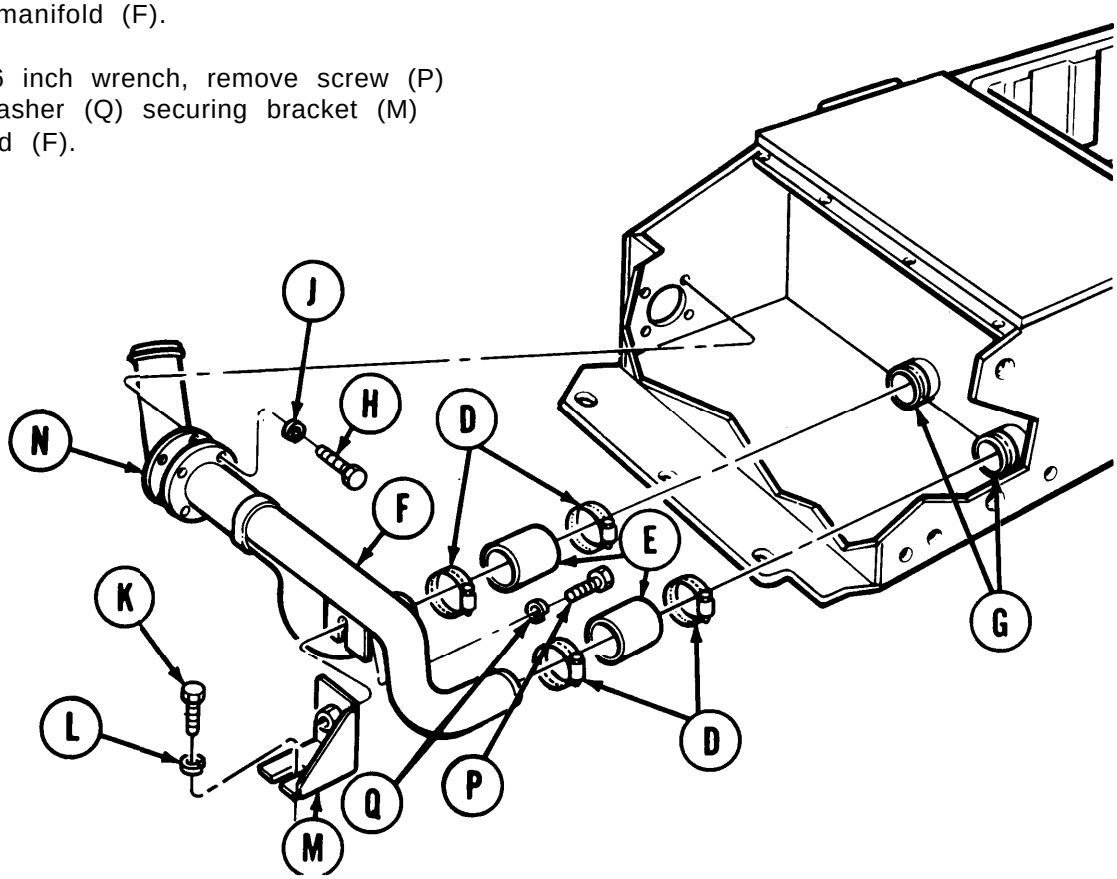

Go on to Sheet 3

AIR CLEANER MANIFOLD AND RELATED PARTS REPLACEMENT (Sheet 3 of 4)

INSTALLATION:

1. Position bracket (A) to manifold (B).

2. Using 7/16 inch wrench, install screw (C) and new lockwasher (D) to secure manifold (B) to bracket (A).

3. Apply silicone compound to inside ends of two new hoses (E).

4. Slide hoses (E) onto manifold (B).

5. Install new gasket (F) onto manifold (B).

6. Position manifold into housing.

7. With hoses (E) facing up, install two clamps (G) onto each hose (E).

8. Rotate manifold (B) until hoses (E) line up with precleaned tubes (H).

9. Slide hoses (E) onto precleaner tubes (H).

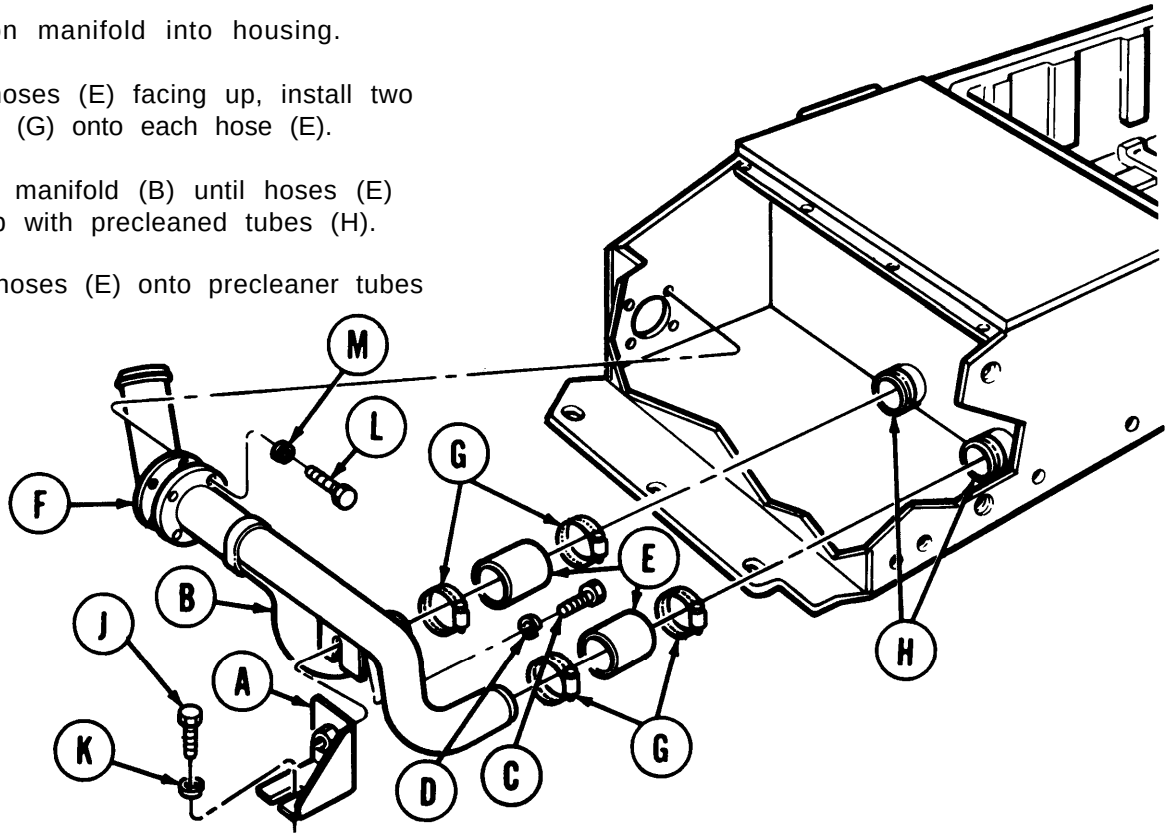

10. Using 1/2 inch wrench, install screw (J) and new lockwasher (K) to secure bracket (A) to bottom of housing.

11. Apply a thin coat of sealing compound to threads of four screws (L).

12. Using 7/16 inch wrench, install four screws (L) and new lockwashers (M) to secure manifold (B) and gasket (F) to side of housing.

13. Position clamps (G) on hoses (E) over manifold (B) and precleaned tubes (H). Use screwdriver and tighten clamps (G).

Go on to Sheet 4

AIR CLEANER MANIFOLD AND RELATED PARTS REPLACEMENT (Sheet 4 of 4)

14. Install manifold cover (page 7-130.2).

15. Slide hose (N) from elbow (P) onto manifold (B).

16. Position clamps (Q) over hose (N) and, using screwdriver, tighten clamps (Q) to secure hose (N) to elbow (P) and manifold (B).

17. Close top deck grille doors (TM 5-5420-202-10).

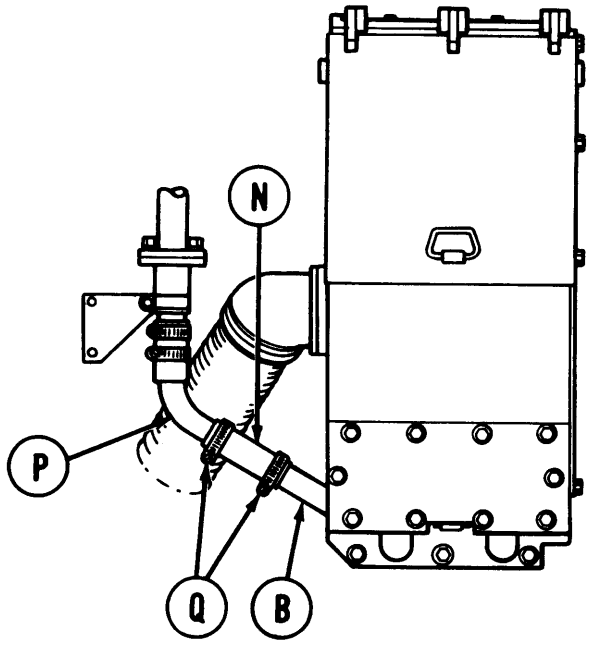

End of Task

DUST DETECTOR PRESSURE SWITCH AND BRACKET REPLACEMENT (Sheet 1 of 4)

PROCEDURE INDEX

PROCEDURE	PAGE
Removal	7-130.7
Installation	7-130.9

TOOLS: 7/16 in. combination box and open end wrench
9/16 in. combination box and open end wrench (2 required)
5/8 in. combination box and open end wrench (2 required)

SUPPLIES:
Preformed packing (2 required)
Lockwasher (3 required]

REFERENCE: TM 5-5420-202-10

NOTE

Replacement procedures for the left and right side pressure switch and bracket are the same except that the left side requires removal of the top deck.

PRELIMINARY PROCEDURES: Open top deck grille doors (TM 5-5420-202-10)
For left side only, remove top deck (page 16-21)

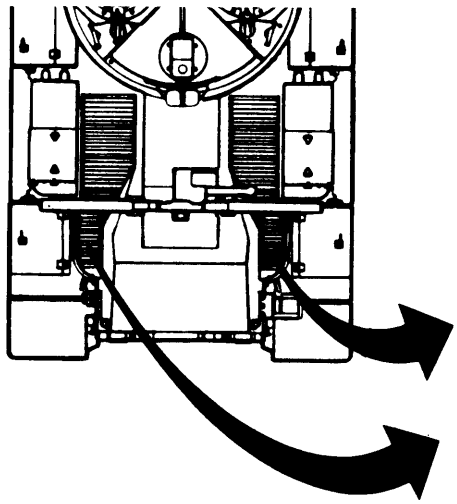

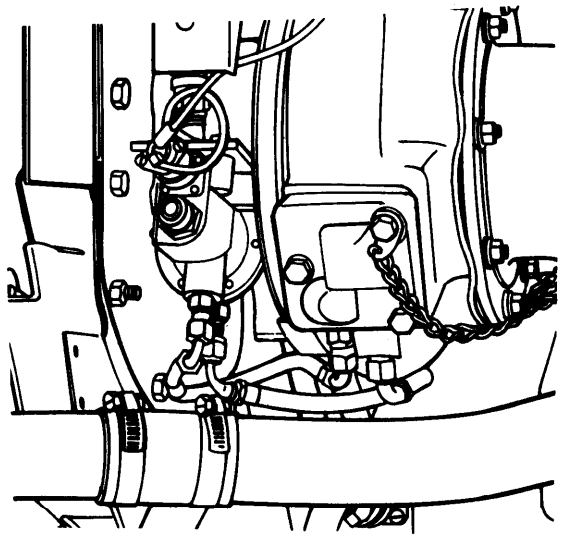

Go on to Sheet 2

DUST DETECTOR PRESSURE SWITCH AND BRACKET REPLACEMENT (Sheet 2 of 4)

REMOVAL:

1. Disconnect electrical connector (A) from pressure switch (B).

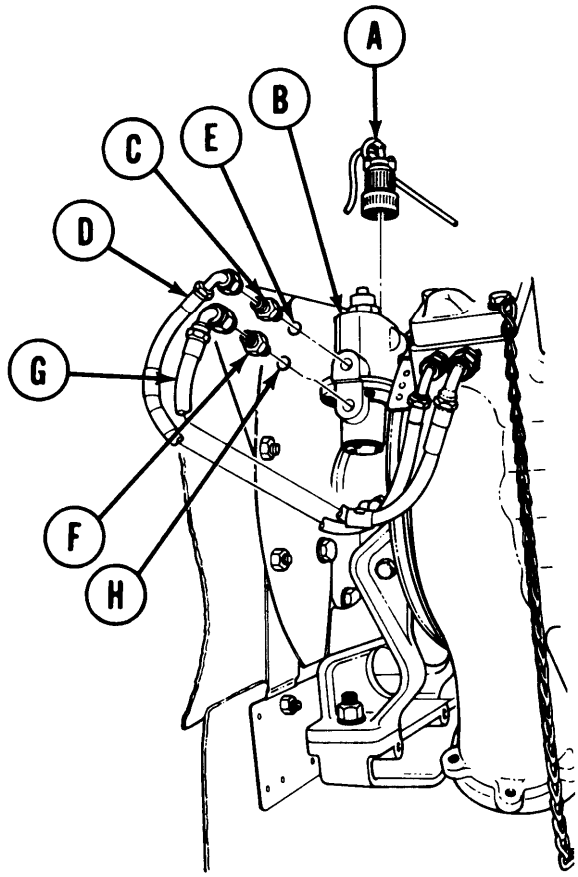

2. Using one 9/16 inch wrench to hold adapter (C), use other 9/16 inch wrench and disconnect hose assembly (D) from adapter (C).

3. Using 9/16 inch wrench, remove adapter (C) and preformed packing (E) from pressure switch (B). Discard preformed packing.

4. Using one 5/8 inch wrench to hold adapter (F), use other 5/8 inch wrench and disconnect hose assembly (G) from adapter (F).

5. Using 5/8 inch wrench, remove adapter (F) and preformed packing (H) from pressure switch (B). Discard preformed packing.

Go on to Sheet 3

DUST DETECTOR PRESSURE SWITCH AND BRACKET REPLACEMENT (Sheet 3 of 4)

6. Using 9/16 inch wrench, remove assembled washer-screw (J) securing bracket (K). Remove bracket with pressure switch (B) from turbosupercharger.

7. Using 7/16 inch wrench, remove three screws (L) and lockwashers (M) securing pressure switch (B) and ground lead (N) to bracket (K).

8. Remove pressure switch (B).

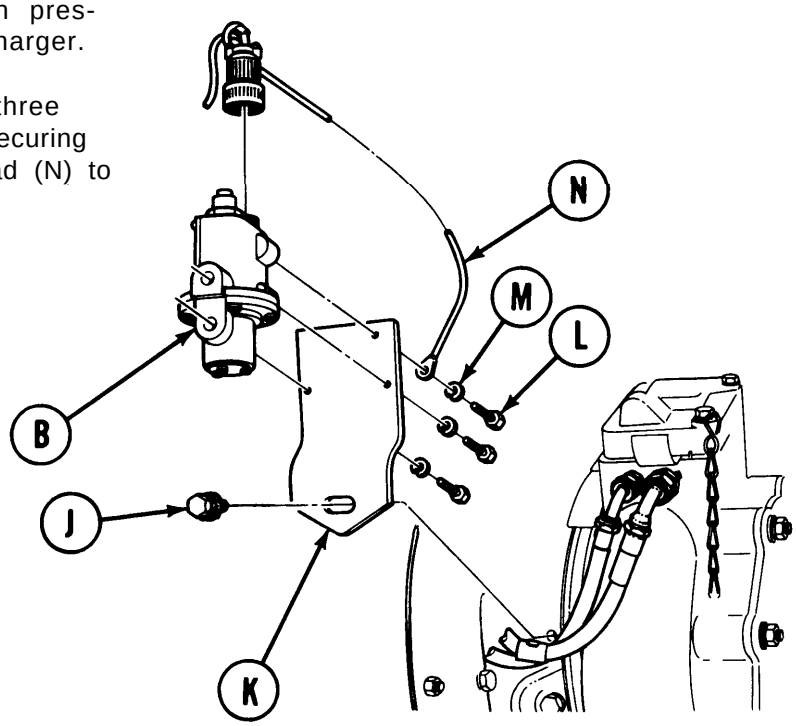

INSTALLATION:

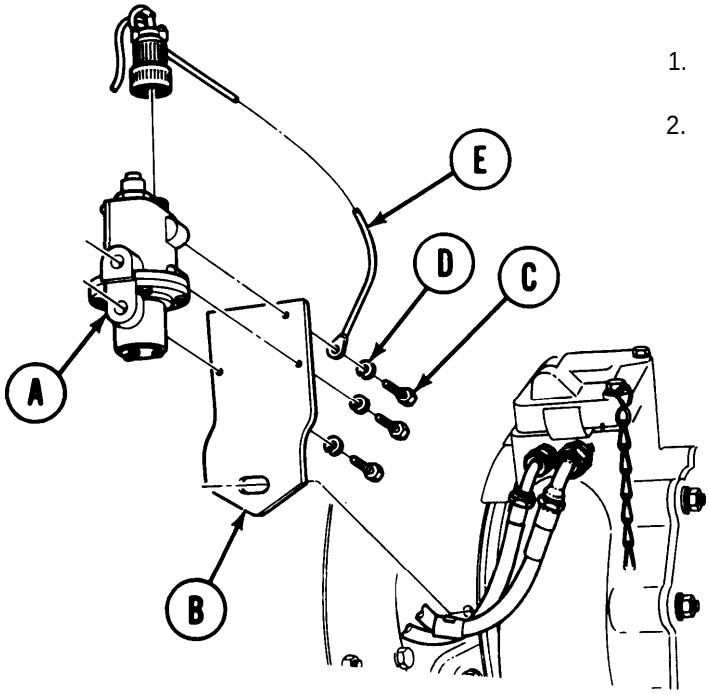

1. Position pressure switch (A) to bracket (B).

2. Using 7/16 inch wrench, install three screws (C) and three new lockwashers (D) to secure pressure switch (A) and ground lead (E) to bracket (B).

Go on to Sheet 4

DUST DETECTOR PRESSURE SWITCH AND BRACKET REPLACEMENT (Sheet 4 of 4)

3. Position bracket (B) with pressure switch (A) to turbosupercharger and, using 9/16 inch wrench, install assembled screw-washer (F) to secure bracket (B) to turbo-supercharger.

4. Install new preformed packing (G) onto adapter (H). Using 9/16 inch wrench, install adapter (H) onto pressure switch (A).

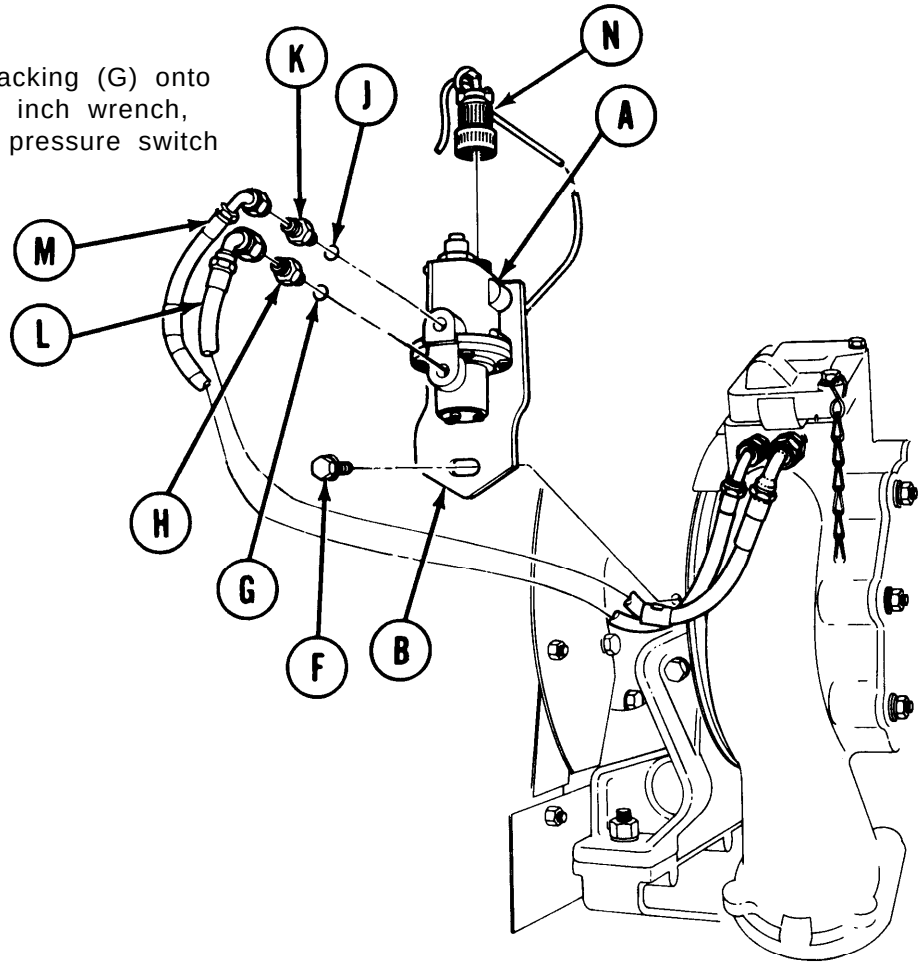

5. Install new preformed packing (J) onto adapter (K). Using 5/8 inch wrench, install adapter (K) onto pressure switch (A).

6. Using 5/8 inch wrench, connect and tighten hose assembly (L) to adapter (H).

7. Using 9/16 inch wrench, connect and tighten hose assembly (M) to adapter (K).

8. Connect electrical connector (N) to pressure switch (A).

9. Perform operational test (page 10-298.17).

10. For left side only, install top deck (page 16-23).

11. Close top deck grille doors (TM 5-5420-202-20).

End of Task

DUST DETECTOR FILTER STRIP AND COVER REPLACEMENT (Sheet 1 of 3)

TOOLS: 1/2 in. combination box and open end wrench

SUPPLIES: Preformed packing (3 required)

REFERENCE: TM 5-5420-202-10

PRELIMINARY PROCEDURE: Open top deck grille doors (TM 5-5420-202-10)

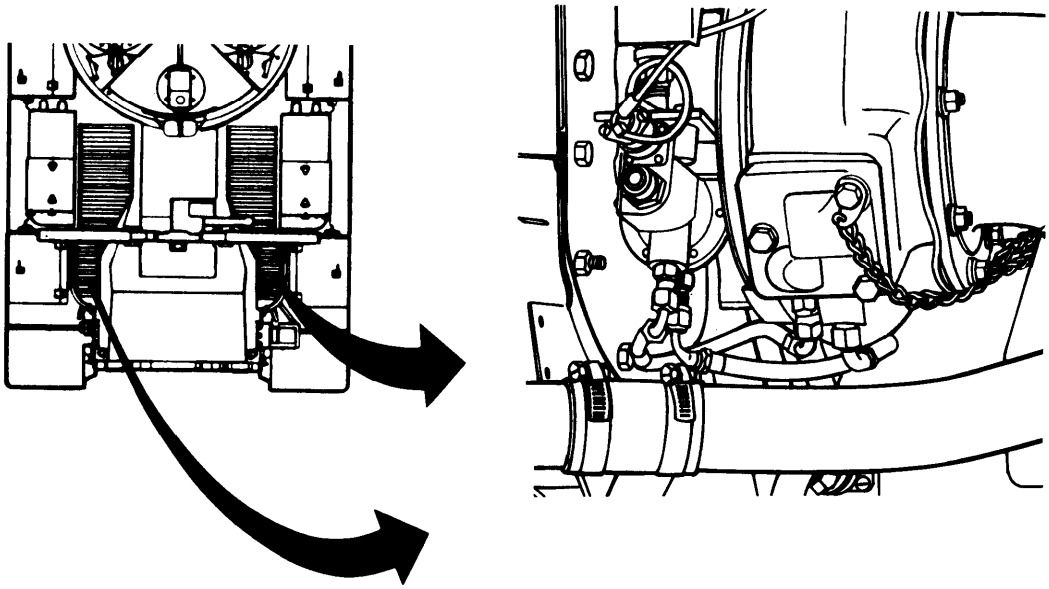

Go on to Sheet 2

DUST DETECTOR FILTER STRIP AND COVER REPLACEMENT (Sheet 2 of 3)

REMOVAL:

1. Using 1/2 inch wrench, remove screw (A) and washer (B) securing chain and fastener (C).

2. Using 1/2 inch wrench, remove screw and washer (D).

3. Using 1/2 inch wrench, remove screw (E) and packing with retainer (F). Discard packing with retainer.

4. Remove cover (G) from turbosupercharger (H).

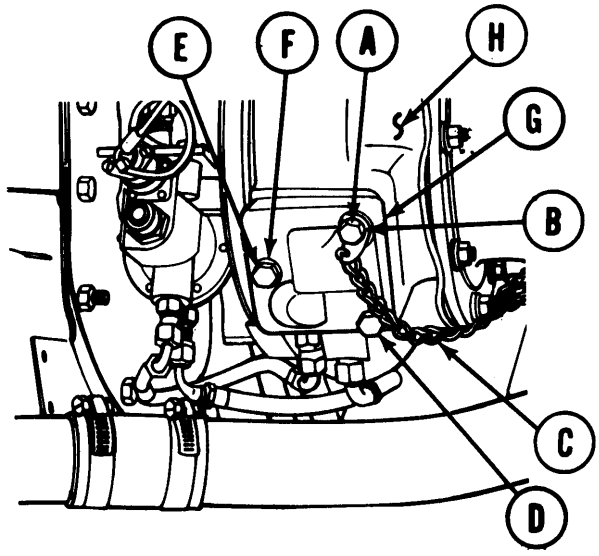

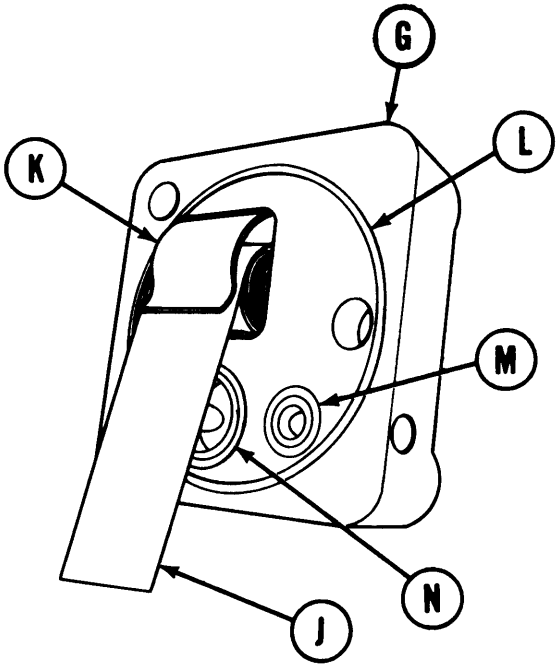

5. Remove filter tape (J) and retaining strap (K) from cover (G).

6. Remove and discard preformed packings (L), (M), and (N).

Go on to Sheet 3

DUST DETECTOR FILTER STRIP AND COVER REPLACEMENT (Sheet 3 of 3)

INSTALLATION:

1. Install filter tape (A) into retaining strap (B) and insert into cover (C).

2. Install new preformed packings (D), (E), and (F) into cover (C).

3. Pull out filter strip (A) so it extends about 1/2 inch past edge of cover (C).

4. Position assembled cover (C) onto turbo-supercharger compressor housing (G).

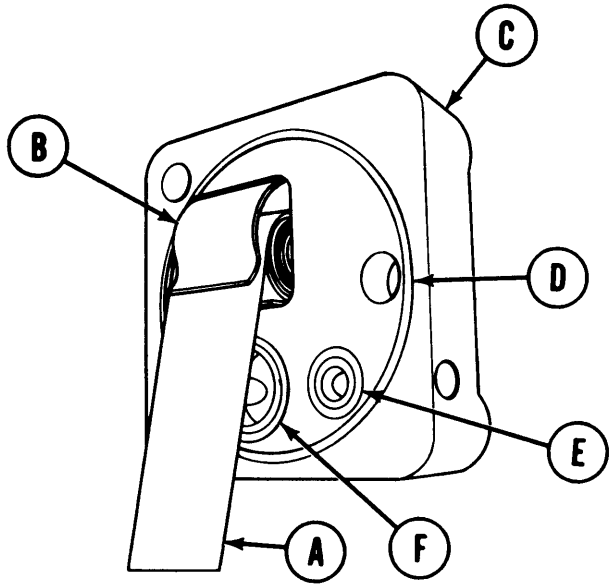

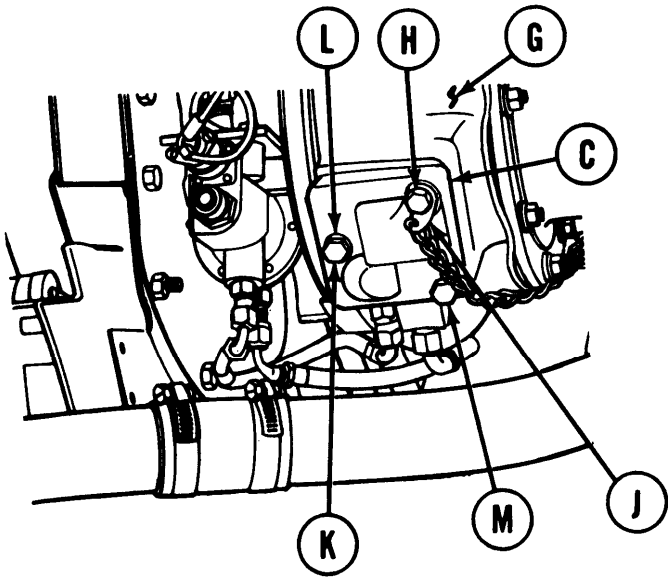

5. Install screw and washer (H) through chain fastener (J) and cover (C).

6. Install screw (K) and new packing with retainer (L).

7. Install screw and washer (M).

8. Using 1/2 inch wrench, tighten screws (H), (K), and (M).

9. Perform operational test (page 10-298.17).

End of Task

SERVICE DUST DETECTOR FILTER STRIP (Sheet 1 of 2)

SUPPLIES: Pipe cleaner (Item 75, Appendix D)
Tubing, non-metallic (Item 78, Appendix D)
Wire, 0.030 inch diameter (Item 63, Appendix D)
Cloth (Item 12, Appendix D)
Dry cleaning solvent (Item 55, Appendix D)
Goggles (Item 70, Appendix D)
Rubber gloves (Item 69, Appendix D)

PRELIMINARY PROCEDURE: Remove dust detector filter strip and cover (page 7-130.11)

SERVICE:

WARNING

Dry cleaning solvent P-D-680 is toxic and flammable. Wear protective goggles and gloves and use only in a well-ventilated area. Avoid contact with skin, eyes, and clothes and don't breathe vapors. Do not use near open flame or excessive heat. The flash point for Type #1 Dry Cleaning Solvent is 100°F (38°C) and for Type #2 is 138°F (50°C). If you become dizzy while using cleaning solvent, get fresh air immediately and get medical aid. If contact with eyes is made, wash your eyes with water and get medical aid immediately.

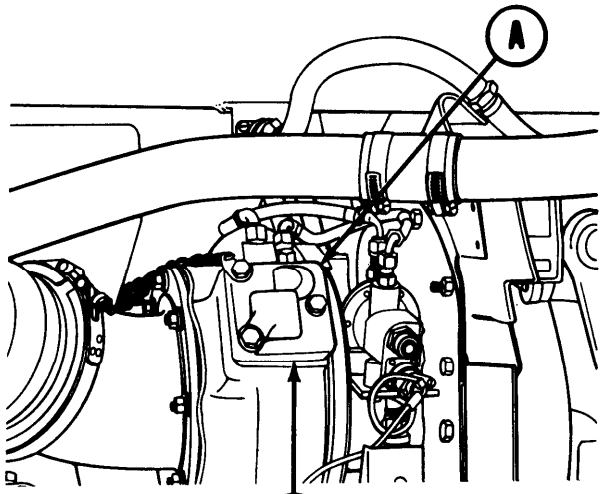

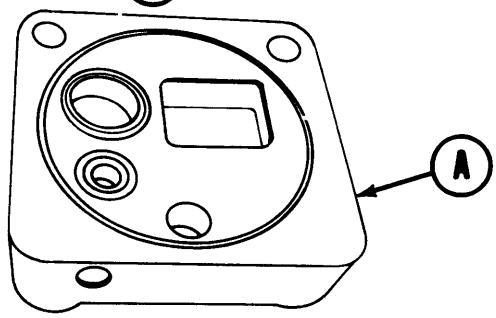

1. Using clean cloth dampened with cleaning solvent , clean cover (A) and mounting face of compressor housing (B).

2. Inspect compressor housing chamber (C) for contamination. Clean chamber (C) as required.

3. Using pipe cleaner clean compressor housing orifice chamber (C). Use wire to clean orifice (D). Blow out chamber (C) and orifice (D) by mouth, using a short piece of tubing.

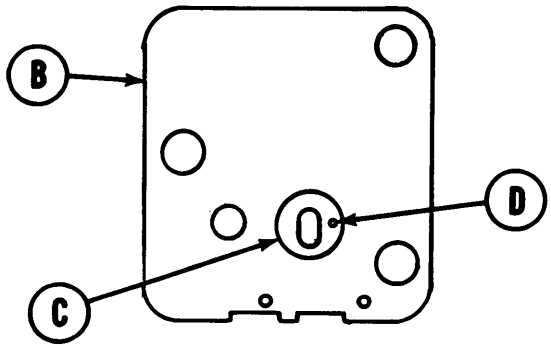

Go on to Sheet 2

SERVICE DUST DETECTOR FILTER STRIP (Sheet 2 of 2)

4. Blow out (by mouth) compressor housing hole (E).

5. Inspect cover chamber (F) for contamination. Clean chamber (F) as required.

6. Using pipe cleaner, clean drilled holes (G) and blow out (by mouth).

7. Install dust detector filter strip and cover (page 7-130.13).

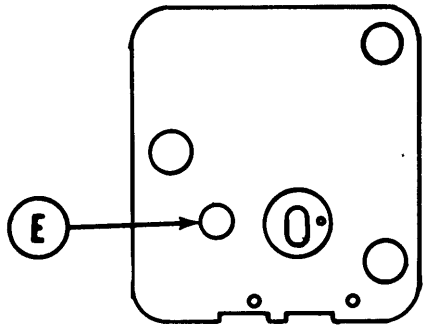

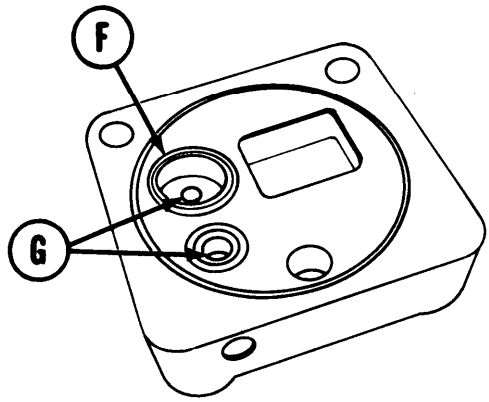

End of Task

AIR PRESSURE HOSE ASSEMBLIES REPLACEMENT (Sheet 1 of 2)

TOOLS: 9/16 in. combination box and open end wrench (2 required)
5/8 in. combination box and open end wrench (2 required)

NOTE

Replacement of the left side air pressure hose assemblies will require removal of the top deck.

REFERENCE: TM 5-5420-202-10

PRELIMINARY PROCEDURES: Open top deck grille doors (TM 5-5420-202-20-2)
For left side only, remove top deck (page 16-21)

REMOVAL:

1. Using one 9/16 inch wrench to hold adapters (A), use other 9/16 inch wrench to disconnect hose assembly (B) from adapters (A). Remove hose assembly (B).

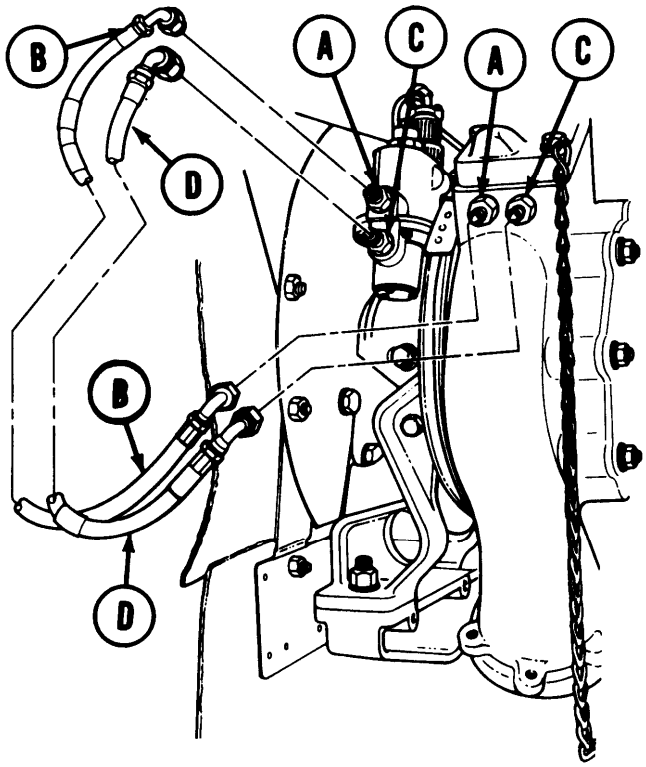

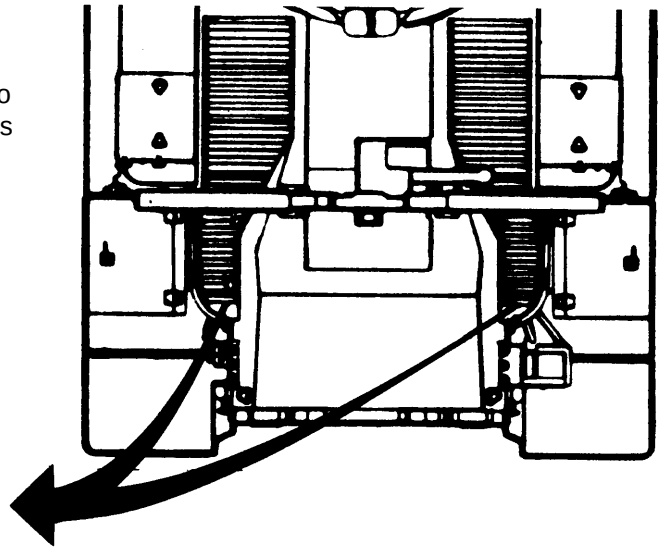

2. Using one 5/8 inch wrench to hold adapters (C), use other 5/8 inch wrench to disconnect hose assembly (D) from adapters (C). Remove hose assembly (D).

Go on to Sheet 2

AIR PRESSURE HOSE ASSEMBLIES REPLACEMENT (Sheet 2 of 2)

INSTALLATION:

1. Connect hose assembly (A) to adapters (B). Using 5/8 inch wrench, tighten hose assembly (A) onto adapters (B).
2. Connect hose assembly (C) to adapters (D). Using 9/16 inch wrench, tighten hose assembly (C) onto adapter (D).
3. For left side only, install top deck (page 16-23).
4. Close top deck grille doors (TM 5-5420-202-10).

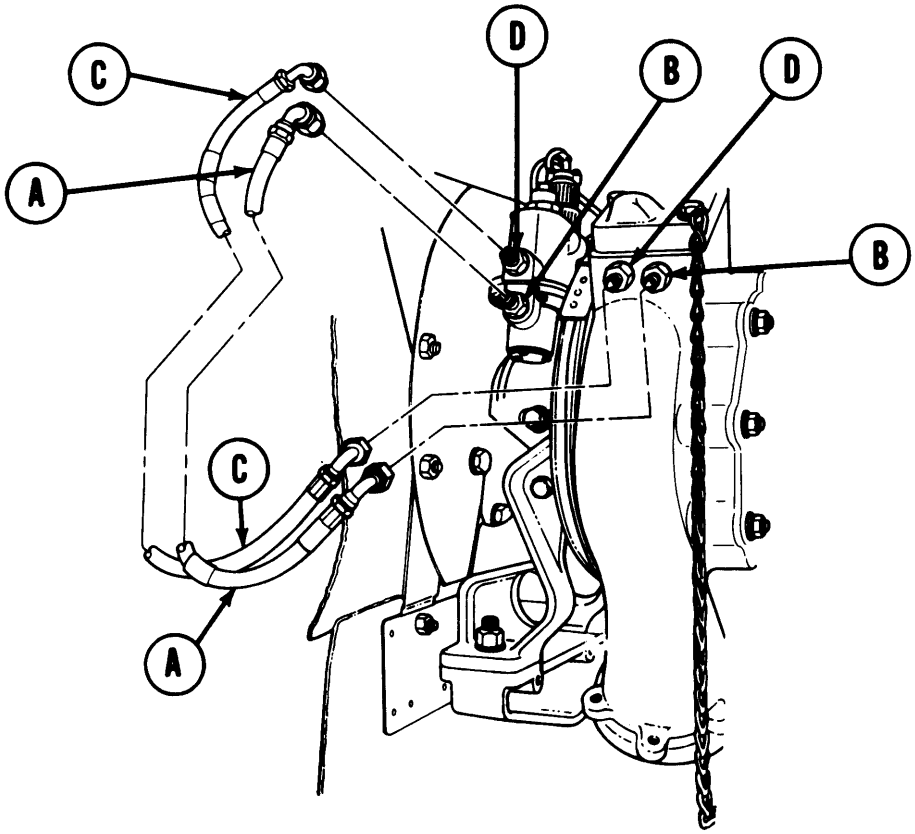

End of Task

CONDENSATE RELIEF VALVE REPLACEMENT (LEFT OR RIGHT) (Sheet 1 of 2)

TOOLS: 15/16 in. socket with 1/2 in. drive
1-3/4 in. open end wrench
6 in. ruler
Slip joint pliers
Ratchet with 1/2 in. drive
Flat-tip screwdriver

SUPPLIES: Dry cleaning solvent (Item 55, Appendix D)
Preformed packing
Rags (Item 65, Appendix D)
Gloves (Item 69, Appendix D)
Goggles (Item 70, Appendix D)

REFERENCE: TM 5-5420-202-10

PRELIMINARY PROCEDURE: Open top deck grille doors (TM 5-5420-202-10)

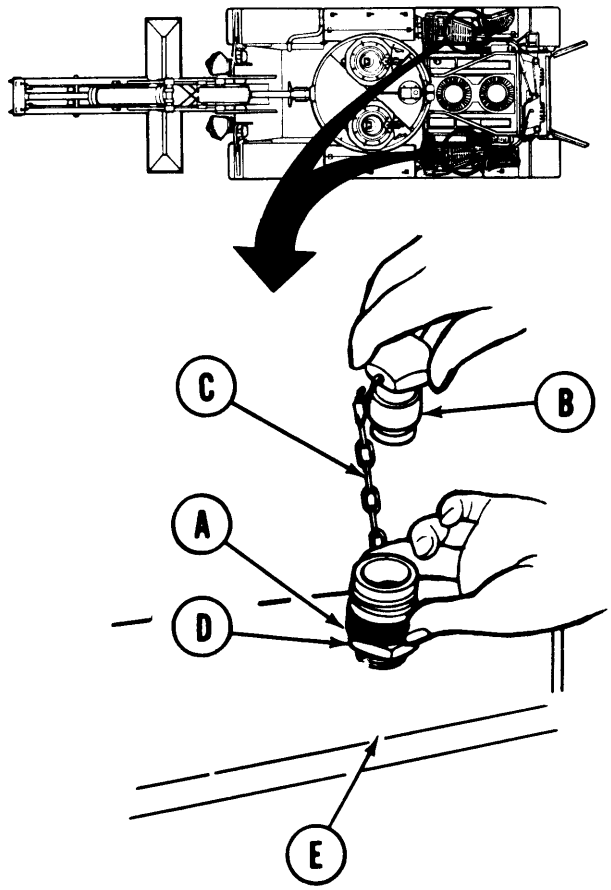

REMOVAL:

1. Press down on connector sleeve (A) and remove plug (B).

2. Using slip joint pliers, remove chain (C) from plug (B).

3. Using 1-3/4 inch wrench, remove pipe adapter (D) from fuel tank (E). Cover fuel tank opening (E) with clean rags.

4. Press and hold down connector sleeve (A). Using screwdriver, remove retaining ring (F) by pulling out.

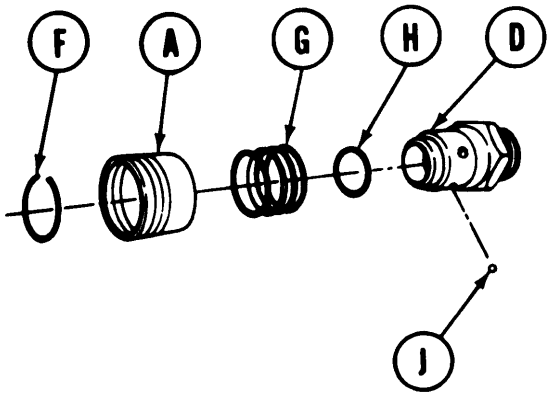

5. Remove connector sleeve (A), spring (G), preformed packing (H), and three ball bearings (J) from pipe adapter (D). Throw preformed packing (H) away.

Go on to Sheet 2

CONDENSATE RELIEF VALVE REPLACEMENT (LEFT OR RIGHT) (Sheet 2 of 2)

CLEANING AND INSPECTION:

Dry cleaning solvent P-D-680 is toxic and flammable. To prevent personal injury, wear protective goggles and gloves and use only in a well-ventilated area. Avoid contact with skin, eyes, and clothes and don't breathe vapors. Do not use near open flame or excessive heat. The flash point for Type #1 Dry Cleaning Solvent is 100°F (38°C) and for Type #2 is 138°F (50°C). If you become dizzy while using cleaning solvent, get fresh air immediately and get medical aid. If contact with eyes is made, wash your eyes with water and get medical aid immediately.

1. Using dry cleaning solvent and rags clean all components.

2. Inspect components for cracks or breaks. Replace unserviceable components.

3. Using 6 inch ruler as measure, replace spring if free length is less than 1 inch.

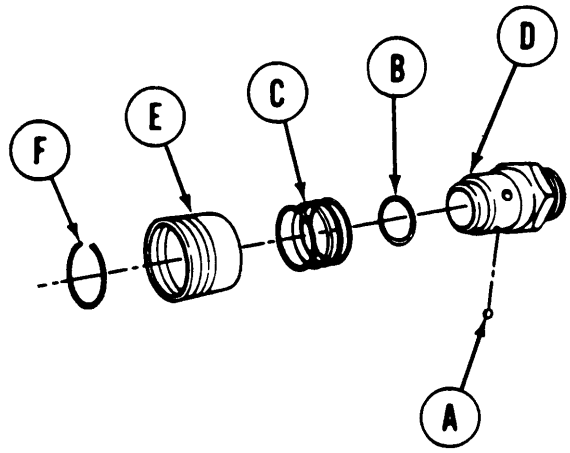

INSTALLATION:

1. Position three ball bearings (A), new preformed packing (B), and spring (C) on pipe adapter (D).

2. Press connector sleeve (E) down on pipe adapter (D). Using pliers, install retaining ring (F).

3. Remove rags from fuel tank.

4. Using 1-3/4 inch wrench, install pipe adapter (D) in fuel tank (G).

5. Press down on connector sleeve (E) and install plug (H).

6. Using slip joint pliers, install chain (J) on plug (H).

7. Close top grille doors (TM 5-5420-202-10).

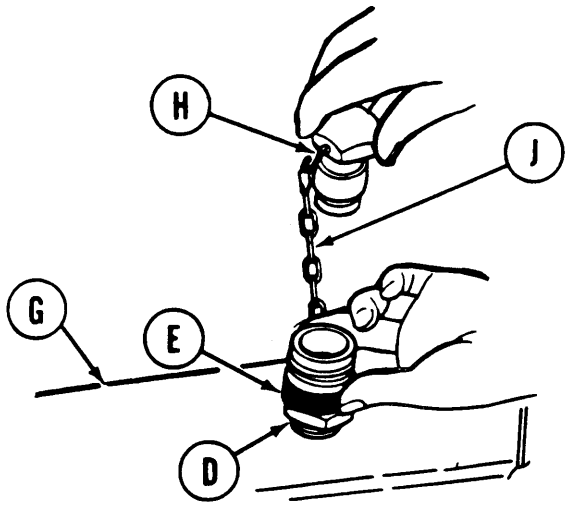

End of Task

RIGHT FUEL TANK FILLER REPAIR (Sheet 1 of 6)

PROCEDURE INDEX

PROCEDURE	PAGE
Removal	7-133
Cleaning and Inspection	7-136
Installation	7-137

TOOLS: 3/16 in. socket head screw key (allen wrench)
7/8 in. socket with 1/2 in. drive
Ratchet with 1/2 in. drive
Putty knife
Diagonal cutting pliers
Slip joint pliers
Flat-tip screwdriver

SUPPLIES: Dry cleaning solvent (Item 55, Appendix D)
Lint free cloth (Item 12, Appendix D)
Gasket (2 required)
Wire (Item 61, Appendix D)
Gloves (Item 69, Appendix D)
Goggles (Item 70, Appendix D)

REMOVAL:

1. Using 7/8 inch socket, loosen fuel filler cover lockscrew (A).

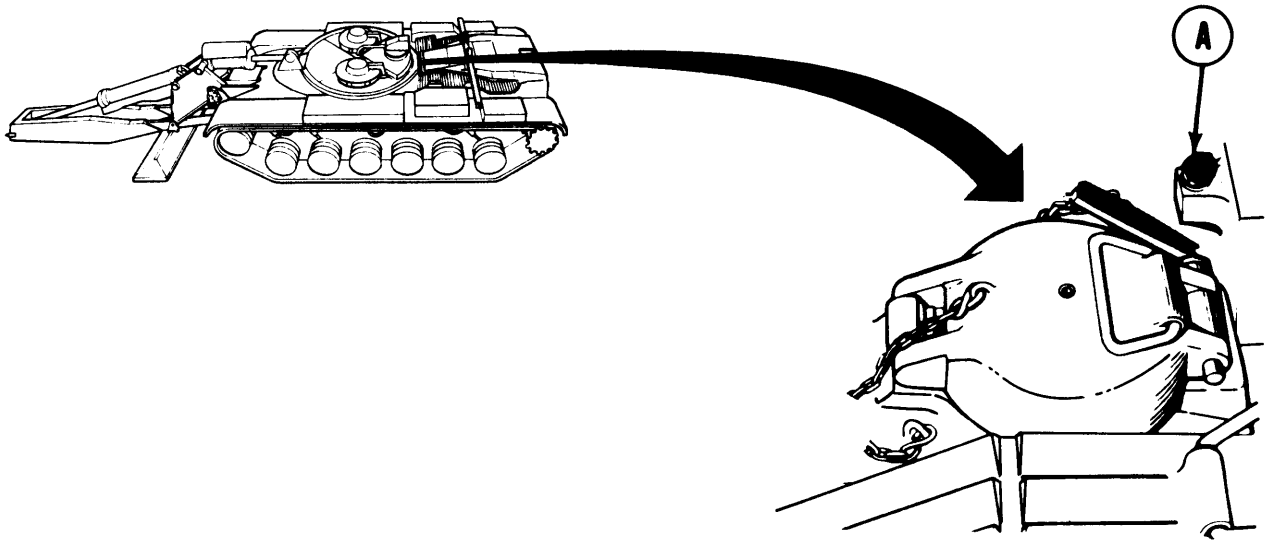

TA248257

RIGHT FUEL TANK FILLER REPAIR (Sheet 2 of 6)

2. Remove lockpin (B) securing fuel filler cover (C).

3. Pull up and out to remove fuel filler cover (C) to gain access to fuel tank filler.

4. Rotate filler cap (D) 1/4 turn left and remove from filler neck (E).

5. Disconnect filler cap retaining chain (F) from filler neck (E).

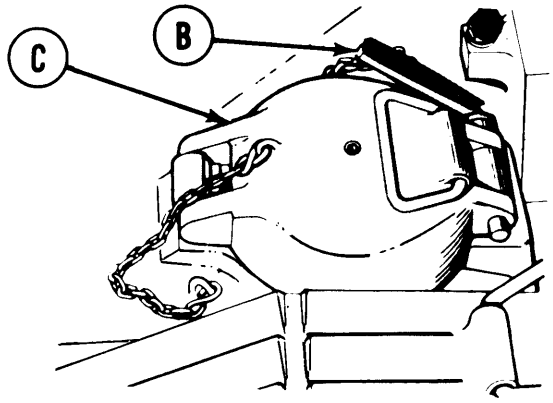

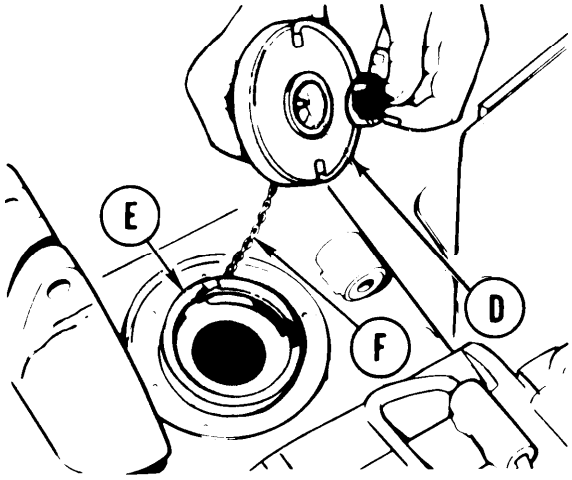

Go on to Sheet 3

TA248258

RIGHT FUEL TANK FILLER REPAIR (Sheet 3 of 6)

6. Using screwdriver, remove eight screws (G) securing filler neck seal assembly (H) between filler neck (E) and hull.

7. Remove filler neck seal washer (J), two gaskets (K and L) and neck washer (M) from between filler neck (E) and hull.

8. Throw away gaskets (K) and (L).

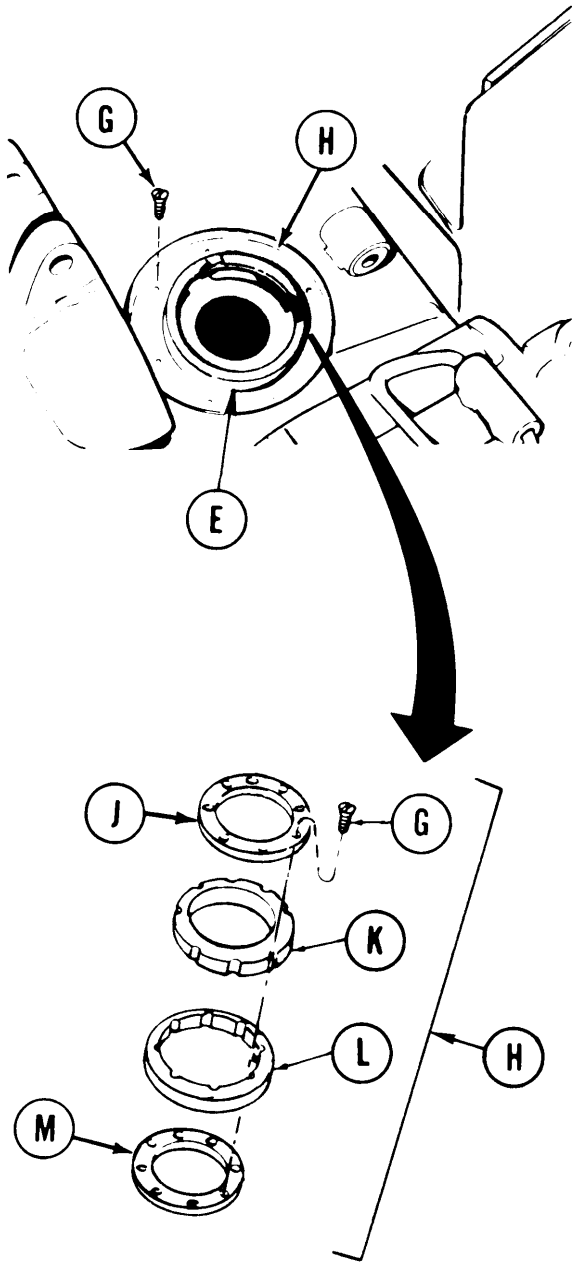

Go on to Sheet 4

TA248259

RIGHT FUEL TANK FILLER REPAIR (Sheet 4 of 6)

9. If required, use diagonal cutting pliers to remove lockwire (N) securing screws (P).

10. Using allen wrench, remove eight screws (P) securing filler neck (E) to fuel tank (Q).

11. Remove filler neck (E) from fuel tank (Q).

12. Remove strainer element (R) from fuel tank (Q).

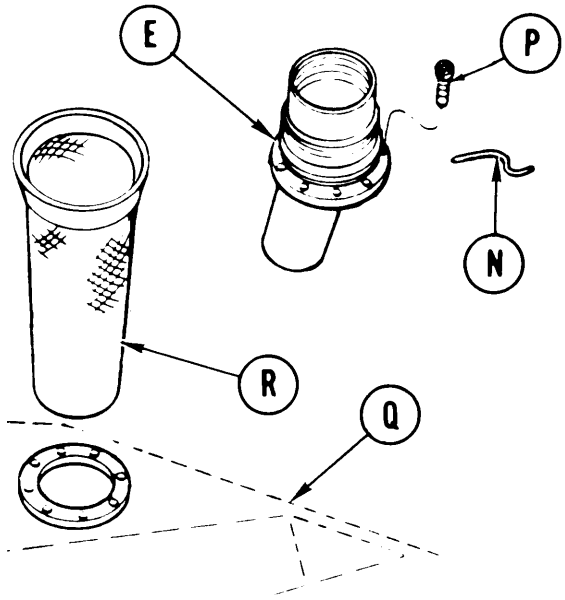

CLEANING:

WARNING

Dry cleaning solvent P-D-680 is toxic and flammable. To prevent personal injury, wear protective goggles and gloves and use only in a well-ventilated area Avoid contact with skin, eyes, and clothes and don't breathe vapors. Do not use near open flame or excessive heat. The flash point for Type #1 Dry Cleaning Solvent is 100°F (38°C) and for Type #2 is 138°F (50°C). If you become dizzy while using cleaning solvent, get fresh air immediately and get medical aid. If contact with eyes is made, wash your eyes with water and get medical aid immediately.

1. Using dry cleaning solvent, clean strainer (R).

2. Using putty knife, dry cleaning solvent, and lint-free cloth, clean around filler hole area of fuel tank (S).

INSPECTION:

Inspect strainer (R) for contamination or damage. Replace strainer (R) if unserviceable.

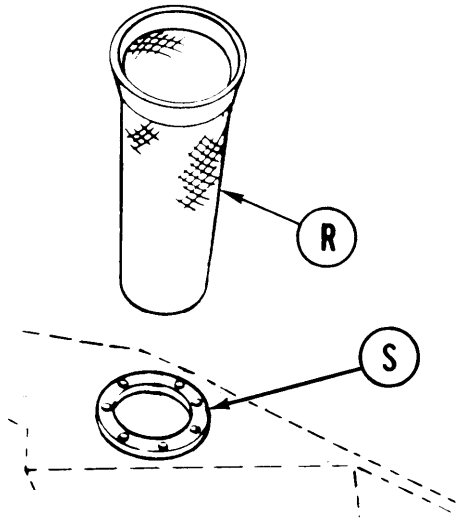

TA248260

Go on to Sheet 5

RIGHT FUEL TANK FILLER REPAIR (Sheet 5 of 6)

INSTALLATION:

1. Install strainer (A) in fuel tank (B).

2. Install filler neck (C) on fuel tank (B).

3. Using allen wrench, secure filler neck (C) to fuel tank (B) using eight screws (D).

4. If required, use slip joint pliers and install lockwire (E) in eight screws (D).

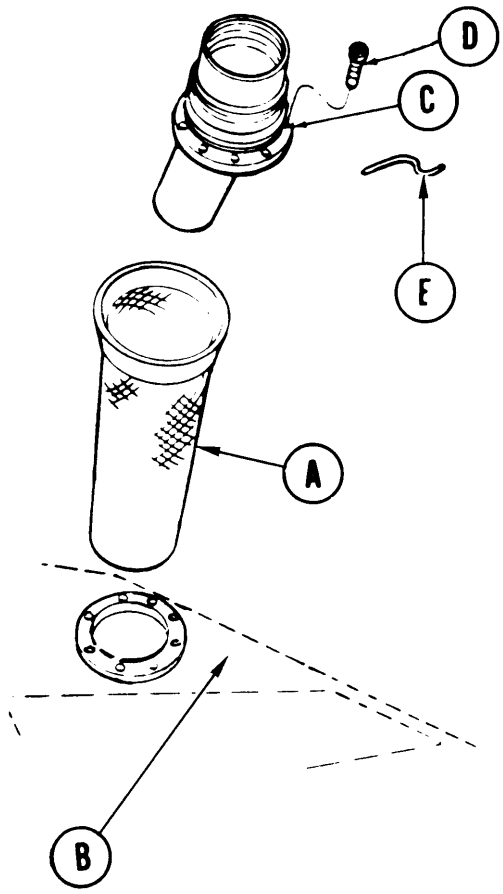

5. Using two new gaskets (F) and (G), assemble seal assembly (H) and tighten screws (J) finger tight.

6. Install seal assembly (H) on filler neck and, while holding filler neck in position, tighten screws (J) until gaskets (F) and (G) are compressed to form tight seal between filler neck and hull.

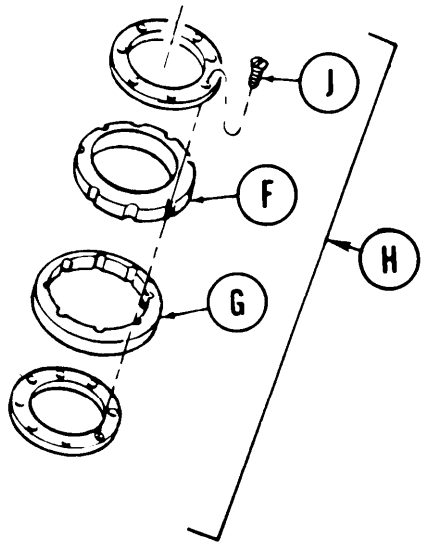

Go on to Sheet 6

TA248261

RIGHT FUEL TANK FILLER REPAIR (Sheet 6 of 6)

7. Connect filler cap retaining chain (K) to filler neck (C).

8. Install filler cap (L) and rotate cap 1/4 turn right to secure to filler neck (C).

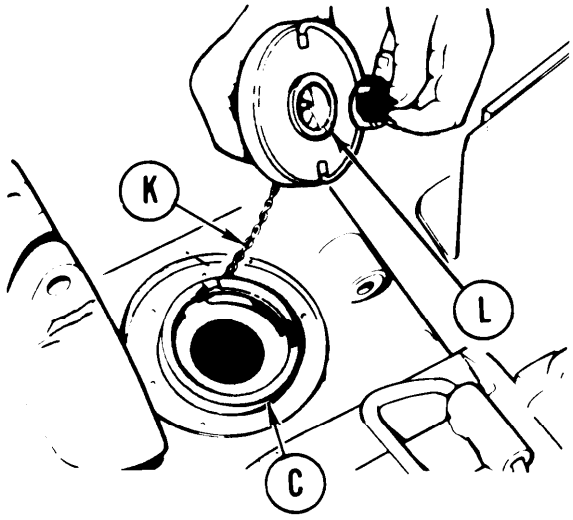

9. Close fuel filler cover (M) and secure with lockpin (N).

10. Using socket, tighten lock screw (P).

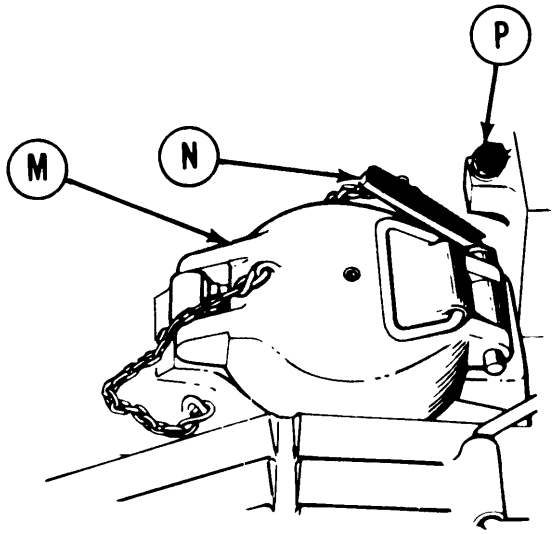

End of Task

TA248262

LEFT FUEL TANK EMERGENCY FILLER REPAIR (Sheet 1 of 2)

TOOLS: 7/16 in. socket with 1/2 in. drive
Ratchet with 1/2 in. drive
Diagonal cutting pliers
Slip joint pliers
Putty knife

SUPPLIES: Dry cleaning solvent (Item 55, Appendix D)
Lint-free cloth (Item 12, Appendix D)
Gasket
Wire (Item 61, Appendix D)
Gloves (Item 69, Appendix D)
Goggles (Item 70, Appendix D)

REFERENCE: TM 5-5420-202-10

PRELIMINARY PROCEDURE: Open left top deck grille door assembly (TM 5-5420-202-10)

REMOVAL:

1. Using diagonal pliers, remove lockwire (A) from screws (B).

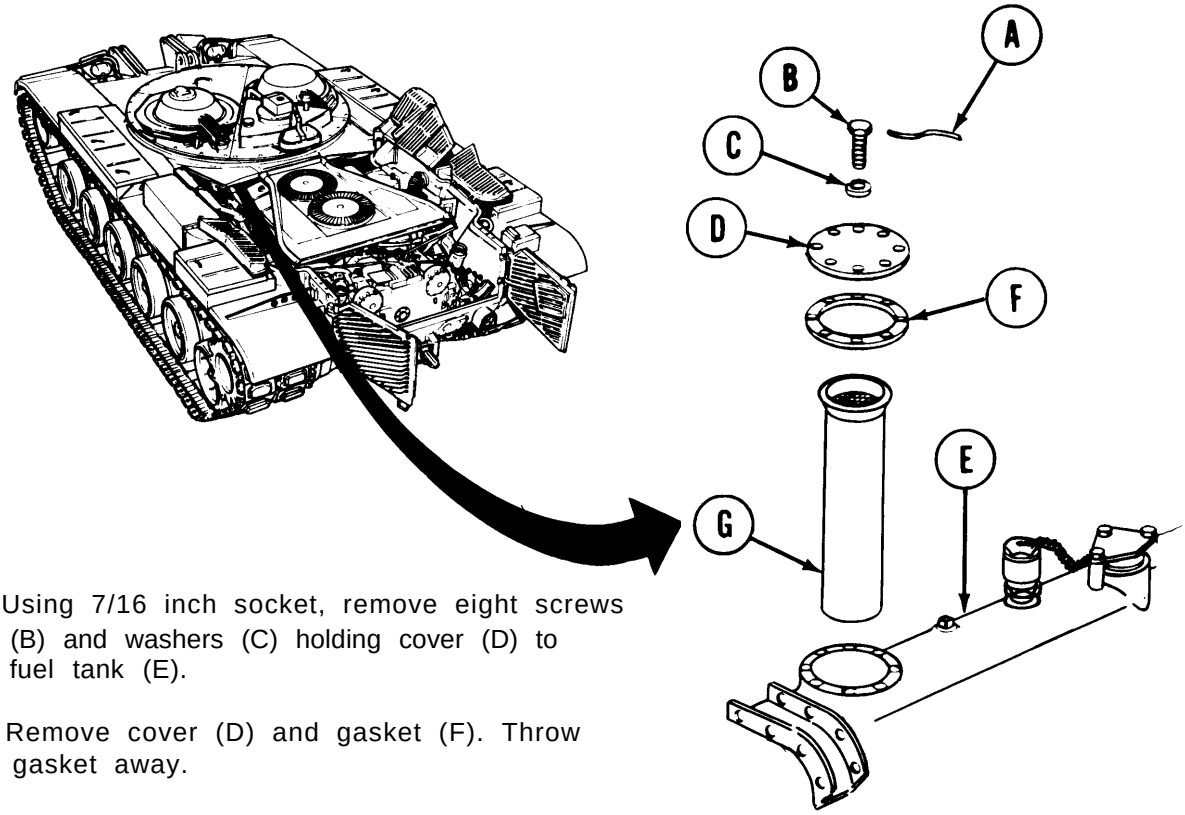

2. Using 7/16 inch socket, remove eight screws (B) and washers (C) holding cover (D) to fuel tank (E).

3. Remove cover (D) and gasket (F). Throw gasket away.

4. Lift out strainer (G) from fuel tank (E).

Go on to Sheet 2

TA248263

LEFT FUEL TANK EMERGENCY FILLER REPAIR (Sheet 2 of 2)

CLEANING AND INSPECTION:

WARNING

Cleaning agent specified is flammable. Use only in well ventilated areas. Keep away from flames, sparks, or heat. Do not smoke while using. Prevent contact with eyes, mouth, and/or skin. Wear rubber gloves when performing cleaning procedures.

1. Using dry cleaning solvent, clean strainer.
2. Using putty knife, dry cleaning solvent, and lint-free cloth, clean excess gasket material from fuel tank (A) and cover (B).
3. Inspect strainer (C) for contamination or damaged element. Replace strainer (C) if unserviceable.

INSTALLATION:

1. Install strainer (A) in fuel tank (B).
2. Install new gasket (C) and cover (D), using eight screws (E) and washers (F).
3. Using 7/16 inch socket, tighten eight screws (E).
4. Using slip joint pliers, install lockwire (G) through eight screws (E).
5. Close left top deck grille doors (TM 5-5420-202-10).

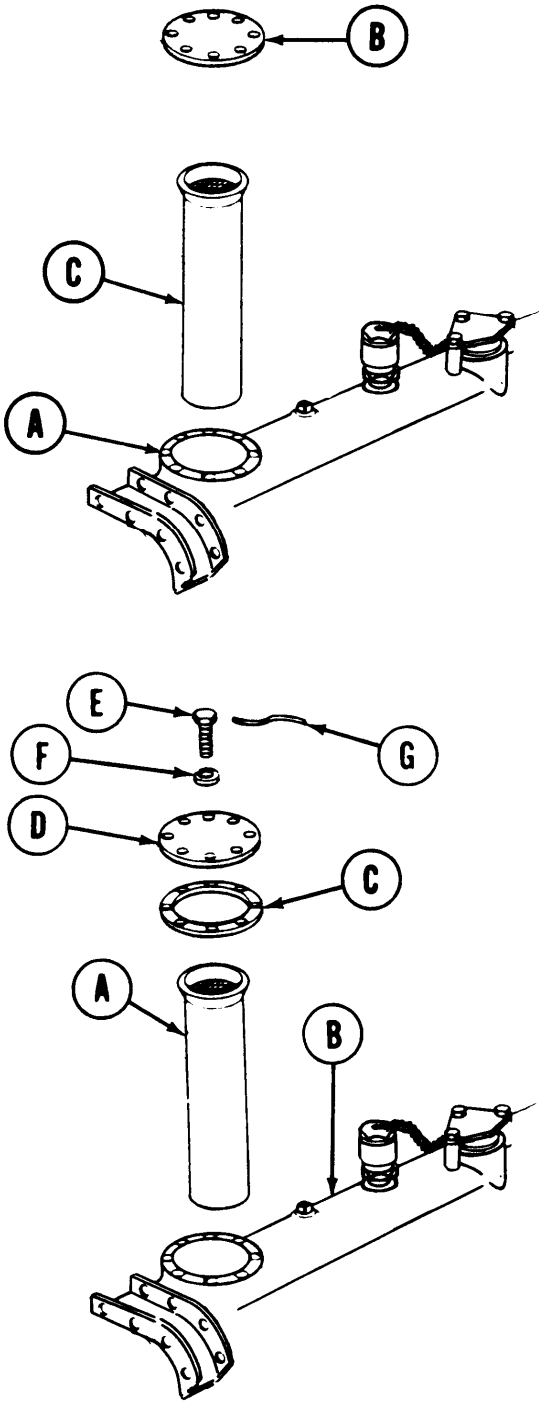

End of Task

TA248264

FUEL TANKS (LEFT AND RIGHT) LEVEL GAGE TRANSMITTER REPLACEMENT (Sheet 1 of 4)

PROCEDURE INDEX

PROCEDURE	PAGE
Removal	7-141
Installation	7-143

TOOLS: 7/16 in. open end wrench
7/16 in. socket with 1/2 in. drive
1/2 in. socket with 1/2 in. drive
Ratchet with 1/2 in. drive
Diagonal cutting pliers
Flat-tip screwdriver
Putty knife

SUPPLIES: Gasket
Lockwire (Item 61, Appendix D)
Rags (Item 12, Appendix D)
Lockwashers

REFERENCE: TM 5-5420-202-10

PRELIMINARY PROCEDURES: Launch bridge (TM 5-5420-202-10)
Open left or right top deck grille doors (TM 5-5420-202-10)

REMOVAL:

NOTE

This procedure applies to both the left and right fuel gage transmitters unless otherwise noted.

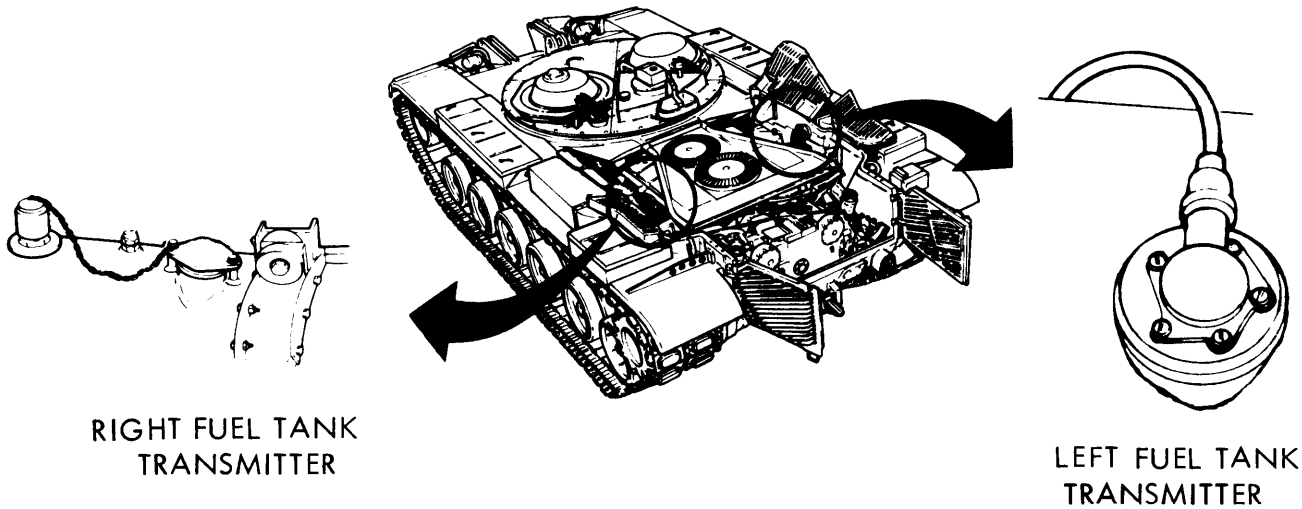

Go on to Sheet 2

TA248265

FUEL TANKS (LEFT AND RIGHT) LEVEL GAGE TRANSMITTER REPLACEMENT (Sheet 2 of 4)

NOTE

Steps 1 and 2 only apply to the left fuel gage transmitter.

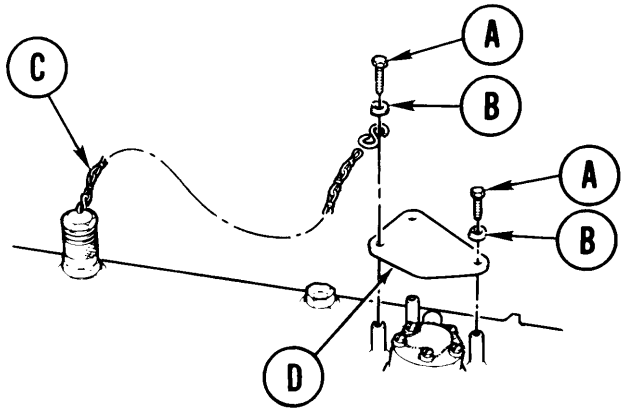

1. Using 1/2 inch socket, remove three bolts (A) and lockwashers (B) securing safety chain (C), and cover (D) to fuel tank.

2. Remove cover (D).

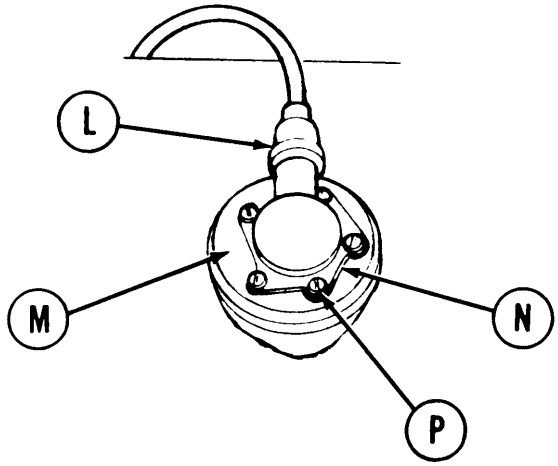

3. Disconnect electrical lead (E) from transmitter (F).

4. Using pliers, cut and remove lockwire (G).

5. Using screwdriver, remove five screws and washers (H) securing transmitter (F) to fuel tank.

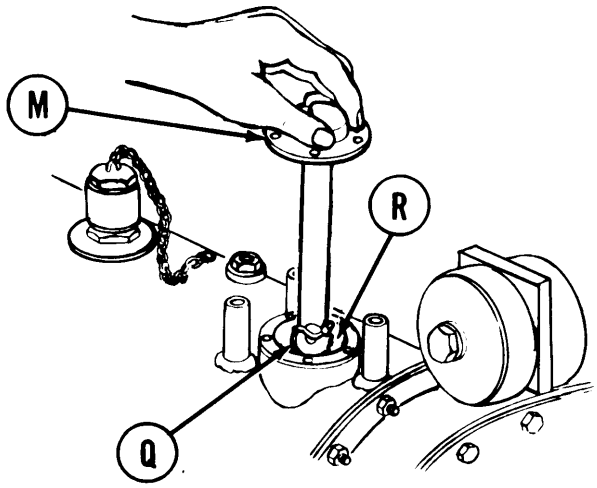

6. Carefully lift transmitter (F) out of fuel tank until float arm gears (J) are visible in fuel tank opening (K).

7. Reach in with finger and pull up on visible tip of float arm. Pull transmitter (F) out of tank opening (K) until float appears.

Go on to Sheet 3

TA248266

FUEL TANKS (LEFT AND RIGHT) LEVEL GAGE TRANSMITTER REPLACEMENT (Sheet 3 of 4)

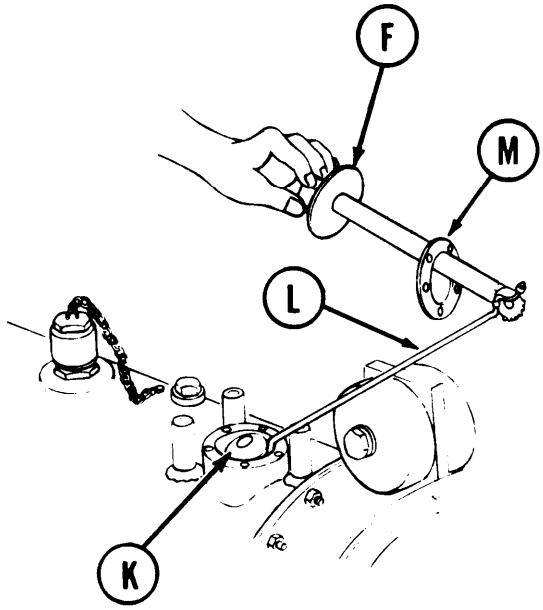

8. Tilt transmitter (F). Withdraw float arm (L) from fuel tank opening (K).

9. Using putty knife, remove gasket (M) from transmitter (F). Throw gasket (M) away.

10. Cover opening (K) with cloth to keep dirt out of fuel tank.

INSTALLATION:

NOTE

This procedure applies to both the left and right fuel gage transmitters unless otherwise noted.

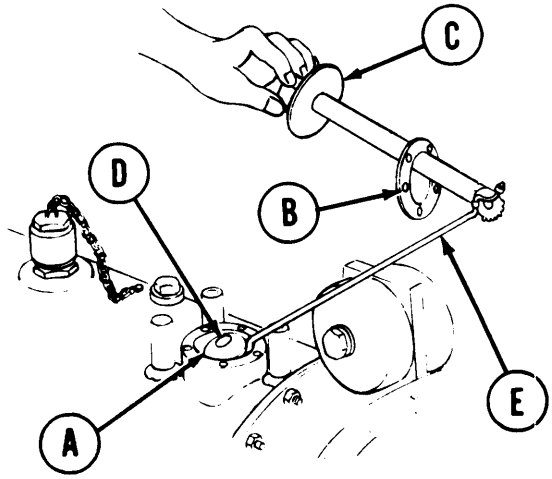

1. Remove cloth covering fuel tank opening (A).

2. Slip new gasket (B) onto transmitter (C).

3. Carefully work float (D) and float arm (E) into fuel tank opening (A).

4. Place gasket (B) in position on fuel tank opening (A).

5. Carefully lower transmitter (C) into position.

NOTE

Transmitter mounting holes are patterned so that the transmitter can only be installed with the electrical connector facing the hull wall.

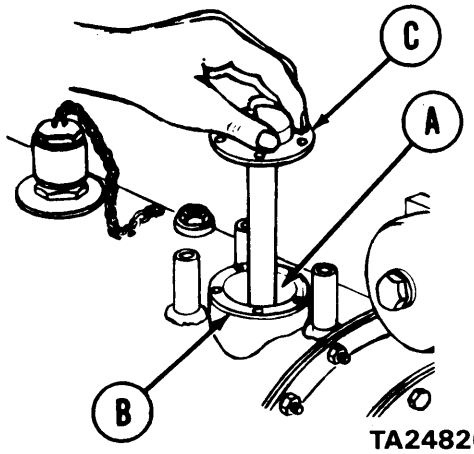

TA248267

Go on to Sheet 4

FUEL TANKS (LEFT AND RIGHT) LEVEL GAGE TRANSMITTER REPLACEMENT (Sheet 4 of 4)

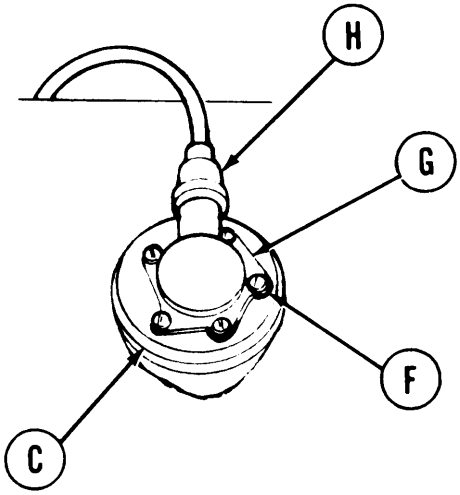

6. Using screwdriver, install five screws and washers (F) securing transmitter (C) to fuel tank.

7. Using slip joint pliers, secure screws (F) with lockwire (G).

8. Connect electrical connector (H) to transmitter (C).

9. Check fuel gage for proper operation (TM 5-5420-202-10).

NOTE

Steps 10 thru 12 apply only to the left fuel gage transmitter.

10. Place cover (J) in position over transmitter (C).

11. Position safety chain (K) on cover (J) and secure cover (J) with three bolts (L) and lockwashers (M).

12. Using 1/2 inch socket, tighten three bolts (L) securing cover (J) to fuel tank.

13. Check fuel gage for proper operation (TM 5-5420-202-10).

14. Close top deck grille door (TM 5-5420-202-10).

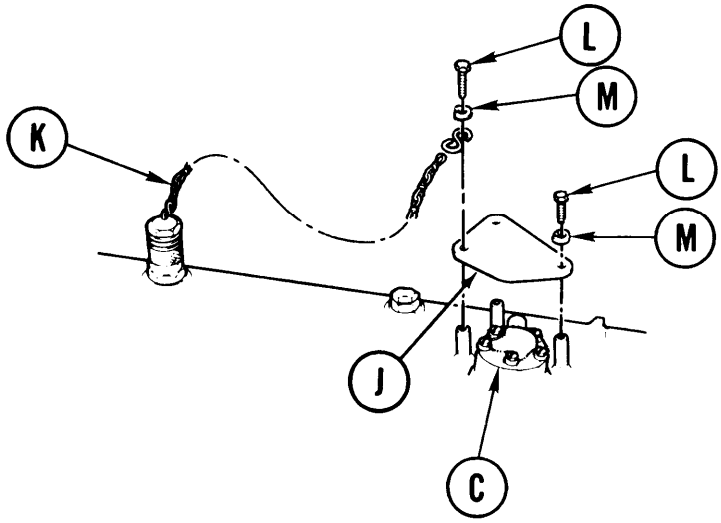

End of Task

TA248268

FUEL TANK BUTTERFLY VALVE REPLACEMENT (Sheet 1 of 7)

PROCEDURE INDEX

PROCEDURE	PAGE
Removal	7-145
Installation	7-148

TOOLS: 1/2 in. socket with 1/2 in. drive
1/2 in. combination box and open end wrench
Slip joint pliers
Diagonal cutting pliers
Putty knife
Torque wrench with 1/2 in. drive (0-175 lb-ft) (0-238 N m)
Ratchet with 1/2 in. drive

SUPPLIES: Dry cleaning solvent (Item 55, Appendix D)
Rags (Item 65, Appendix D)
Gasket
Wire (Item 61, Appendix D)
Gloves (Item 69, Appendix D)
Goggles (Item 70, Appendix D)

PRELIMINARY PROCEDURES: Drain both fuel tanks (page 7-184)
Remove powerplant (page 5-2)

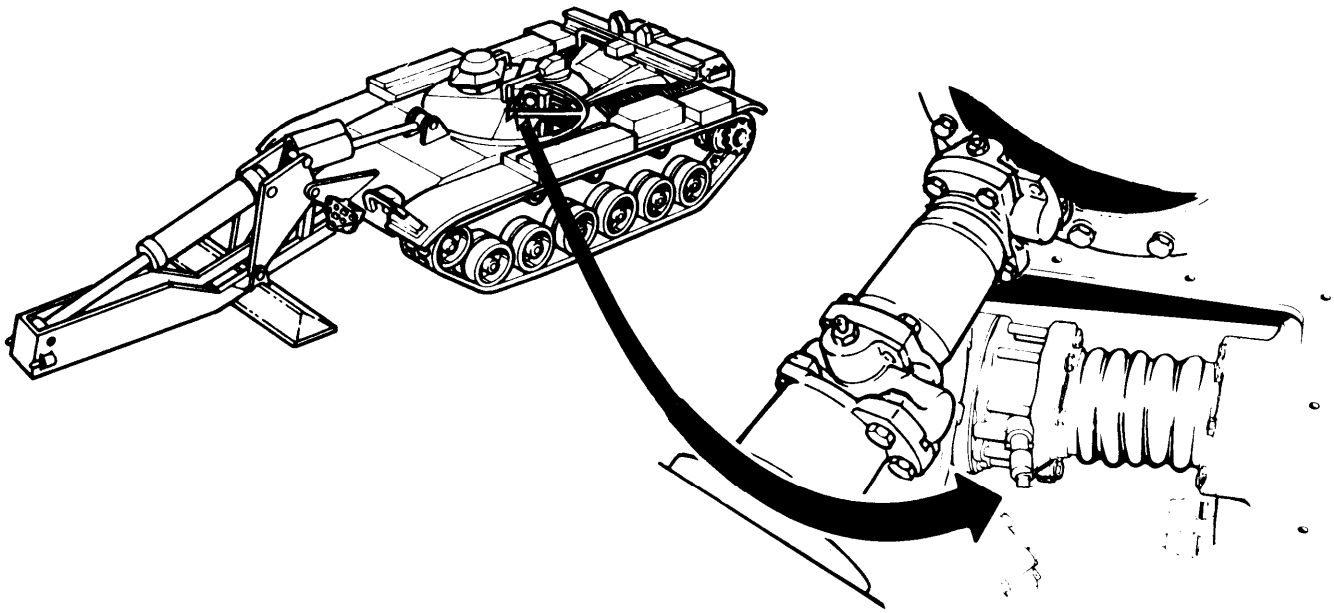

Go on to Sheet 2

TA248269

FUEL TANK BUTTERFLY VALVE REPLACEMENT (Sheet 2 of 7)

REMOVAL:

NOTE

Steps 1 through 4 are performed through crew compatment fuel crossover access.

1. Using cutting pliers, remove lockwire (A) from butterfly valve (B).

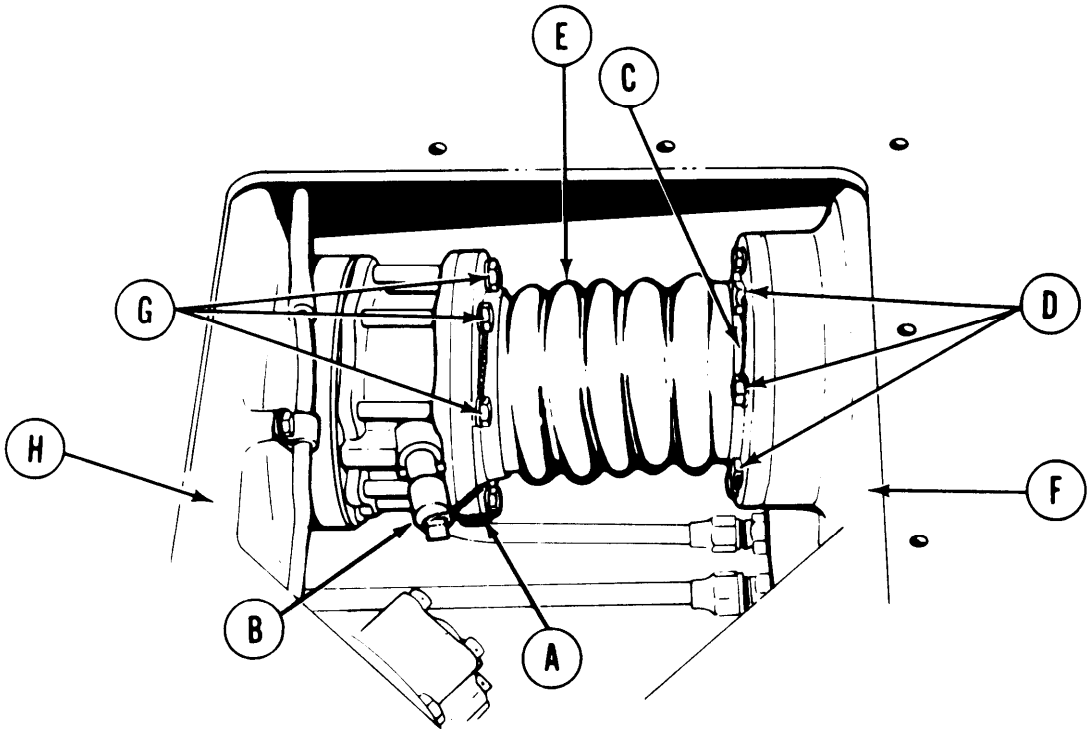

2. Using diagonal cutting pliers, remove lockwire (C) from three screws (D) holding preformed hose (E) to left fuel tank (F), and from three screws (G) holding preformed hose (E) to right fuel tank (H).

3. Using 1/2 inch wrench, remove three screws and washers (D) holding preformed hose (E) to left fuel tank (F).

4. Using 1/2 inch wrench, remove three screws and washers(G) holding valve (B) to right fuel tank (H).

Go onto Sheet 3

TA248270

FUEL TANK BUTTERFLY VALVE REPLACEMENT (Sheet 3 of 7)

NOTE
The remaining steps for removal of butterfly valve will be performed in engine compartment.

5. Using cutting pliers, remove lockwire (J) from five screws (K) holding preformed hose (E) to left fuel tank (F).

6. Using cutting pliers, remove lockwire (L) from five screws (M) holding valve (B) to right fuel tank (H).

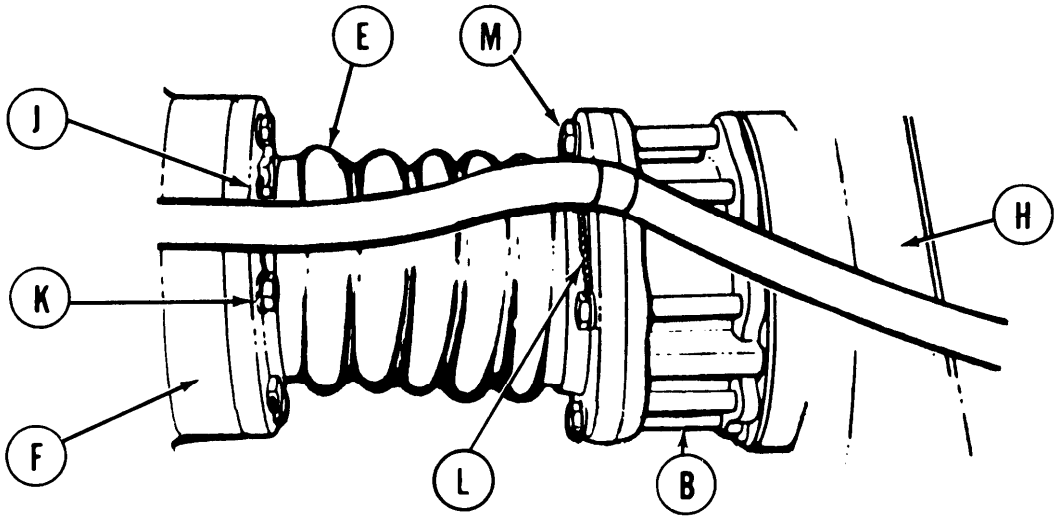

7. Using 1/2 inch wrench, remove five screws (K) holding preformed hose (E) to left fuel tank (F).

8. Using 1/2 inch wrench, remove five screws (M) holding valve (B) to right fuel tank (H).

9. Remove butterfly valve (B), preformed hose (E), and gasket from the vehicle. Discard gasket.

Go on to Sheet 4

TA248271

FUEL TANK BUTTERFLY VALVE REPLACEMENT (Sheet 4 of 7)

WARNING

Dry cleaning solvent P-D-680 is toxic and flammable. To prevent personal injury, wear protective goggles and gloves and use only in a well-ventilated area. Avoid contact with skin, eyes, and clothes and don't breathe vapors. Do not use near open flame or excessive heat. The flash point for Type #1 Dry Cleaning Solvent is 100°F (38°C) and for Type #2 is 138°F (50°C). If you become dizzy while using cleaning solvent, get fresh air immediately and get medical aid. If contact with eyes is made, wash your eyes with water and get medical aid immediately.

10. Using dry cleaning solvent, cloth and putty knife, clean excess material from fuel tank.

NOTE
The following steps of valve installation will be performed in engine compartment.

INSTALLATION:

1. Install new gasket (A), butterfly valve (B), and preformed hose (C) to right fuel tank (D) using five screws (E) and washers (F).

2. Install preformed hose (C) to left fuel tank (G) using five screws (H) and washers (J).

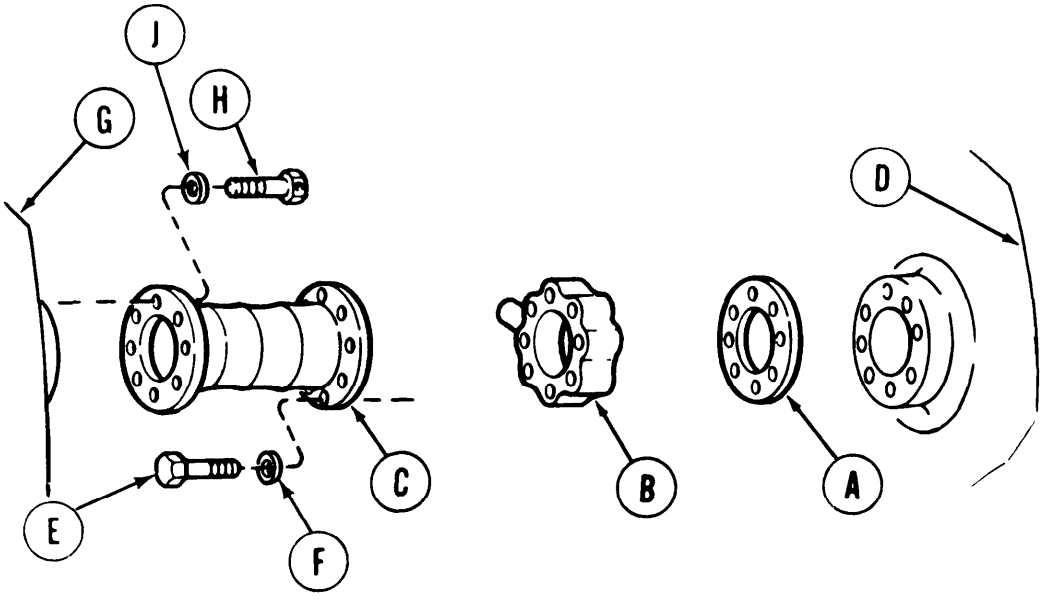

3. Using 1/2 inch wrench, loosely install five screws (E) and five screws (H).

Go on to Sheet 5

TA248272

FUEL TANK BUTTERFLY VALVE REPLACEMENT (Sheet 5 of 7)

NOTE

The following steps of valve installation will be performed through the butterfly valve access in crew compartment.

4. Install remaining three screws (E) and washers (F) holding butterfly valve (B) and preformed hose (C) to right fuel tank (D).

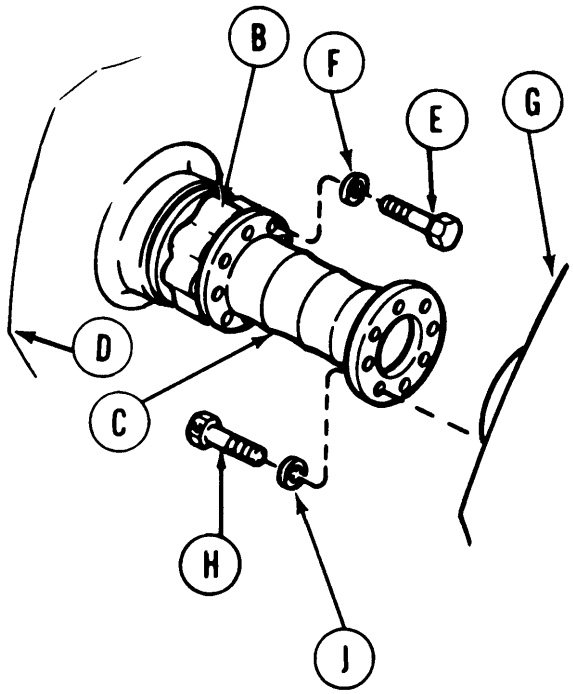

5. Install remaining three screws (H) and washer (J) holding preformed hose (C) to left fuel tank (G).

6. Using 1/2 inch wrench, tighten three screws (E) and three screws (H).

Go on to Sheet 6

TA248273

FUEL TANK BUTTERFLY VALVE REPLACEMENT (Sheet 6 of 7)

7. Using torque wrench, tighten three screws (E) and(H) to 13 lb-ft (18 N m).

8. Using slip joint pliers, install lockwire (K) in three screws (E) and (H).

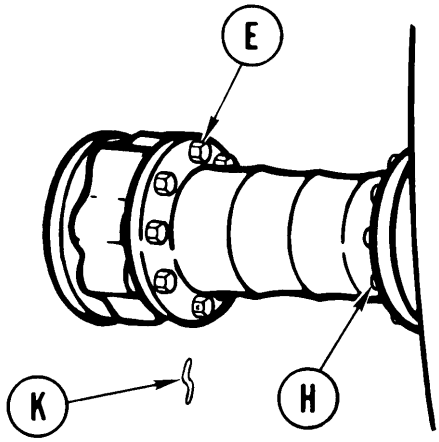

NOTE
The following steps of valve installation will be performed in engine compartment.

9. Using torque wrench, tighten the remaining five screws (E) and (H) to 13 lb-ft (18 N m).

10. Using slip joint pliers, install lockwire (K) in five screws (E) and (H).

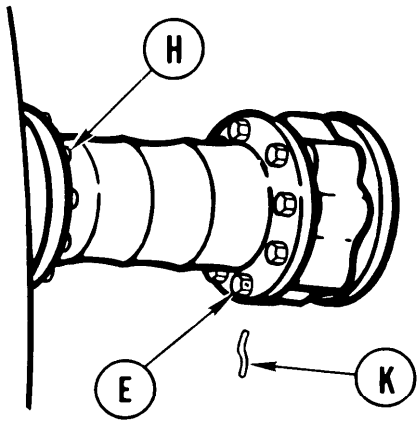

Go on to Sheet 7

TA248274

FUEL TANK BUTTERFLY VALVE REPLACEMENT (Sheet 7 of 7)

NOTE

The remaining steps of valve installation will be performed in crew compartment.

NOTE

Be sure valve is fully open (control lever rotated to maximum counterclockwise position) before installing lockwire.

11. Using slip joint pliers, install lockwire (K) to lock valve control (L).

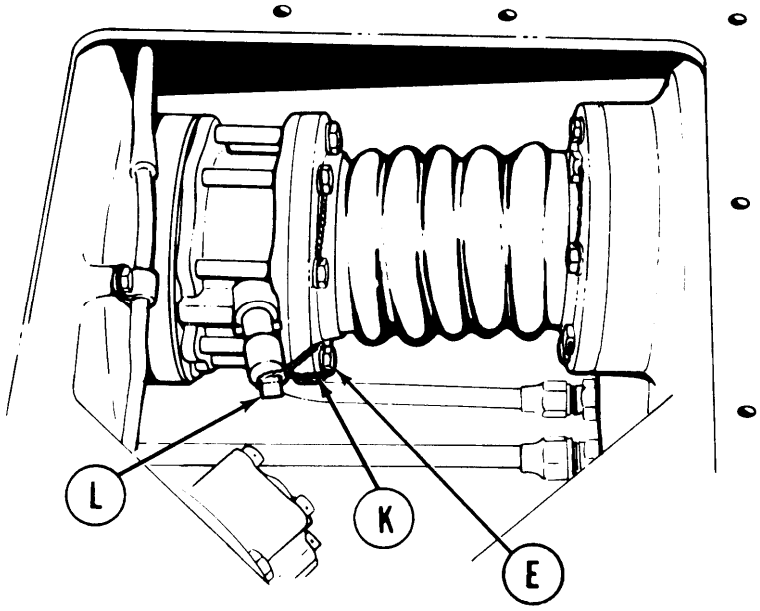

12. Service fuel tanks (TM 5-5420-202-10).

13. Install powerplant (page 5-14).

End of Task

TA248275

LEFT FUEL TANK JETTISON PIPE PLUG REPLACEMENT (Sheet 1 of 1)

TOOLS: 9/16 in. open end wrench

REFERENCE: TM 5-5420-202-10

PRELIMINARY PROCEDURE: Open top left grille doors (TM 5-5420-202-10)

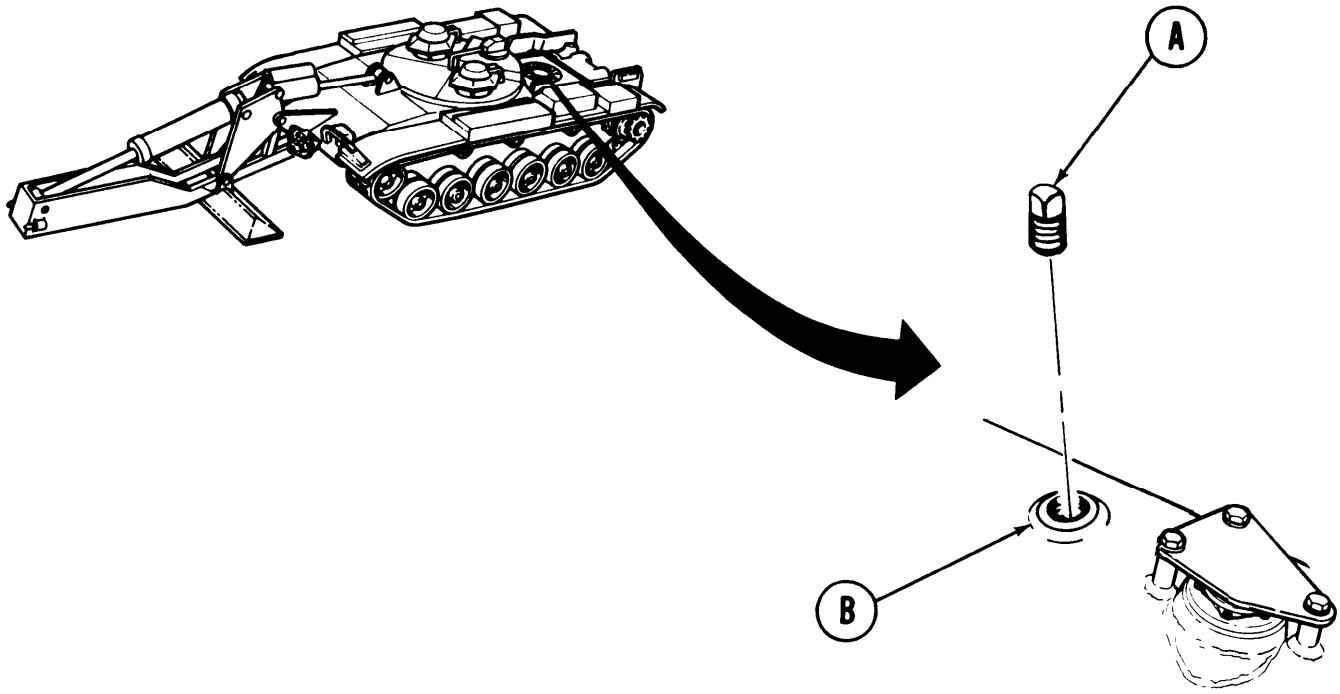

REMOVAL:

Using wrench, remove plug (A) from fuel tank (B).

INSTALLATION:

1. Using wrench, install plug (A) in fuel tank (B).
2. Close top left grille door (TM 5-5420-202-10).

End of Task

TA248276

BREATHER LINE REPLACEMENT (Sheet 1 of 5)

PROCEDURE INDEX

PROCEDURE	PAGE
Removal	7-153
Inspection	7-155
Installation	7-156

TOOLS: 7/16 in. socket with 1/2 in. drive
1-1/2 in. open end wrench (2 required)
1-5/16 in. open end wrench
Pipe wrench, 10 in.
Ratchet handle with 1/2 in. drive

SUPPLIES: Lockwashers

PRELIMINARY PROCEDURES: Remove powerplant (page 5-2)
Remove air cleaner intake hoses (page 7-65)

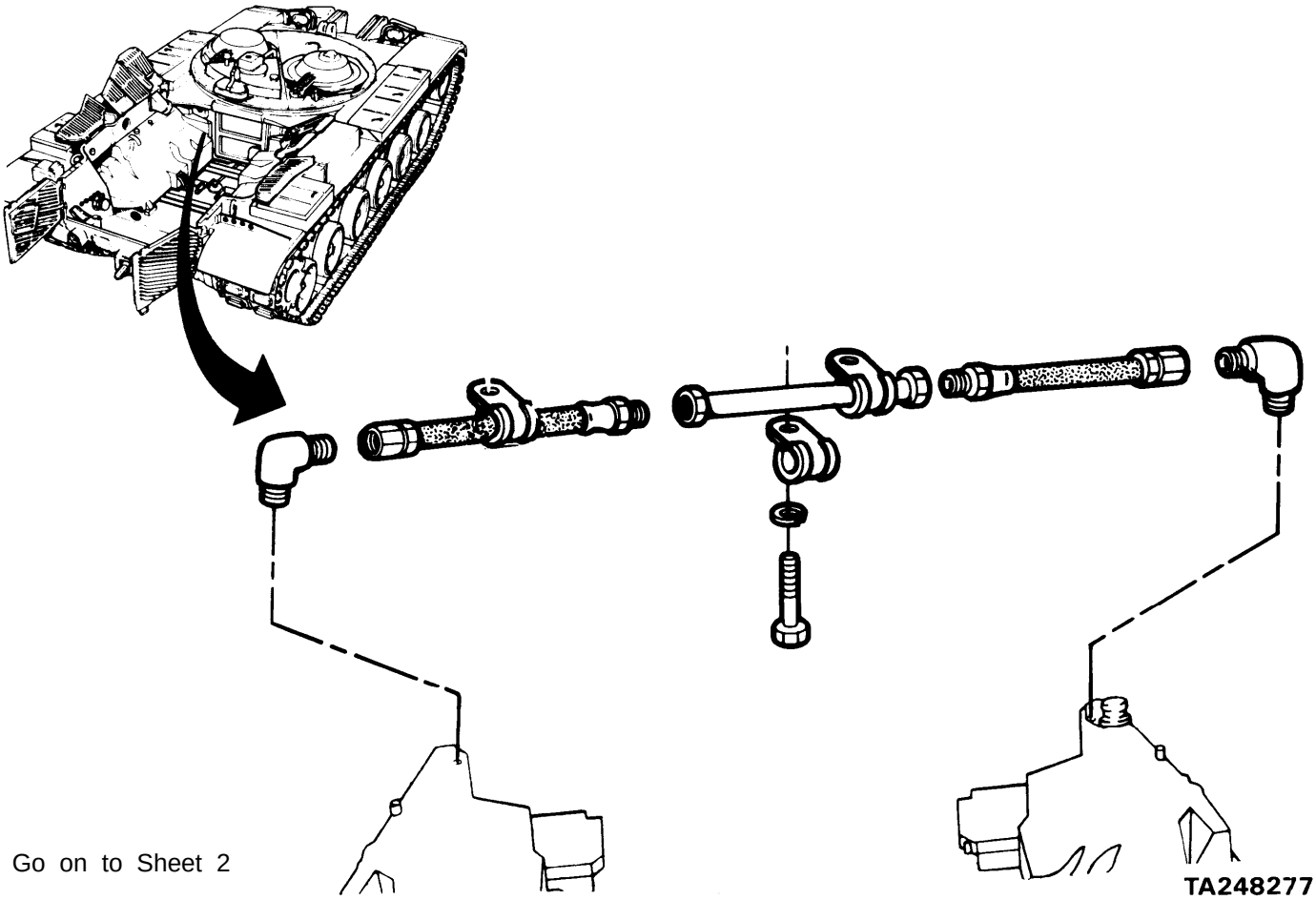

Go on to Sheet 2

BREATHER LINE REPLACEMENT (Sheet 2 of 5)

REMOVAL:

1. Using two 1-1/2 inch open end wrenches, disconnect connector (A) from connector (B) and connector (C) from connector (D).

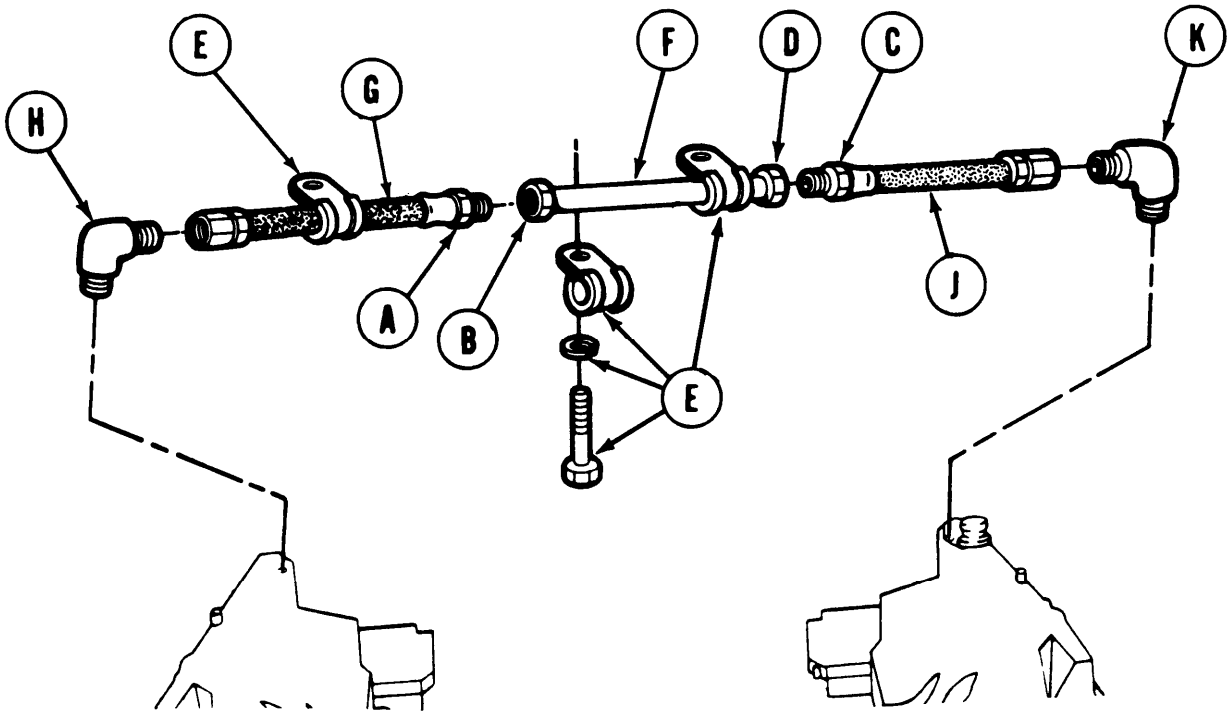

2. Using 7/16 inch socket, remove three screws, lockwashers, and loop clamps (E). Remove metal tube (F).

3. Using 1-1/2 inch open end wrench, disconnect hose (G) from elbow (H) and hose (J) from elbow (K).

TA248278

Go on to Sheet 3

BREATHER LINE REPLACEMENT (Sheet 3 of 5)

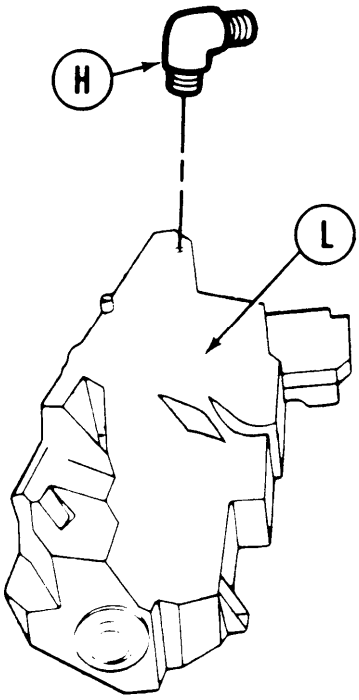

NOTE

It may be necessary to use a pipe wrench.

4. Using 1-5/16 inch open end wrench, remove elbow (H) from left fuel tank (L) and elbow (K) from right tank (M).

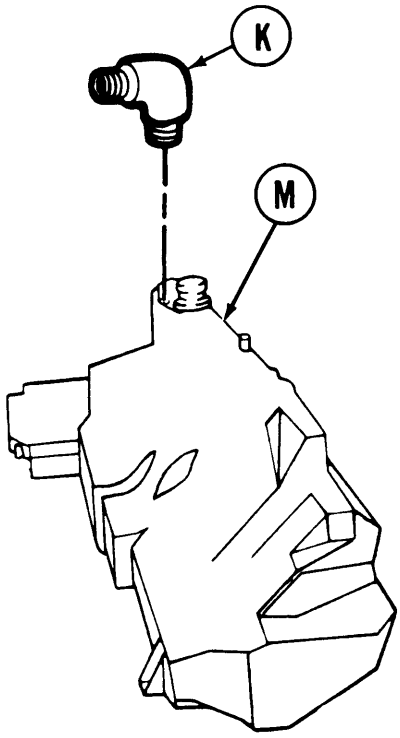

INSPECTION:

1. Check all hoses for cracks and holes.
2. Check all hose connections for tightness and stripped threads.
3. Replace parts as needed.

Go on to Sheet 4

TA248279

BREATHER LINE REPLACEMENT (Sheet 4 of 5)

INSTALLATION:

1. Using 1-5/16 inch open end wrench, install two elbows (A) on left and right fuel tanks.
2. Using 1-1/2 inch open end wrench, install two rubber breather hoses (B) on each elbow (A).

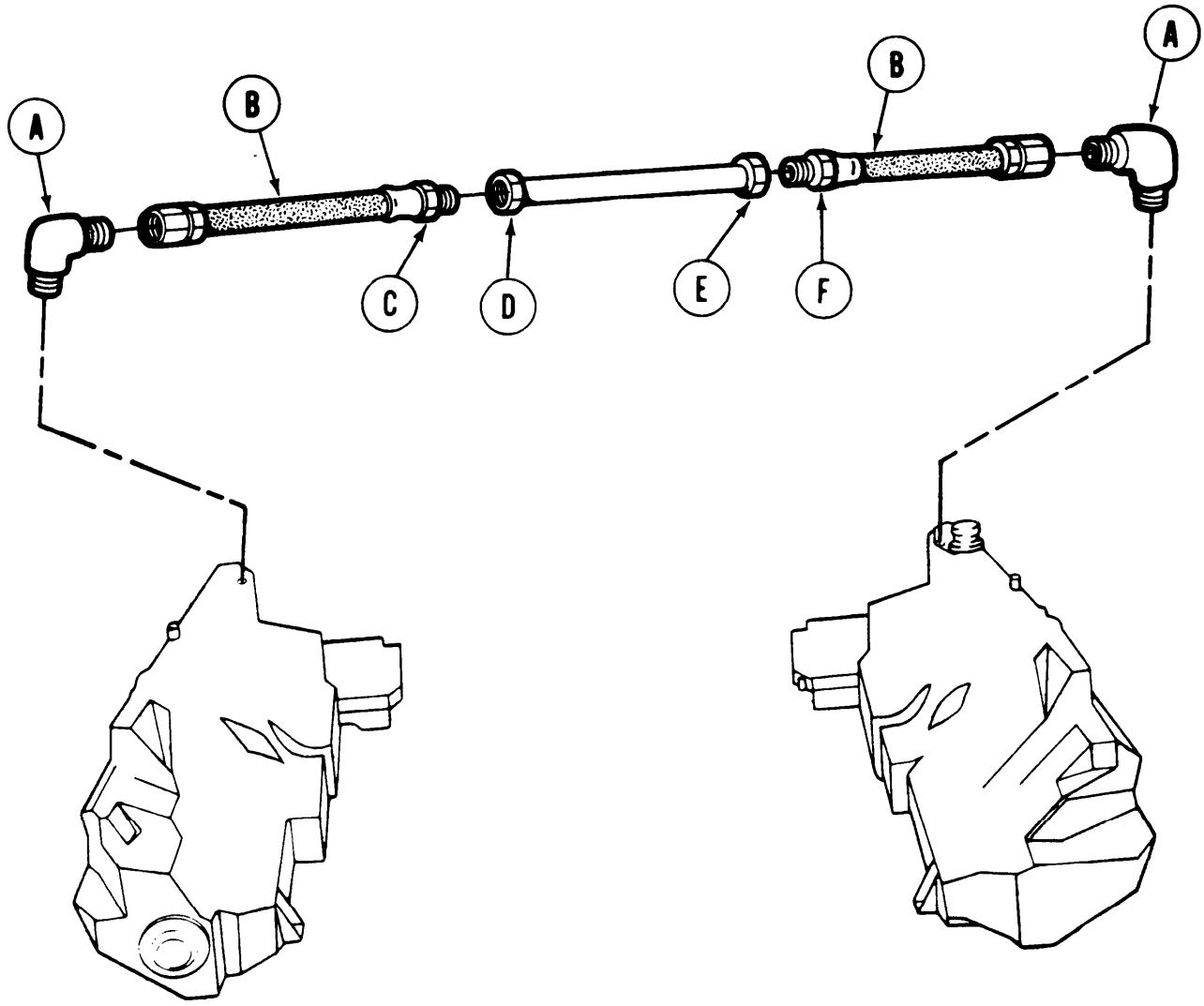

3. Using two 1-1/2 inch open end wrenches, connect hose connector (C) to connector (D) and connector (E) to connector (F).

Go onto Sheet 5

TA248280

BREATHER LINE REPLACEMENT (Sheet 5 of 5)

4. Install two loop clamps (G) on metal breather tube (H) and one loop clamp (G) on hose (B).

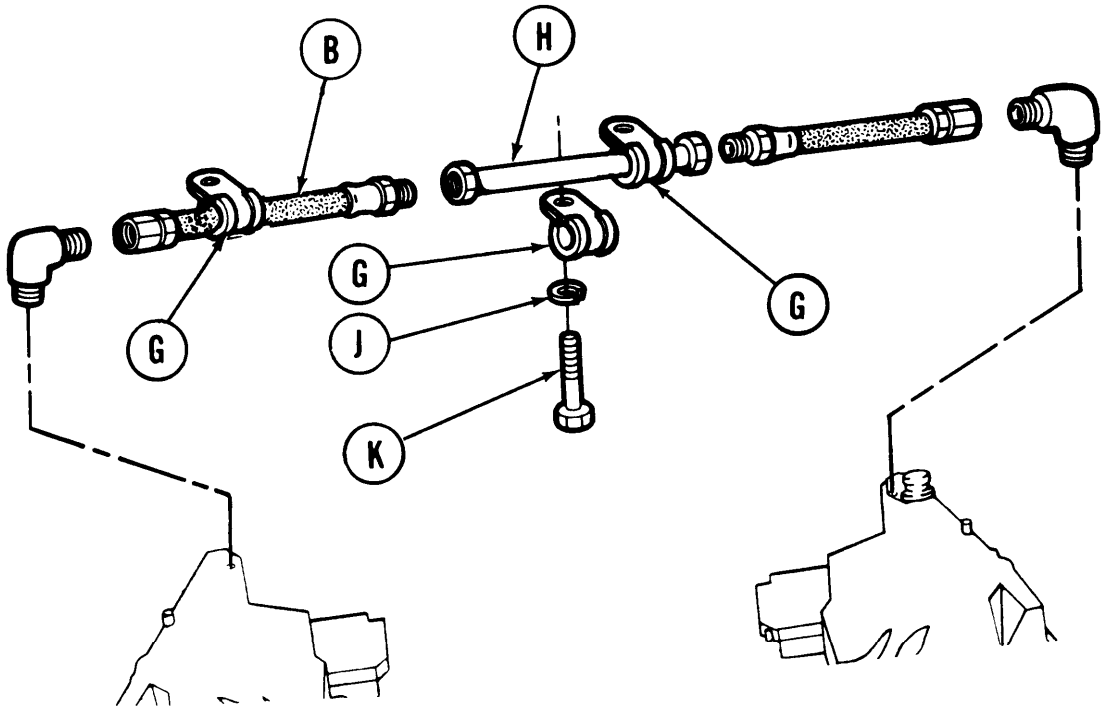

5. Using 7/16 inch socket, install two loop clamps (G), lockwashers (J), and screws (K).

6. Check all hose connections for tightness.

7. Tighten if necessary.

8. Install air cleaner intake hoses (page 7-68).

9. Install powerplant (page 5-14).

End of Task

TA248281

RIGHT FUEL TANK RETURN TUBE ASSEMBLY REPLACEMENT (Sheet 1 of 3)

TOOLS: 7/16 in. socket with 1/2 in. drive
1-3/8 in. open end wrench
1-1/2 in. open end wrench
Ratchet with 1/2 in. drive

SUPPLIES: Rags (Item 65, Appendix D)
Lockwashers

REFERENCE: TM 5-5420-202-10

PRELIMINARY PROCEDURES: Remove powerplant (page 5-2)
Drain fuel tanks (page 7-184)

REMOVAL:

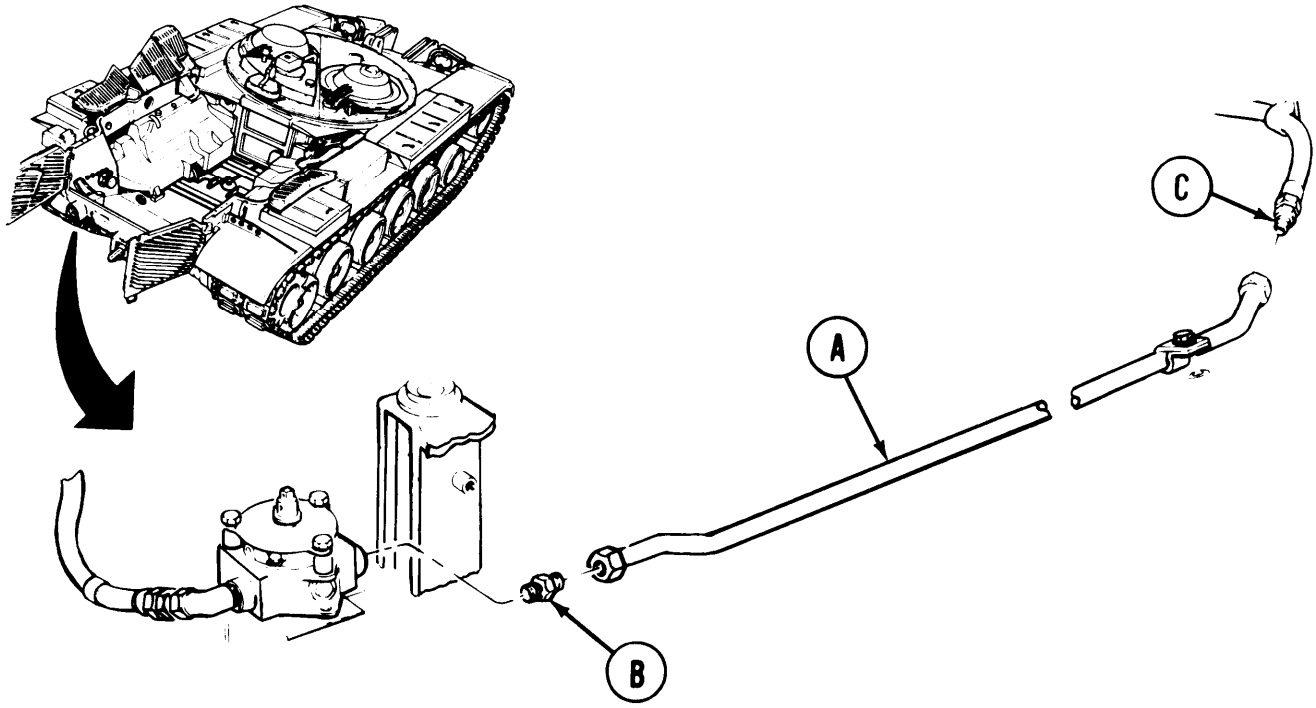

REMOVAL:

1. Using 1-3/8 inch wrench and 1-1/2 inch wrench, disconnect nut of tube (A) from fuel tank selection valve adapter (B).

2. Using 1-1/2 inch. wrench and 1-3/8 inch wrench, disconnect nut of tube (A) from right fuel tank return hose (C).

Go onto Sheet 2

TA248282

RIGHT FUEL TANK RETURN TUBE ASSEMBLY REPLACEMENT (Sheet 2 of 3)

3. Using 7/16 inch socket, remove screw (D) and lockwasher (E) holding tube (A) and clamp (F) to threaded boss.

4. Remove tube (A) and clamp (F).

5. Remove clamp (F) from tube (A).

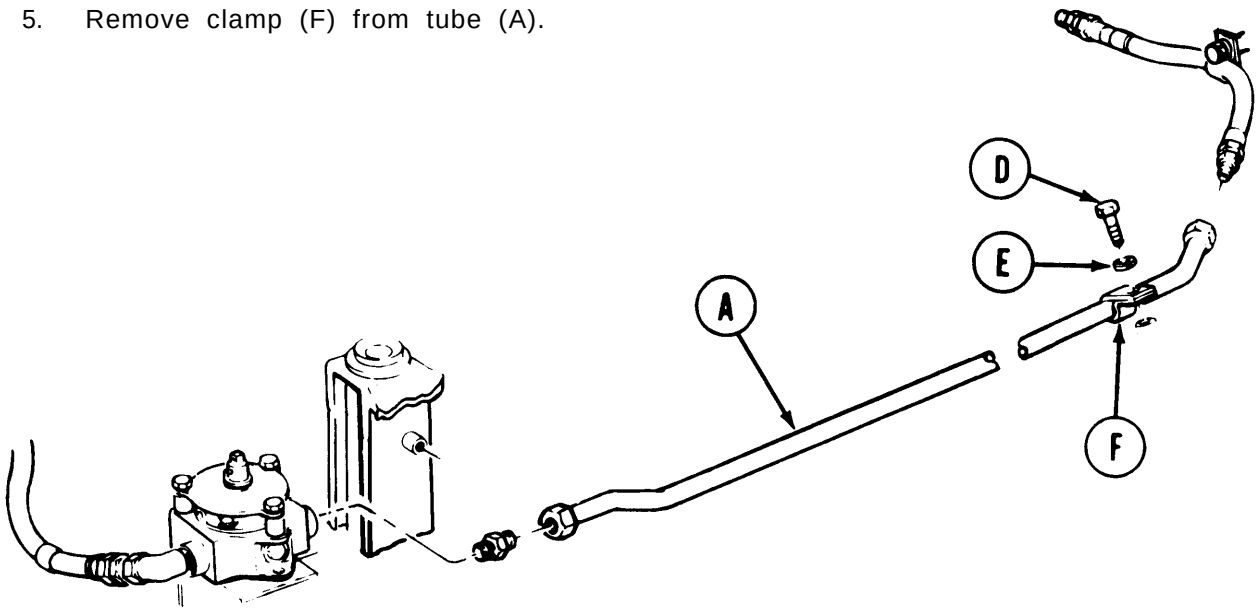

6. Using 1-3/8 inch wrench, remove adapter (B) fuel tank selector cock (G).

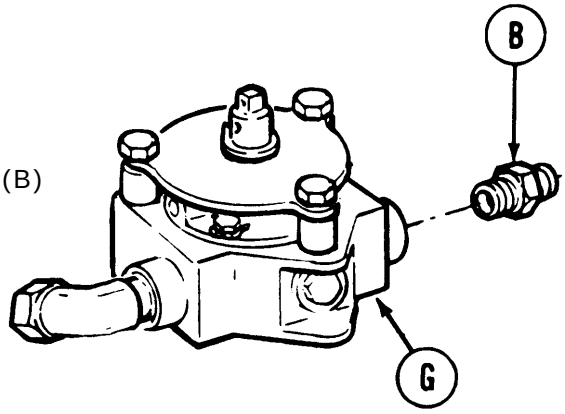

Go on to Sheet 3

TA248283

RIGHT FUEL TANK RETURN TUBE ASSEMBLY REPLACEMENT (Sheet 3 of 3)

INSPECTION:

Inspect threaded components for thread damage. Replace or repair if defective.

INSTALLATION:

1. Using 1-3/8 inch wrench, install adapter (A) to fuel tank selector valve (B).

2. Install clamp (C) to tube (D).

3. Using 1-3/8 inch wrench and 1-1/2 inch wrench, loosely install left nut of tube (D) to fuel tank selector cock adapter (A).

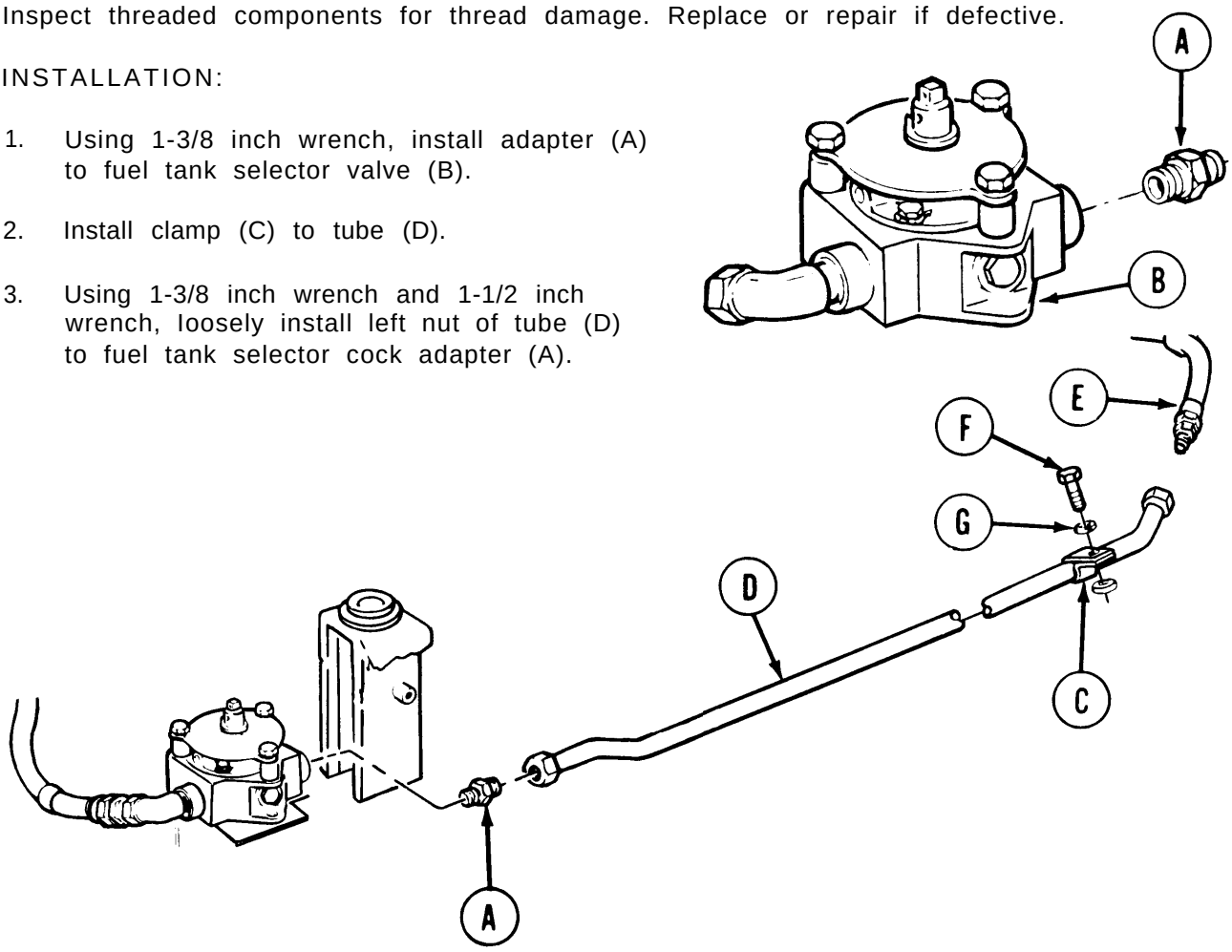

4. Using 1-1/2 inch wrench and 1-3/8 inch wrench, loosely install nut of tube (D) to right fuel tank return hose (E).

5. Using 7/16 inch socket wrench, secure clamp (C) and tube (D) to hull floor with screw (F) and lockwasher (G).

6. Tighten right and left nuts of tube (D).

7. Install powerplant (page 5-14).

8. Service fuel tanks (TM 5-5420-202-10).

End of Task

TA248284

FUEL RETURN HOSE (RIGHT TANK) REPLACEMENT (Sheet 1 of 2)

TOOLS: 1/2 in. socket with 1/2 in. drive
1-1/2 in. open end wrench (2 required)
1-3/8 in. open end wrench
Ratchet with 1/2 in. drive

SPECIAL TOOLS: Ground hop kit (Item 31, Chapter 3, Section I)

SUPPLIES: Sealing compound (Item 24 and Item 20, Appendix D)
Rags (Item 65, Appendix D)

REFERENCE: TM 5-5420-202-10

PRELIMINARY PROCEDURES: Remove powerplant (page 5-2)
Drain fuel tanks (page 7-184)

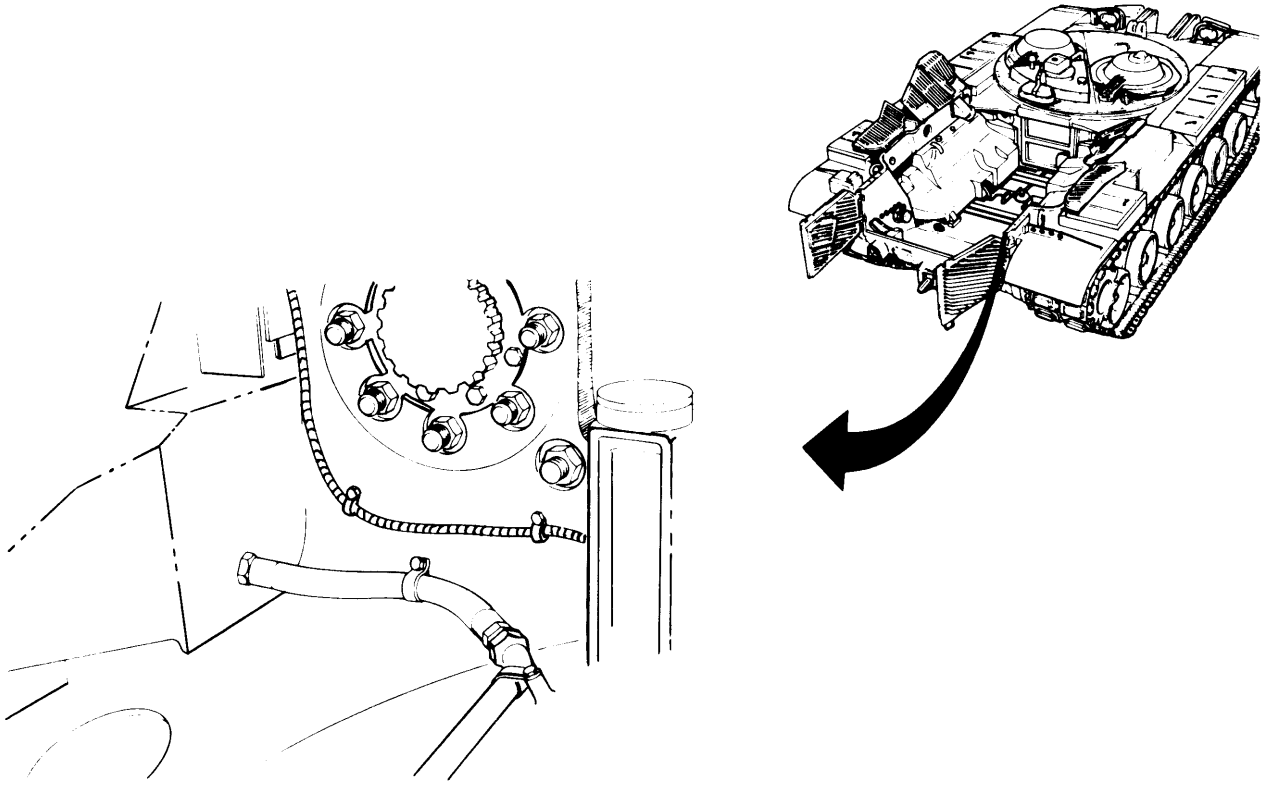

Go on to Sheet 2

TA248285

FUEL RETURN HOSE (RIGHT TANK) REPLACEMENT (Sheet 2 of 2)

NOTE
Put rags under each connection before removing hose end fittings.

REMOVAL:

1. Using 1/2 inch socket, loosen and remove bolt and lockwasher (A) from hose clamp (B).

2. Using 1-1/2 inch open end wrench on hose and fitting (C), and 1-1/2 inch open end wrench on fitting (D), hold hose at point (C) while loosening fitting (D). Slide fitting (D) away from hose and fitting (C).

3. Using 1-3/8 inch open end wrench, loosen fitting (with hose) (E). Remove hose.

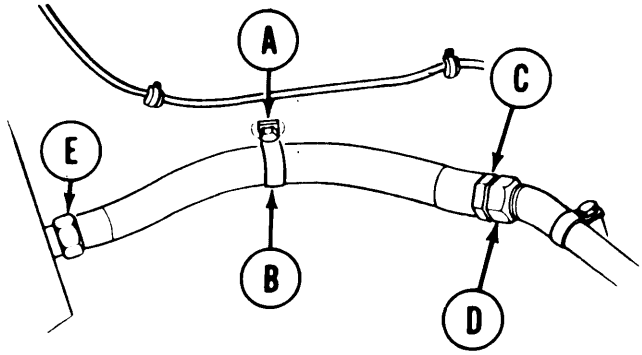

INSTALLATION:

1. Lightly coat threads of both male hose ends with sealing compound.

2. Using 1-3/8 inch open end wrench, secure fitting (with hose) (A).

3. Using 1/2 inch socket, secure clamp (B) with bolt and lockwasher (C).

4. Using 1-1/2 inch open end wrench on hose and fitting (D), and 1-1/2 inch open end wrench on fitting (E), hold hose at point (D) while securing fitting (E).

5. Service fuel tanks (TM 5-5420-202-10).

6. Ground hop engine (page 5-25) and allow it to run for brief time while checking for leaks. If leak is detected, stop engine and tighten fitting. If fittings do not leak, disconnect ground hop (page 5-40).

7. Replace powerplant (page 5-14).

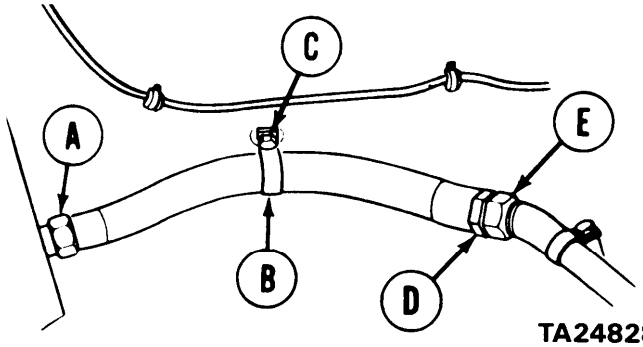

End of Task

TA248286

ENGINE FUEL RETURN SELECTOR COCK REPLACEMENT (Sheet 1 of 4)

PROCEDURE INDEX

PROCEDURE	PAGE
Removal	7-163
Inspection	7-165
Installation	7-165

TOOLS: 7/16 in. socket with 1/2 in. drive
1 in. open end wrench
1-1/2 in. open end wrench (2 required)
1-3/8 in. open end wrench
10 in. adjustable wrench
Vise
Diagonal cutting pliers
Slip joint pliers
Ratchet with 1/2 in. drive

SPECIAL TOOLS: Ground hop kit (Item 31, Chapter 3, Section I)

SUPPLIES: Sealing compound (Item 23 and Item 28, Appendix D)
Rags (Item 65, Appendix D)
Wire (approximately 24 in. long) (Item 61, Appendix D)
Cotter pin

REFERENCE: TM 5-5420-202-10

PRELIMINARY PROCEDURES: Remove powerplant (page 5-2)
Drain fuel tanks (page 7-184)

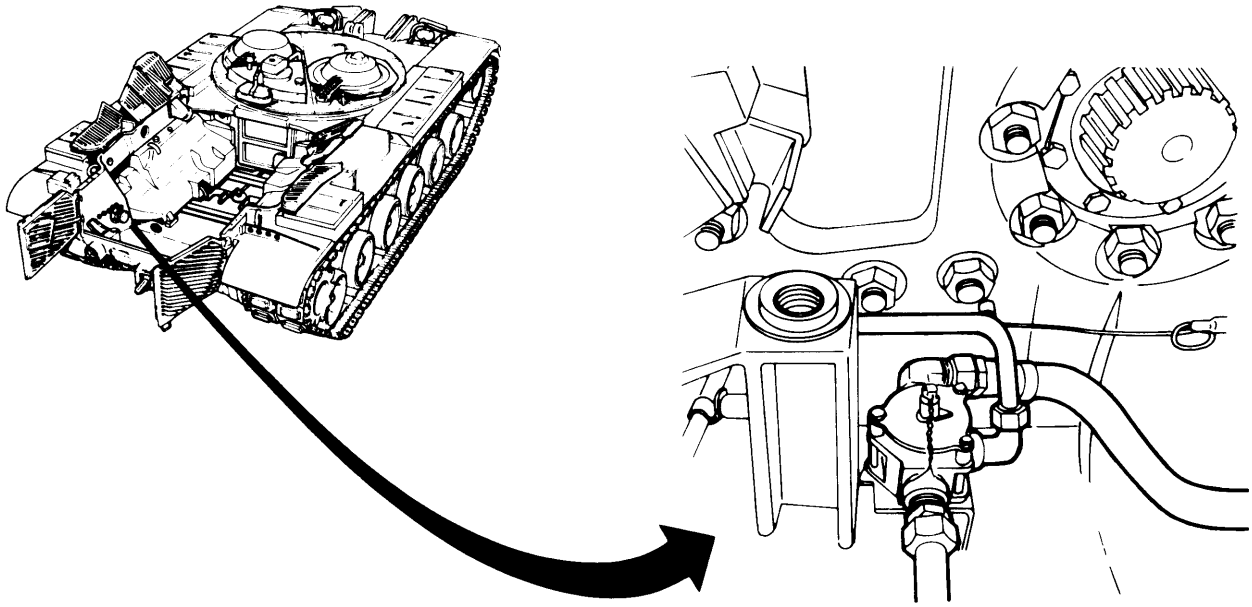

Go onto Sheet 2

TA248287

ENGINE FUEL RETURN SELECTOR COCK REPLACEMENT (Sheet 2 of 4)

REMOVAL:

1. Using 1 inch wrench, disconnect fitting (A).
2. Using one 1-1/2 inch wrench, hold fitting (B) secure and remove fitting (C) with other 1-1/2 inch wrench.
3. Using 1-3/8 inch wrench, hold fitting (D). Remove fitting (E) with 1-1/2 inch wrench.
4. Using cutting pliers, cut lockwire (F) and remove.
5. Using 7/16 inch socket, remove three screws and lockwashers (G) and spacers (H) securing return selector cock (J) to mounting brackets (K). Remove selector cock (J).
6. Place selector cock (J) in vise.
7. Remove cotter pin and headless straight pin (L).
8. Remove pointer assembly (M).
9. Remove instruction plate (N).
10. Using adjustable wrench, remove elbows (P) and (Q).
11. Using 1-3/8 inch wrench, remove fitting (D).
12. Remove selector cock (J) from vise.

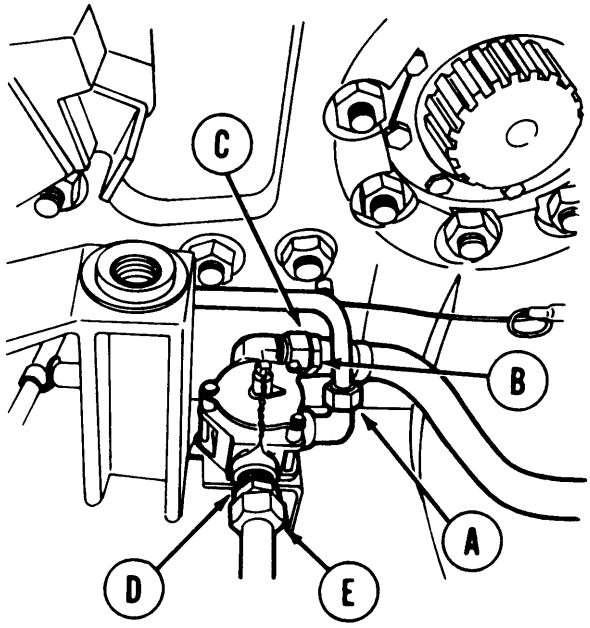

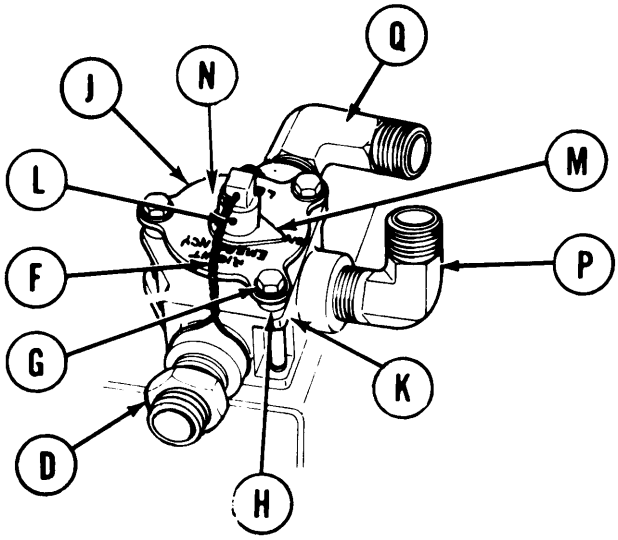

Go on to Sheet 3

TA248288

ENGINE FUEL RETURN SELECTOR COCK REPLACEMENT (Sheet 3 of 4)

INSPECTION:

Inspect headless straight pin (A), pointer assembly (B), instruction plate (C), elbows (D) and (E), and spacer (F) for damage or wear. Replace if necessary.

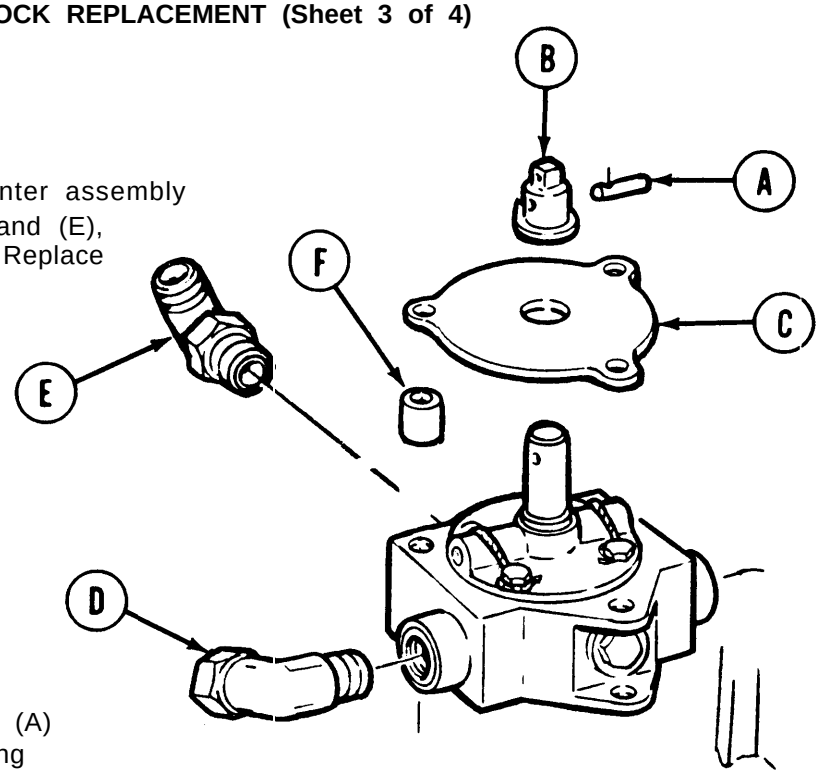

INSTALLATION:

1. Lightly coat male ends of elbows (A) and (B) and fitting (C) with sealing compound.

2. Place selector cock (D) in vise.

3. Using adjustable wrench, install elbows (A) and (B) on return selector cock (D).

4. Using 1-3/8 inch wrench, install fitting (C).

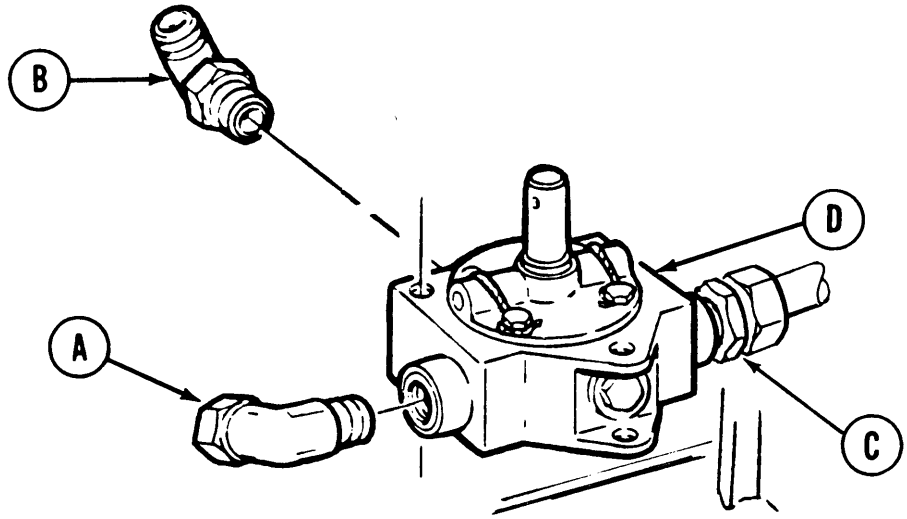

NOTE

Be sure elbows, when tightened, face in direction shown in figure.

Go on to Sheet 4

TA248289

ENGINE FUEL RETURN SELECTOR COCK REPLACEMENT (Sheet 4 of 4)

5. Position instruction plate (E) on selector cock (D) with word BOTH at engine fuel return tube elbow (center outlet).

6. Position pointer assembly (F) at BOTH position.

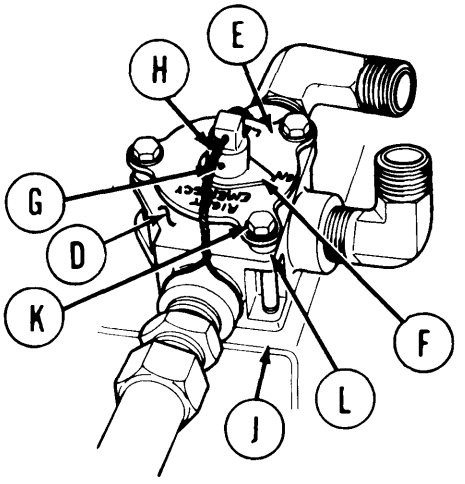

NOTE

Check to be sure all three openings in selector cock are open.

7. Install headless straight pin (G) in pointer assembly (F) and secure with cotter pin.

8. Using slip joint pliers, secure pointer assembly (F) in BOTH position with lockwire (H).

9. Remove selector cock (D) from vise.

10. Using 7/16 inch socket, secure selector cock on mounting bracket (J) with three screws and lockwashers (K) and spacers (L).

11. Using 1-3/8 inch wrench on fitting (M) and 1-1/2 inch wrench on fitting (N), hold fitting (M) in a fixed position while securing fitting (N).

12. Using one 1-1/2 inch wrench on fitting (P) and other 1-1/2 inch wrench on fitting (Q), hold fitting (Q) in a fixed position while securing fitting (P).

13. Using 1 inch wrench, secure tube fitting (R).

14. Service fuel tanks (TM 5-5420-202-10).

15. Attach ground hop kit (page 5-27).

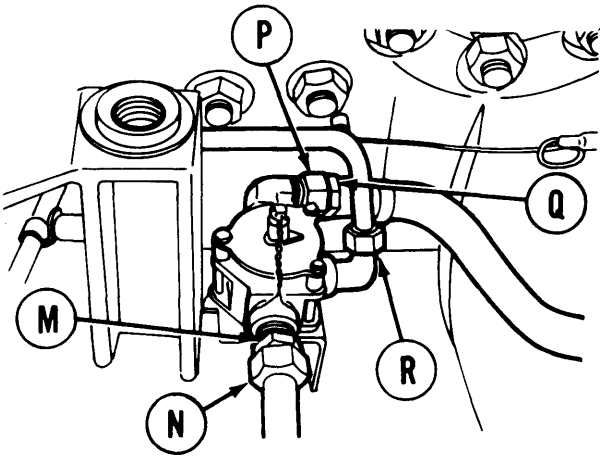

16. Start engine and allow it to run for a brief time while checking for leaks.

17. Disconnect ground hop kit (page 5-40).

18. Replace powerplant (page 5-14).

End of Task

TA248290

ENGINE FUEL RETURN HOSE ASSEMBLY (LEFT SIDE) REPLACEMENT (Sheet 1 of 2)

TOOLS: 1-1/2 in. open end wrench (2 required)
1-3/8 in. open end wrench

SPECIAL TOOLS: Ground hop kit (Item 31, Chapter 3, Section I)

REFERENCE: TM 5-5420-202-10

SUPPLIES: Sealing compound (Item 24, Appendix D)
Rags (Item 65, Appendix D)

PRELIMINARY PROCEDURES: Remove powerplant (page 5-2)
Drain fuel tanks (page 7-184)
Remove engine fuel return hose assembly (page 7-169)

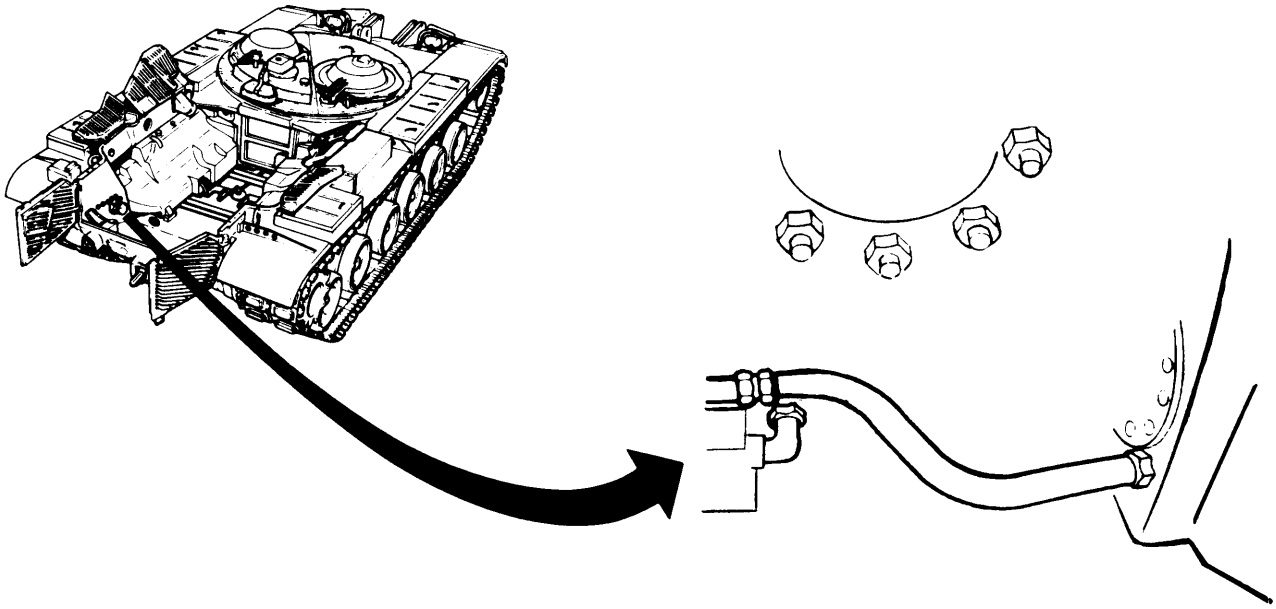

Go on to Sheet 2

TA248291

ENGINE FUEL RETURN HOSE ASSEMBLY (LEFT SIDE) REPLACEMENT (Sheet 2 of 2)

REMOVAL:

1. Using one 1-1/2 inch wrench to hold fitting (A), use other 1-1/2 inch wrench and loosen fitting (B) from elbow (C).

2. Using 1-3/8 inch wrench, loosen fitting (D) from fuel tank (E).

3. Carefully remove hose (F) from elbow (C) and fuel tank (E).

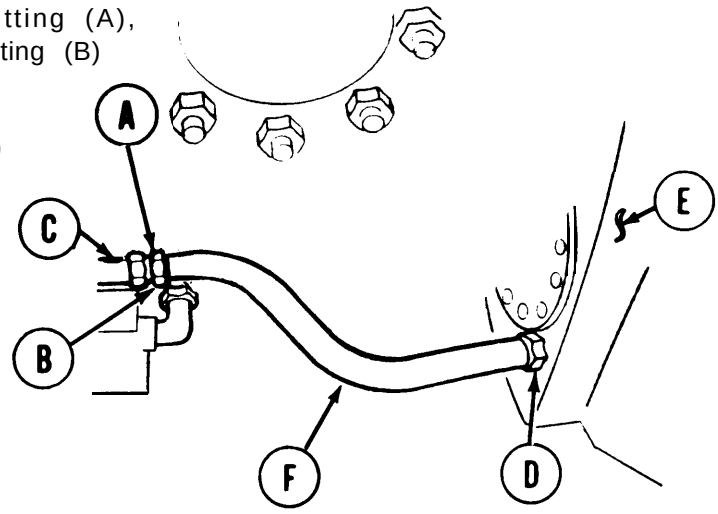

INSTALLATION:

CAUTION

Make sure that drain plugs of both fuel tanks are correctly sealed.

1. Lightly coat threads of each hose end fitting with sealing compound.

2. Position hose (A) onto elbow (B) and fuel tank mount (C).

3. Using 1-3/8 inch wrench, tighten fitting (D) to fuel tank mount (C).

4. Using one 1-1/2 inch wrench to hold fitting (E), use other 1-1/2 inch wrench and tighten fitting (F) to elbow (B).

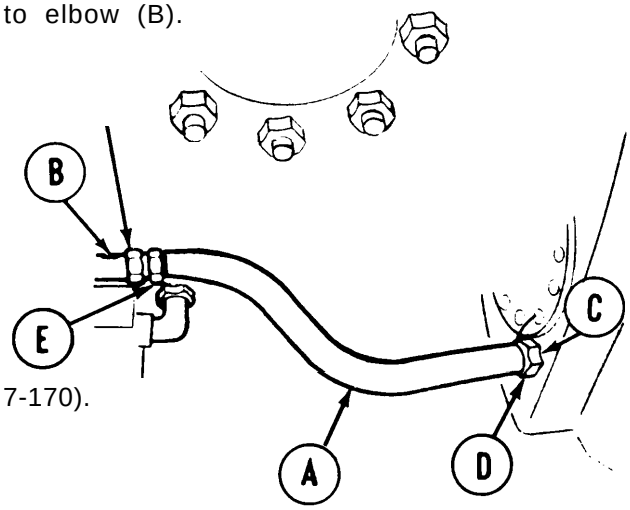

5. Install engine fuel return hose assembly (page 7-170).

6. Service fuel tanks (TM 5-5420-202-10).

7. Attach ground hop kit (page 5-25).

8. Allow engine to run for a brief time while checking for leaks. If a leak is detected, stop engine and tighten fittings.

9. Disconnect ground hop (page 5-40).

10. Install powerplant (page 5-14).

End of Task

TA248292

ENGINE FUEL RETURN HOSE REPLACEMENT (Sheet 1 of 2)

TOOLS: 7/16 in. socket with 1/2 in. sq. drive
1 in. open end wrench
1-1/8 in. open end wrench
1-3/ 16 in. open end wrench
10 in. adjustable wrench
Ratchet with 1/2 in. sq. drive

SUPPLIES: Lockwashers

PRELIMINARY PROCEDURE: Remove transmission shroud (page 9-2)

NOTE

Use suitable container to catch fuel whenever any fuel line or connection is loosened or disconnected. Use cloth to wipe any spillage. Discard cloth and drained fuel in accordance with local procedures.

REMOVAL:

1. Using adjustable wrench to hold elbow (A), use 1 inch wrench to disconnect nut (B).
2. Using 1 inch wrench to hold fitting (C), use 1-1/8 inch wrench to disconnect nut (D).
3. Using 7/16 inch socket, remove screw (E), lockwasher (F), and clamp (G).
4. Remove tube assembly (H).
5. Using 1-1/8 inch wrench on nut (J) and 1 inch wrench on fitting (K), disconnect hose assembly (L) from tube assembly (M).
6. Remove coupled hose assemblies (L) and (N) from vehicle.
7. Using 1 inch wrench on hose assemblies (L) and (N) and 1-3/16 inch wrench on coupling (P), remove coupling (P).

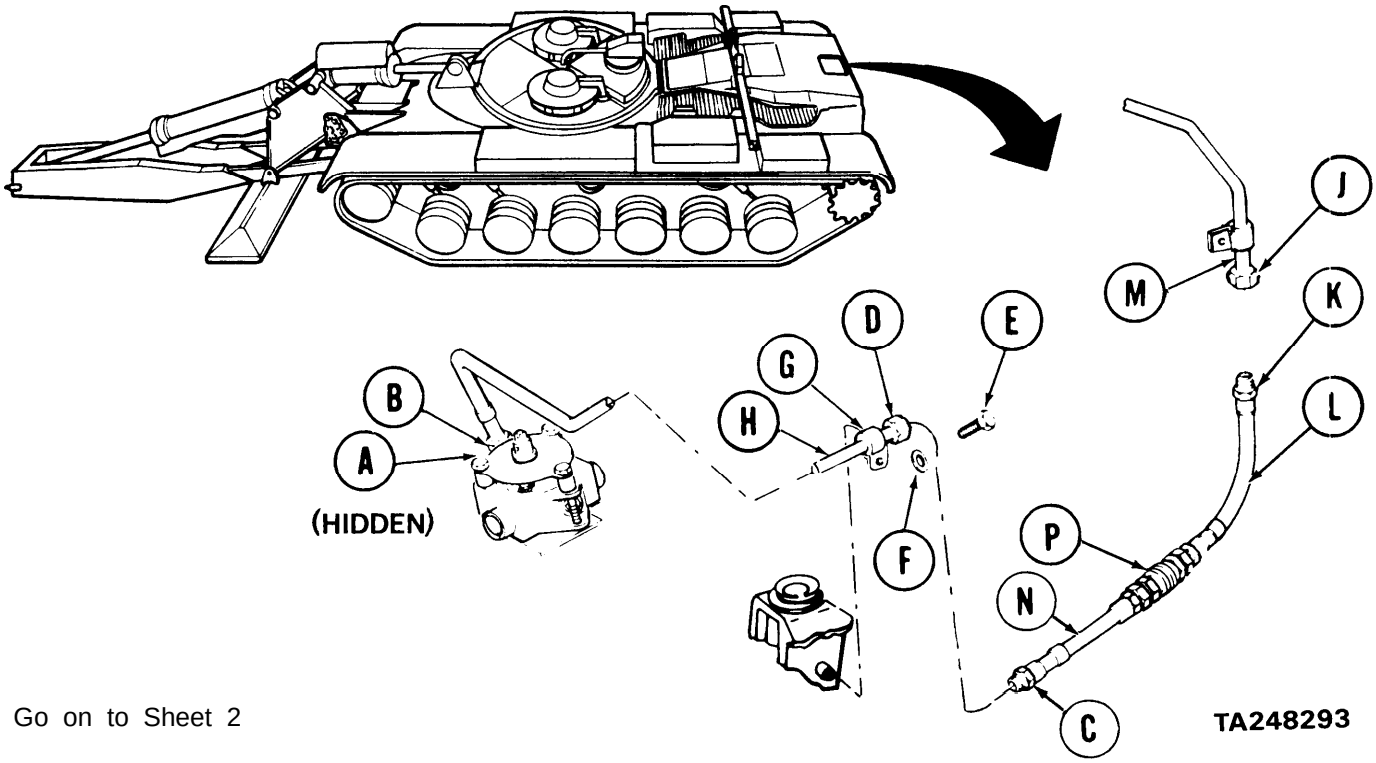

Go on to Sheet 2

ENGINE FUEL RETURN HOSE REPLACEMENT (Sheet 2 of 2)

INSTALLATION:

1. Using 1 inch wrench on hose assemblies (A) and (B), and 1-3/8 inch wrench on coupling (C), connect coupling (C) and hose assemblies (A) and (B) together.
2. Position assembled hose assemblies (A) and (B) with coupler (C) into vehicle and connect fitting (D) to nut (E) finger tight.
3. Position tube assembly (F) into vehicle and install nut (G) to elbow (H) finger tight.
4. Using 7/16 inch socket, install clamp (J), lockwasher (K), and screw (L) to tube assembly (F).
5. Using 1 inch wrench on fitting (M) and 1-1/8 inch wrench on nut (N) connect hose assembly (A) to tube assembly (F).
6. Using 1 inch wrench on fitting (D) and 1-1/8 inch wrench on nut (E) tighten nut (E).
7. Using adjustable wrench to hold elbow (H), use 1 inch wrench to tighten nut (G).
8. Install transmission shroud (page 9-6).

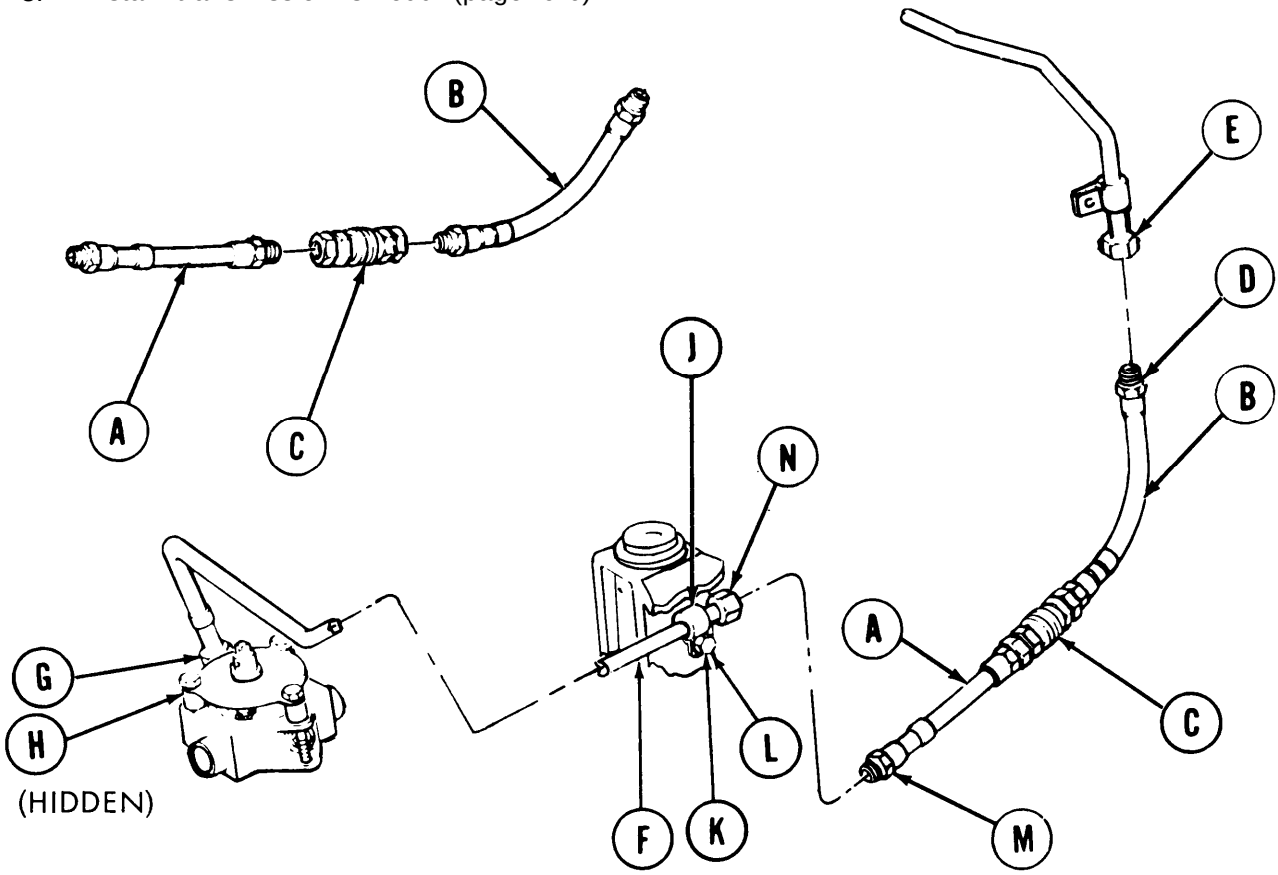

End of Task

TA248294

FUEL SHUTOFF HANDLE REPLACEMENT (Sheet 1 of 2)

TOOLS: 1/2 in. combination box and open end wrench
9/16 in. combination box and open end wrench
Pin punch 1/8 inch
Ball peen hammer
Slip joint pliers
Vise

REFERENCE: TM 5-5420-202-10

REMOVAL:

1. Release spring (A) securing handle (B).

2. Hold extension (C) with 1/2 inch wrench while loosening jamnut (D) with 9/16 inch wrench,

NOTE

If necessary, grip cable (E) with pliers to remove handle (B) and extension (C).

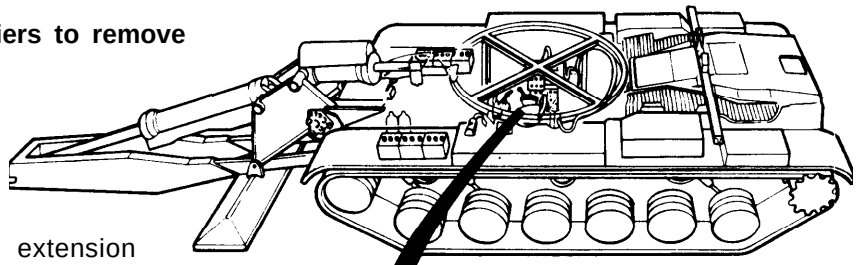

QUADRANTS REMOVED FOR CLARITY

3. Remove handle (B) and handle extension (C) as assembly from cable (E).

4. Remove jamnut (D).

DISASSEMBLY:

1. Using vise to hold handle (B) drive two pins (F) out of handle (B) with hammer and pin punch.

2. Separate handle (B) from extension (C).

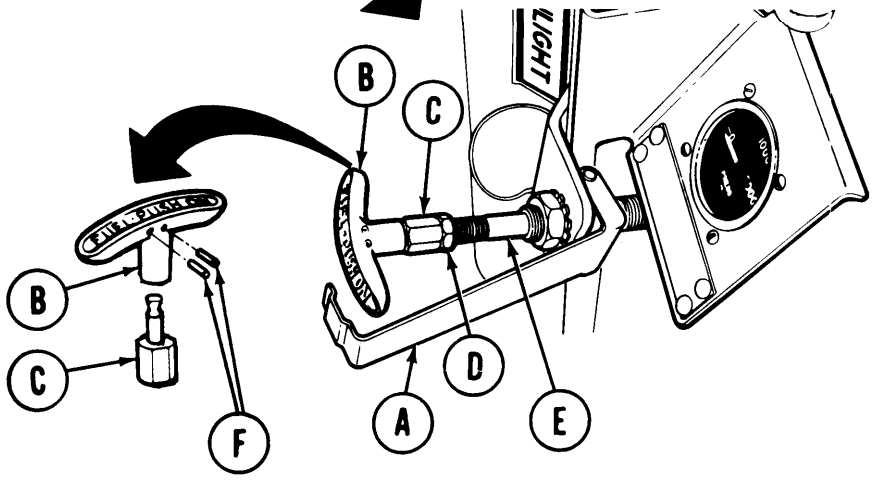

Go on to Sheet 2

TA248295

FUEL SHUTOFF HANDLE REPLACEMENT (Sheet 2 of 2)

ASSEMBLY:

1. Position handle extension (A) in handle (B) and support in a vise.

2. Using hammer, tap two pins (C) into holes in handle (B) to secure extension (A). Remove assembly from vise.

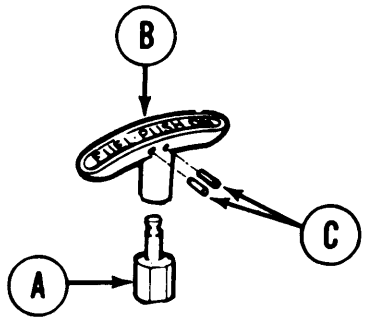

INSTALLATION:

1. Thread jamnut (A) onto cable (B).

2. Thread handle (C) and extension (D) as an assembly all the way onto cable (B).

3. Using 1/2 inch wrench to hold extension (D) and 9/16 inch wrench on jamnut (A), tighten jamnut against handle assembly (C) and (D).

4. Close spring (E) to secure handle (C) in place.

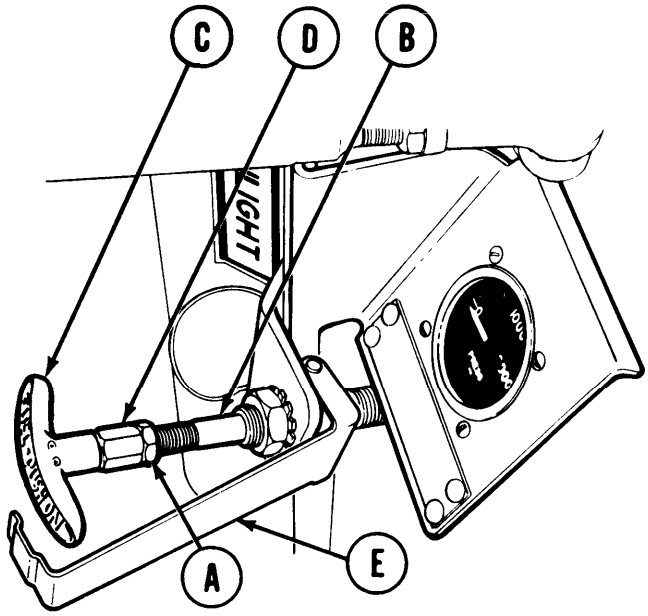

End of Task

TA248296

HOSE ASSEMBLY (TO PRIMARY FUEL FILTER) REPLACEMENT (Sheet 1 of 2)

TOOLS: 7/8 in. open end wrench
1-1/8 in. open end wrench
1-3/16 in. open end wrench

SUPPLIES: Lint-free cloth (Item 12, Appendix D)
Container

PRELIMINARY PROCEDURE: Remove powerplant (page 5-2)

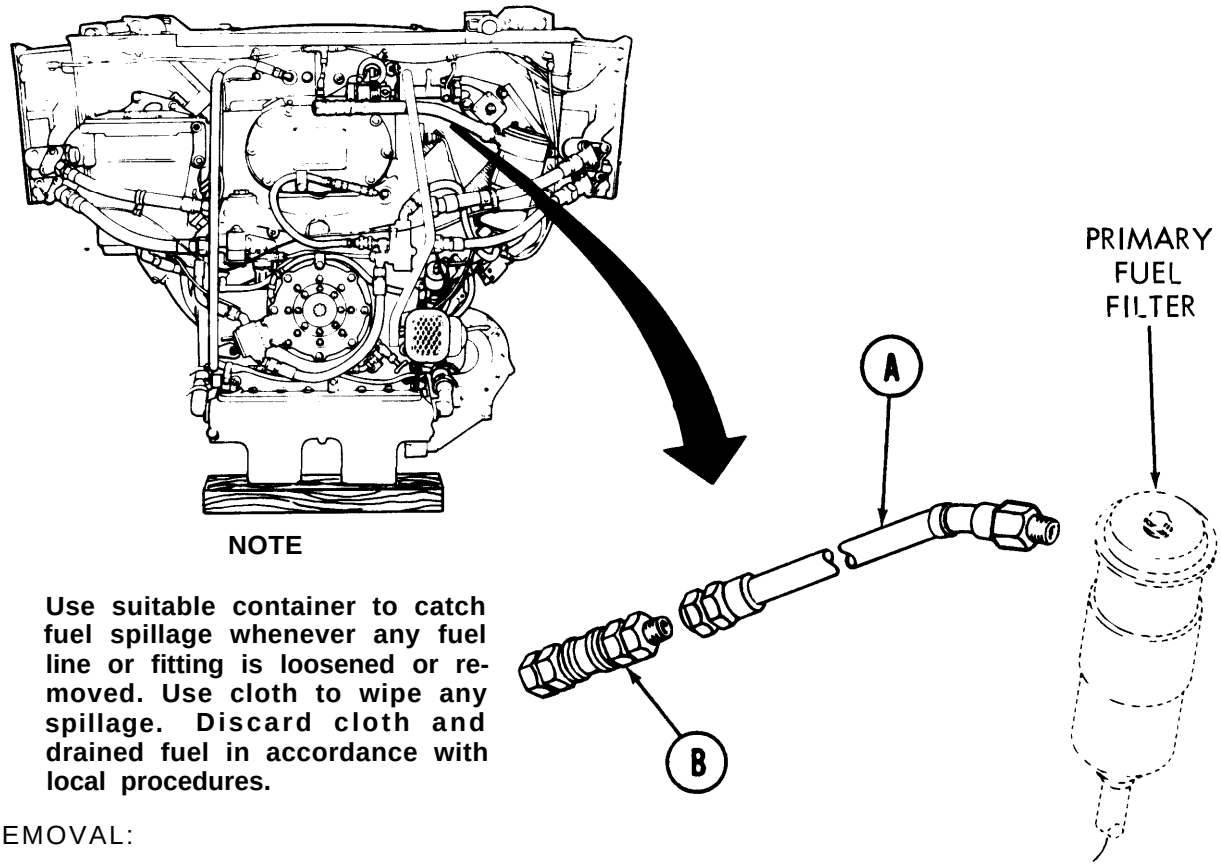

NOTE

Use suitable container to catch fuel spillage whenever any fuel line or fitting is loosened or removed. Use cloth to wipe any spillage. Discard cloth and drained fuel in accordance with local procedures.

REMOVAL:

1. Using 7/8 inch wrench, remove hose assembly (A) from primary fuel filter.

2. Using 1-1/8 inch wrench and 1-3/16 inch wrench, disconnect coupler assembly (B) from hose assembly (A).

CLEANING AND INSPECTION:

1. Using clean cloth, clean hose assembly (A).

2. Inspect hose assembly (A) for cracks and breaks. If damaged, replace hose assembly (A).

Go on to Sheet 2

TA248297

HOSE ASSEMBLY (TO PRIMARY FUEL FILTER) REPLACEMENT (Sheet 2 of 2)

INSTALLATION:

1. Using 1-1/8 inch wrench and 1-3/16 inch wrench, install coupler assembly (A) to hose assembly (B).

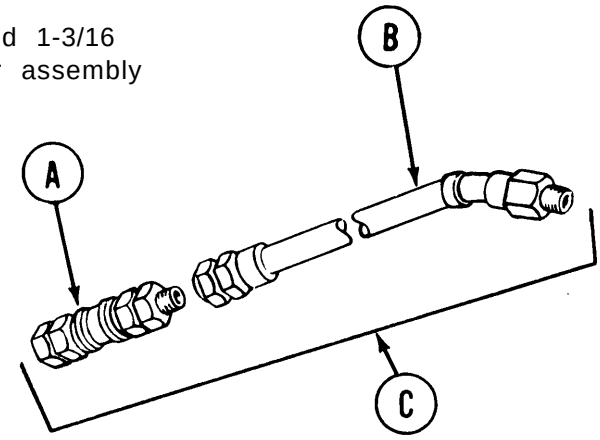

2. Using 7/8 inch wrench, install assembled hose assembly (C) to primary fuel filter.

3. Install powerplant to vehicle (page 5-14).

End of Task

TA248298

HOSE ASSEMBLY (TO PURGE LINE) REPLACEMENT (Sheet 1 of 3)

TOOLS: 9/16 in. combination box and open end wrench
5/8 in. open end wrench (2 required)
1 in. open end wrench

SUPPLIES: Rags (Item 12, Appendix D)

PRELIMINARY PROCEDURE: Remove powerplant from vehicle (page 5-2)

REMOVAL:

1. Using 9/16 inch wrench, remove nut (A) from clamp (B).

2. Remove clamp (B).

3. Using 5/8 inch wrench, loosen bushing (C).

4. Unscrew hose assembly (D) from engine.

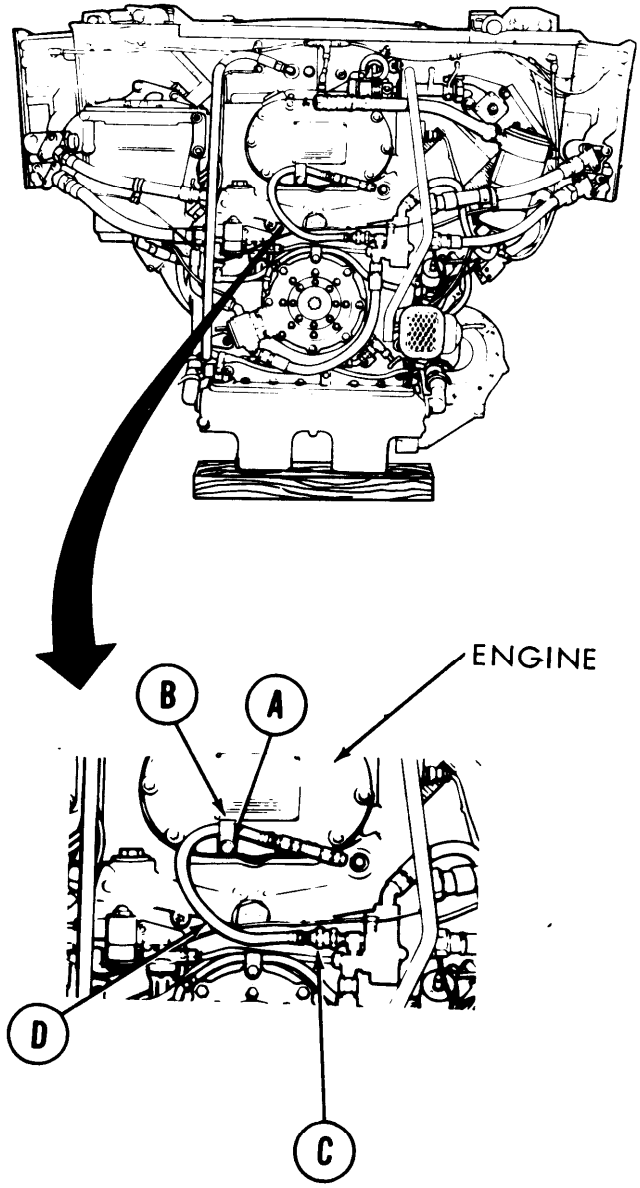

Go on to Sheet 2

TA248299

HOSE ASSEMBLY (TO PURGE LINE) REPLACEMENT (Sheet 2 of 3)

5. Using 5/8 inch wrench on bushing (C) and 1 inch wrench on coupler assembly (E), remove bushing (C).

6. Using 1 inch wrench on coupler assembly (E) and 5/8 inch wrench on bushing (D), remove coupler (E).

7. Using two 5/8 inch wrenches, remove bushing (D) from hose assembly (F).

8. Using two 5/8 inch wrenches, remove quick-disconnect (G) from bushing (H).

9. Using two 5/8 inch wrenches, remove bushing (H) from hose assembly (F).

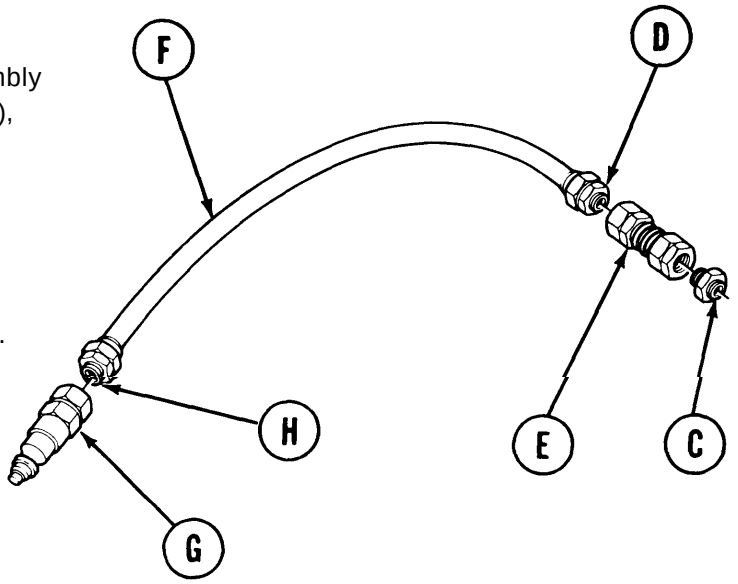

CLEANING AND INSPECTION:

1. Using rags, clean hose assembly (F), coupler assembly (E), and quick disconnect (G).

2. Inspect hose assembly (F) and coupler assembly (E) for cracks and breaks. If damaged, replace hose assembly (F) and coupler assembly (E).

Go on to Sheet 3

TA248300

HOSE ASSEMBLY (TO PURGE LINE) REPLACEMENT (Sheet 3 of 3)

INSTALLATION:

1. Using two 5/8 inch wrenches, install bushings (A) and (B) in hose assembly (C).

2. Using two 5/8 inch wrenches, install quick-disconnect (D) onto bushing (A).

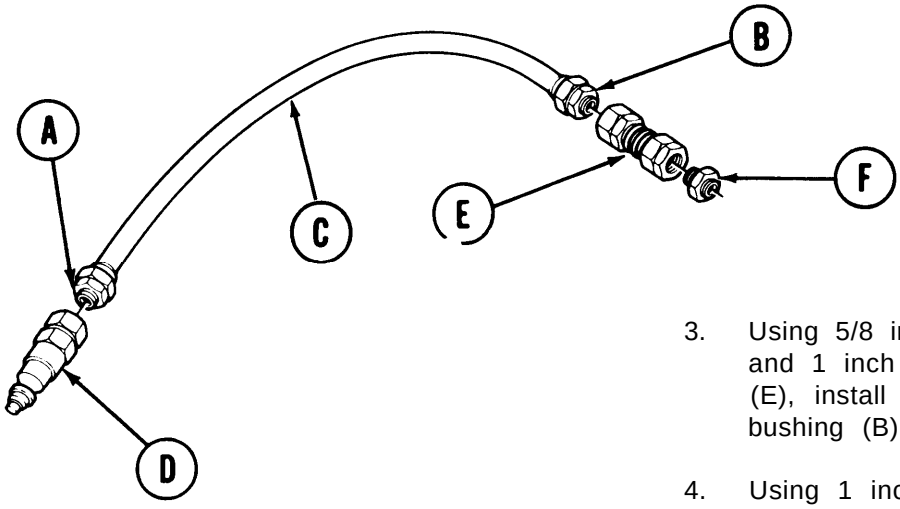

3. Using 5/8 inch wrench on bushing (B) and 1 inch wrench on coupler assembly (E), install coupler assembly (E) onto bushing (B).

4. Using 1 inch wrench on coupler assembly (E) and 5/8 inch wrench on bushing (F), install bushing (F) into coupler assembly (E).

5. Position assembled hose assembly (G) to engine.

6. Install clamp (H) and nut (J) to engine.

7. Using 5/8 inch wrench, install bushing (F) to engine.

8. Using 9/16 inch wrench, tighten nut (J).

9. Install engine upper access cover (page 17-12).

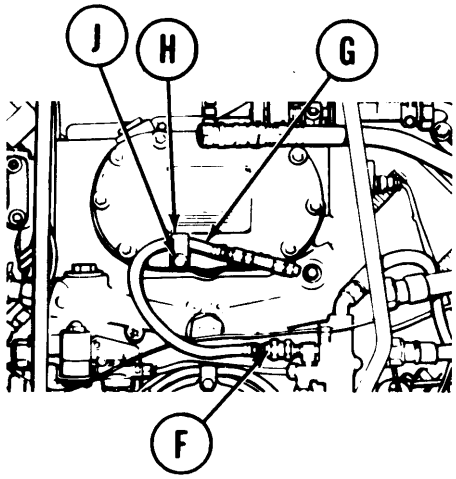

End of Task

TA248301

FUEL TANK CONDENSATE REMOVAL (Sheet 1 of 6)

PROCEDURE INDEX

PROCEDURE	PAGE
Installing Hand Pump	7-178
Removing Condensate	7-181
Removal of Hand Pump	7-181

TOOLS: Hand fuel pump
Hoses (2)
Adapter

SUPPLIES: 55 gallon drum
Lint-free cloth (Item 12, Appendix D)

REFERENCE: TM 5-5420-202-10

PRELIMINARY PROCEDURE: Open top deck grille doors (TM 5-5420-202-10)

INSTALLING HAND PUMP:

WARNING

Do not smoke or allow flames or sparks within area while handling fuel. Have a manned fire extinguisher present.

NOTE

The procedures for condensate removal from left and right fuel tanks are identical. Left fuel tank condensate removal is covered in this task.

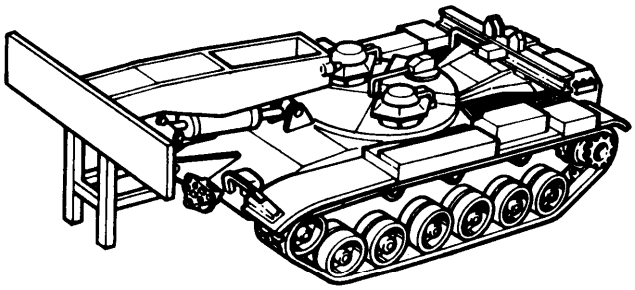

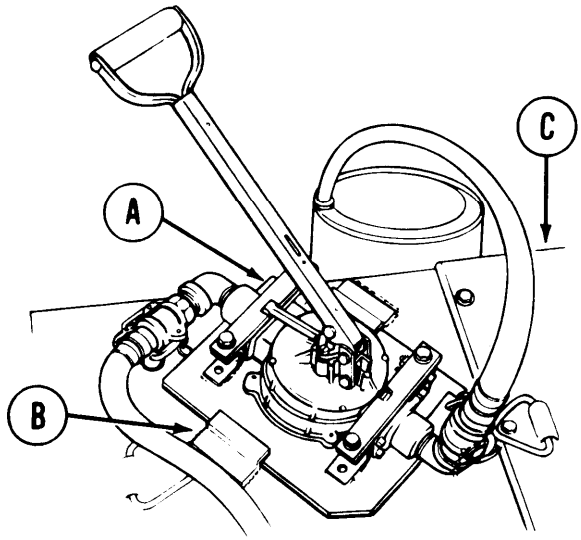

1. Install hand fuel pump (A) inside of lips of welded brackets (B) on air cleaner (c).

Go on to Sheet 2

TA248302

FUEL TANK CONDENSATE REMOVAL (Sheet 2 of 6)

NOTE

Steps 2 and 3 apply to removal of dust covers from hand fuel pump and hoses.

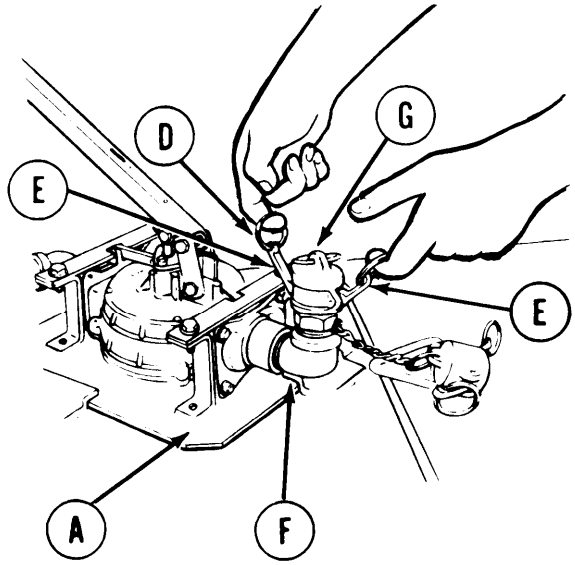

2. Using fingers in clamp rings (D), pull two clamps (E) out and down against body of connector (F) to loosen dust cover (G).

3. Remove dust cover (G) from connector (F).

4. Install hose (H) on connector (F) on discharge side of hand fuel pump (A).

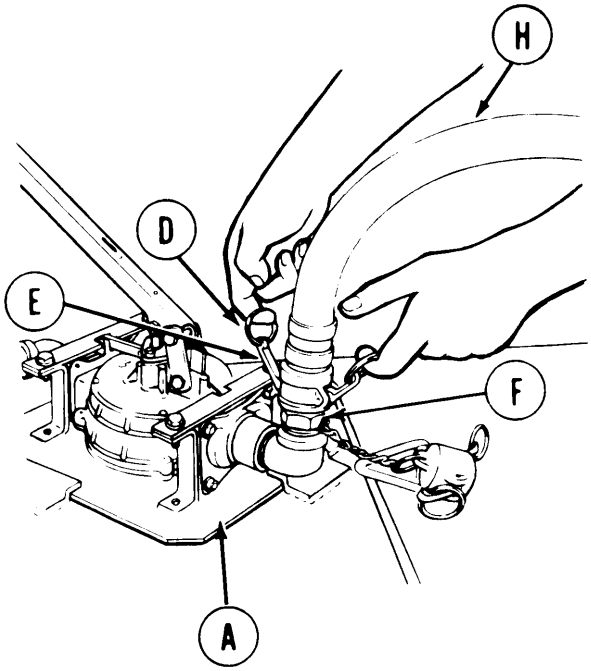

5. Using fingers in clamp rings (D), pull clamps (E) out and up against hose (H) to clamp hose (H) in place.

6. Repeat steps 4 and 5 for installing hose on connector on suction side of hand fuel pump (A).

Go on to Sheet 3

TA248303

FUEL TANK CONDENSATE REMOVAL (Sheet 3 of 6)

7. Install loose end of discharge hose (H) in 55 gallon drum (J).

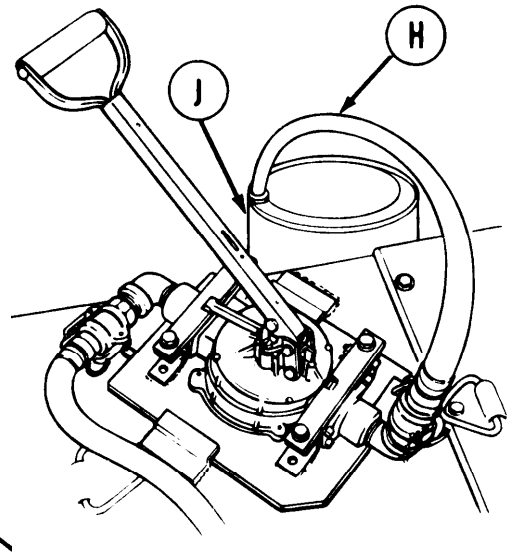

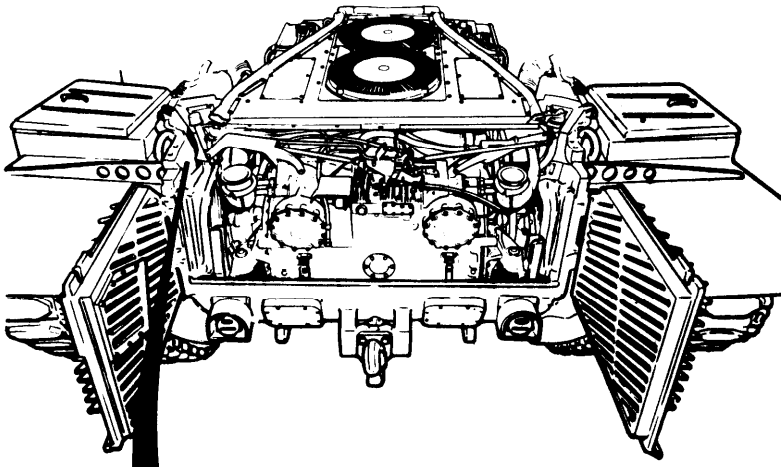

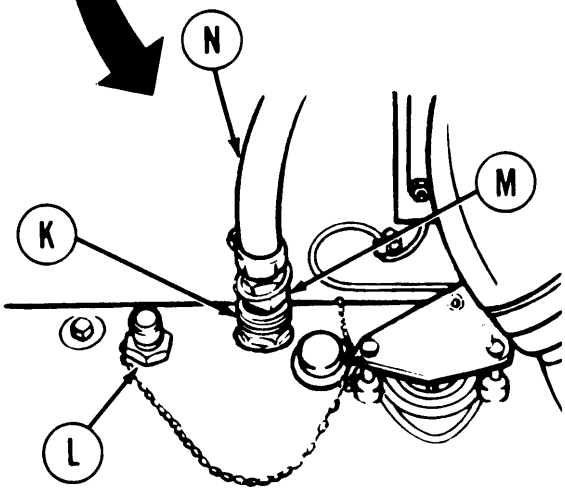

8. Using one hand to push quick-disconnect (K) down, remove dust cover (L).

9. Install adapter (M) on suction hose (N).

10. Install adapter (M) on quick-disconnect (K) by pushing adapter down until it snaps into place.

Go on to Sheet 4

TA248304

FUEL TANK CONDENSATE REMOVAL (Sheet 4 of 6)

REMOVING CONDENSATE:

CAUTION

Use care not to spill fuel over tank. Wipe away any spilled fuel immediately with rags cloth.

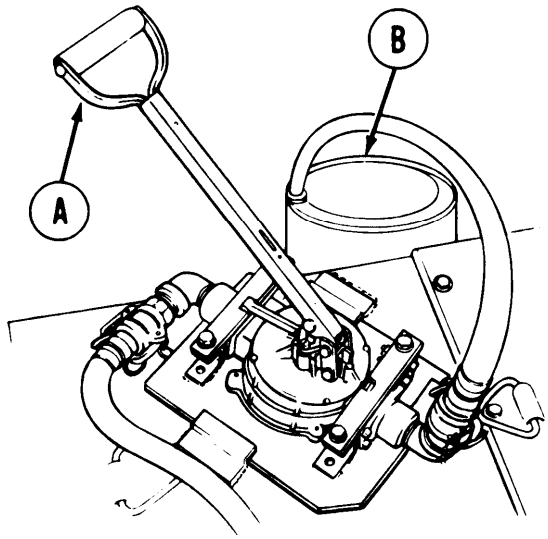

1. Operate pump handle (A) to transfer fuel from fuel tank to 55 gallon drum (B).

2. Continue operating pump handle (A) until all fuel has been removed from fuel tank.

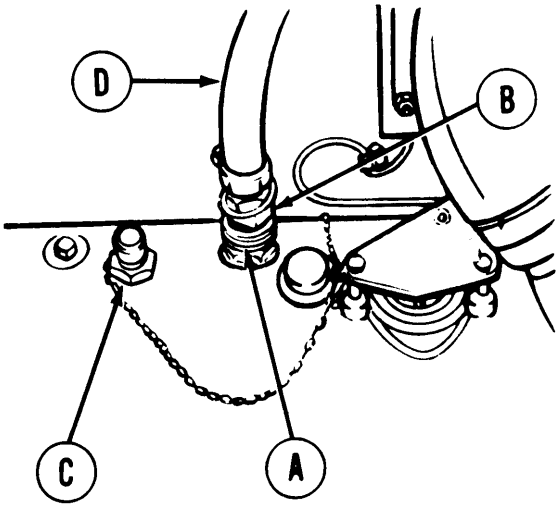

REMOVAL OF HAND PUMP:

1. Using one hand to push quick-disconnect (A) down, remove adapter (B) from quick-disconnect (A).

2. Install dust cover (C) on quick-disconnect (A) by pushing dust cover (C) down until it snaps into place.

3. Remove adapter (B) from suction hose (D).

TA248305

Go on to Sheet 5

FUEL TANK CONDENSATE REMOVAL (Sheet 5 of 6)

4. Operate pump handle (E) several times to drain any fuel left in hoses (D) and (F) and hand fuel pump (G).

5. Remove discharge hose (F) from 55 gallon drum (H), and let hose hang over side of tank.

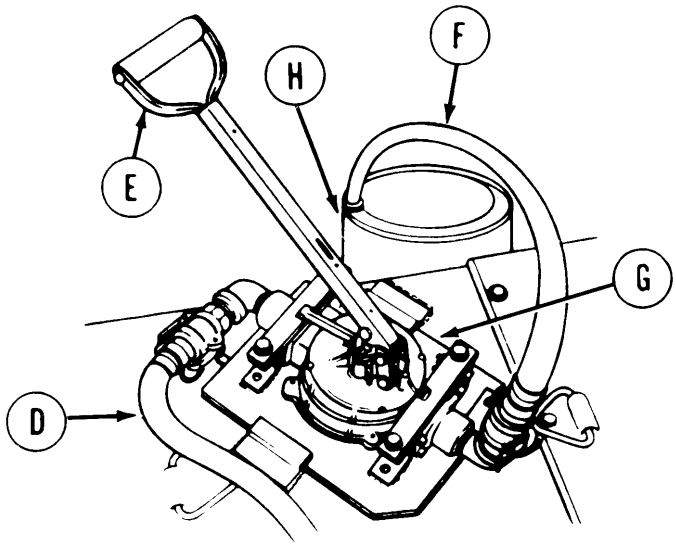

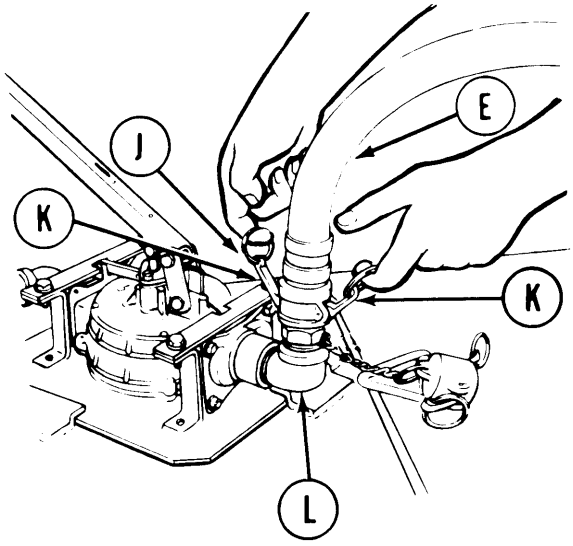

6. Using fingers in clamp rings (J), pull clamps (K) out and down to loosen discharge connector (L).

7. Remove discharge hose (E) from pump discharge connector (L).

8. Repeat steps 6 and 7 for removal of suction hose.

9. Install dust cover (M) on discharge connector (L).

10. Using fingers in clamp rings (J), pull clamps (K) out and up against dust cover (M) to clamp dust cover in place.

11. Repeat steps 9 and 10 for installing dust cover on hand fuel pump suction connector and hoses.

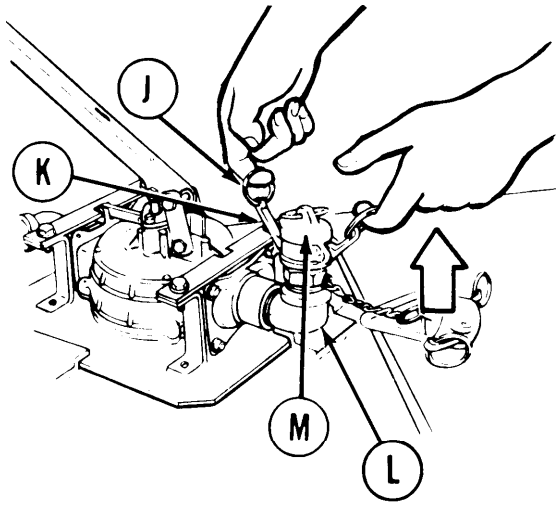

Go on to Sheet 6

TA248306

FUEL TANK CONDENSATE REMOVAL (Sheet 6 of 6)

12. Using both hands, slide hand fuel pump (H) out of lips of welded brackets (N).

13. Remove hand fuel pump (H) from tank air cleaner (P).

14. Close top deck grille doors (TM 5-5420-202-10).

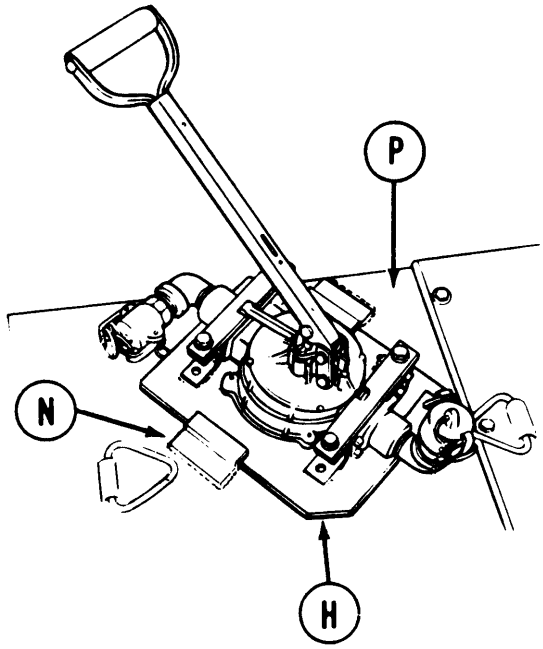

End of Task

TA248307

DRAINING FUEL TANKS (Sheet 1 of 2)

TOOLS: 3/4 in. socket with 1/2 in. drive
10 in. extension with 1/2 in. drive
Ratchet with 1/2 in. drive
Pump, dispensing, hand

SUPPLIES: Grease (Item 37, Appendix D)
Rags (Item 12, Appendix D)
Gasket
Drain pan

REMOVAL:

WARNING

Do not smoke or allow flames or sparks within area while draining fuel tanks. Have a manned fire extinguisher present.

NOTE

Whenever possible, start draining procedure when minimum amount of fuel is indicated on fuel level indicator. Fuel may be transferred to another tanker into 55 gallon drums through the use of the pump.

NOTE

Fuel may be drained onto the ground only under emergency conditions

1. Using socket, remove four screws and lock-washers (A) securing access cover (B) and gasket (C) to underside of hull (forward of engine compartment drain valve). Throw gasket away.
2. Place drain pan under access opening to catch draining fuel.
3. Using extension and ratchet, remove drain plug (D) and allow fuel to drain. About 8 gallons will remain in fuel tanks.
4. Discard drained fuel.

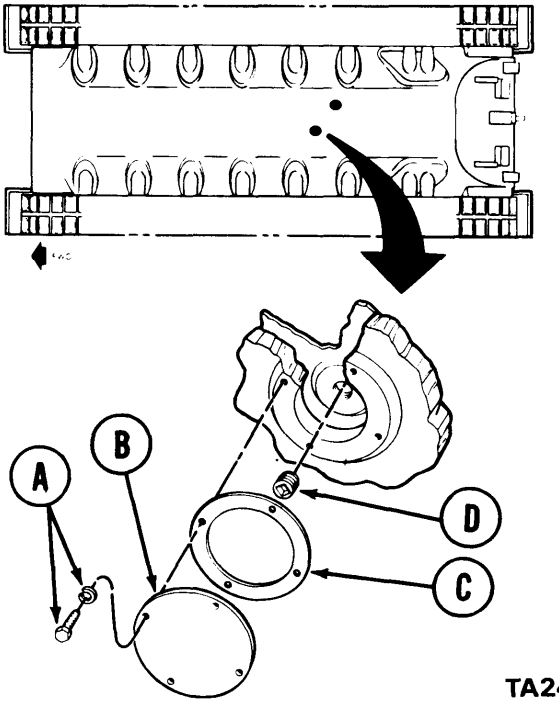

Go on to Sheet 2

TA248308

DRAINING FUEL TANKS (Sheet 2 of 2)

INSTALLATION:

1. Clean plug (A) with rags and coat threads with grease.

2. Using extension and ratchet, install drain plug (A) l

3. Place new gasket (B) and access cover (C) in position on underside of hull.

4. Install four lockwashers and screws (D) securing access cover to hull.

5. Using socket, tighten four screws (D).

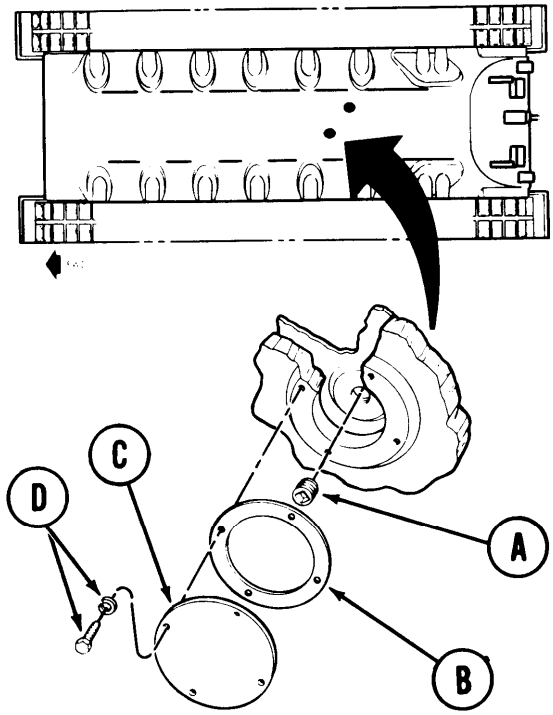

End of Task

TA248309

FUEL TANKS (LEFT AND RIGHT) DRAIN PLUG REPLACEMENT (Sheet 1 of 1)

TOOLS: 12 in. extension with 1/2 in. drive
Ratchet with 1/2 in. drive

SUPPLIES: Grease (Item 37, Appendix D)

REFERENCE: TM 5-5420-202-10

PRELIMINARY PROCEDURE: Drain fuel tanks (page 7-184)

REMOVAL:

NOTE
Fuel drain plug is removed to drain fuel tanks (preliminary procedures).

INSPECTION:

Inspect fuel drain plug for stripped threads or damaged flats. Replace unserviceable plug.

INSTALLATION:

1. Coat fuel drain plug threads with grease .
2. Using extension and ratchet, install fuel drain plug (A).
3. Install fuel drain access covers (page 7-185).
4. Fill fuel tanks (TM 5-5420-202-1 O).

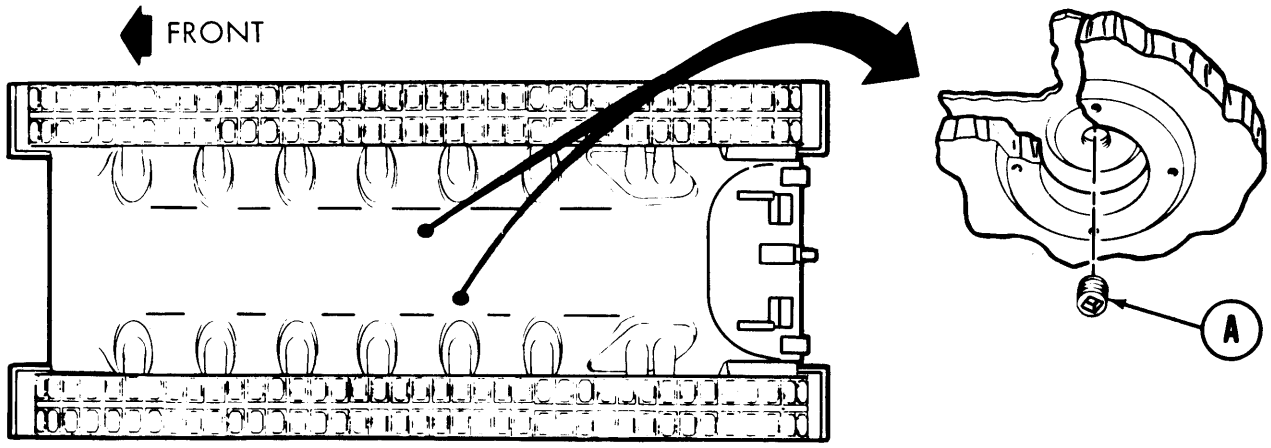

End of Task

TA248310

PRIMARY FUEL FILTER ELEMENT REPLACEMENT (Sheet 1 of 5)

PROCEDURE INDEX

PROCEDURE	PAGE
Removal	7-187
Cleaning and Inspection	7-189
Installation	7-189

TOOLS: 9/16 in. combination box and open end wrench
8 in. adjustable wrench

SUPPLIES: Fuel filter element kit
Rags (Item 12, Appendix D)
Gasket

REFERENCE: TM 5-5420-202-10

PERSONNEL: Two

PRELIMINARY PROCEDURE: Open front left intake grille door (TM 5-5420-202-10)

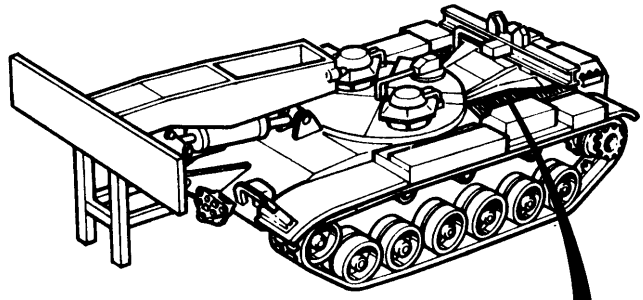

REMOVAL:

1. Position container to catch fuel and, using 9/16 inch wrench, loosen capscrew (A) until capscrew turns free.

2. Lift cover (B) and gasket (C) off filter body (D). Throw gasket away.

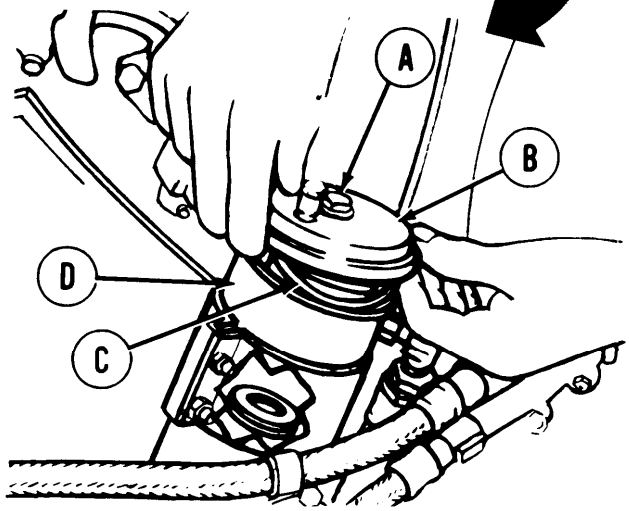

Go on to Sheet 2

TA248311

PRIMARY FUEL FILTER ELEMENT REPLACEMENT (Sheet 2 of 5)

3. Remove filter element (E) from filter body (D). Throw element away.

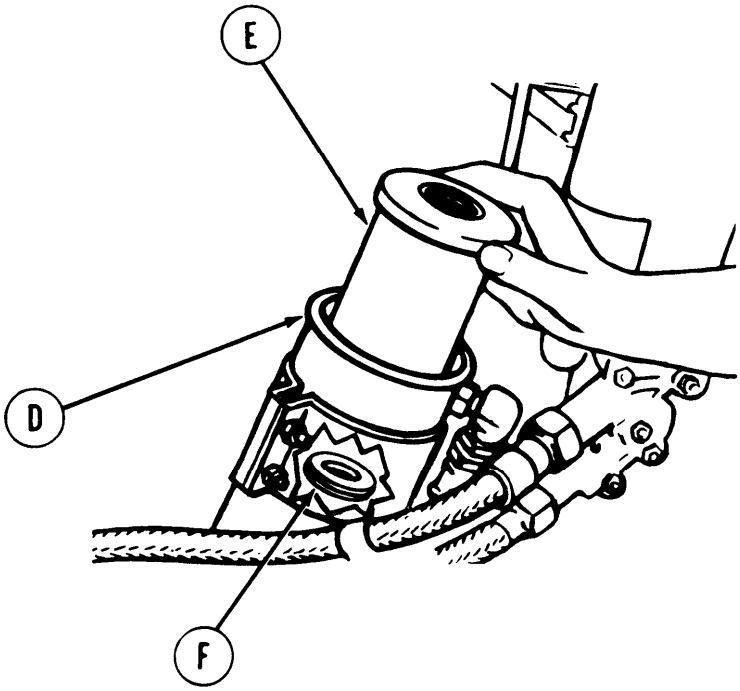

4. Remove preformed packing (F) from element seat inside filter body. Throw preformed packing away.

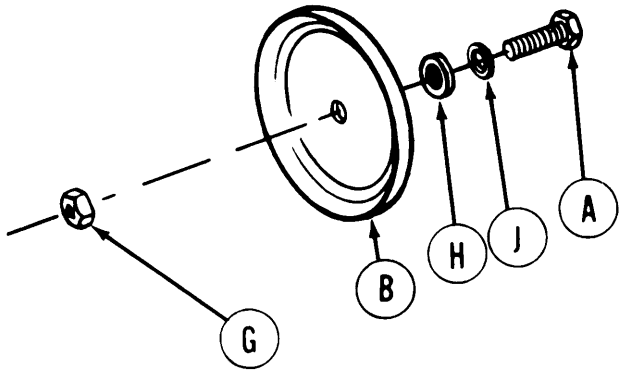

5. Using 9/16 inch wrench and adjustable wrench, remove nut (G), cover (B), gasket (H), and washer (J) from screw (A). Throw gasket (H) away.

Go on to Sheet 3

TA248312

PRIMARY FUEL FILTER ELEMENT REPLACEMENT (Sheet 3 of 5)

CLEANING AND INSPECTION:

1. Using clean cloth, clean inside of filter body and around the filter body rim.
2. Inspect filter body and cover for cracks, holes, or dents on sealing edges.
3. Replace any damaged parts.

INSTALLATION:

1. Install washer (A) and new gasket (B) from element kit and cover (C) on screw (D).

NOTE

Do not tighten nut (E) down completely. Leave enough nut showing to allow removal.

2. Using 9/16 inch wrench and adjustable wrench, install nut (E) on screw (D) and tighten nut (E).
3. Install new gasket (F), from kit, into seat on the inside of cap (C).

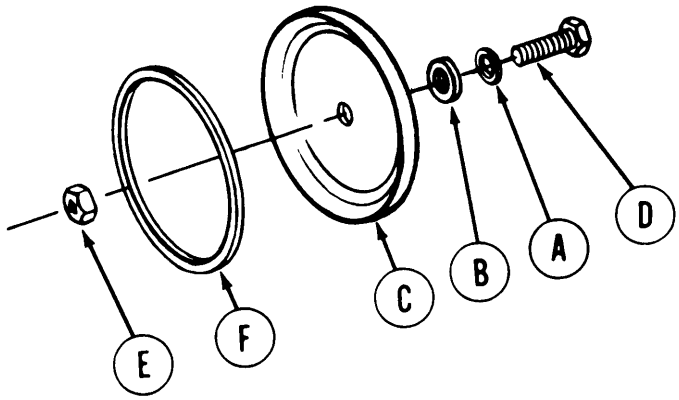

Go on to Sheet 4

TA248313

PRIMARY FUEL FILTER ELEMENT REPLACEMENT (Sheet 4 of 5)

4. Install new preformed packing (G) from kit onto seat inside filter body (H).

5. Install new filter element (J) inside filter body (H).

6. Install cap (C) with gasket (F) on rim of filter body (H) and tighten screw (D) enough to get good seal between cap (C) and filter body (H).

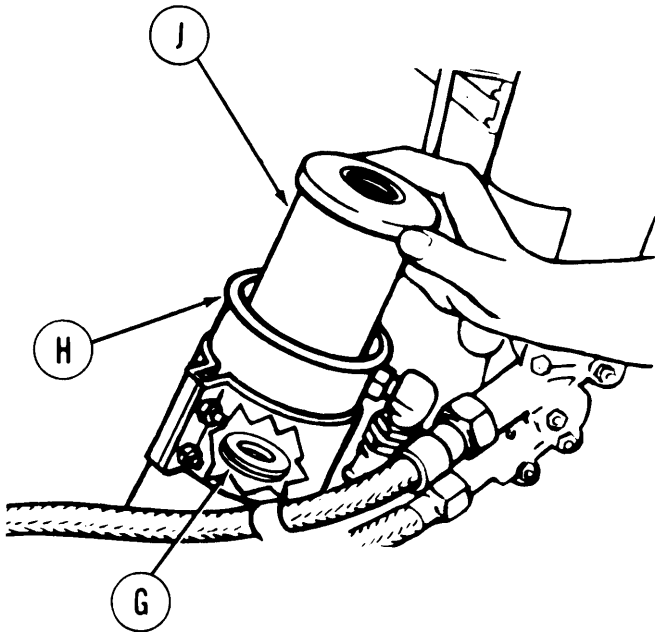

7. Unscrew bleed cap (K) until it can be opened or closed using fingers. Leave valve open.

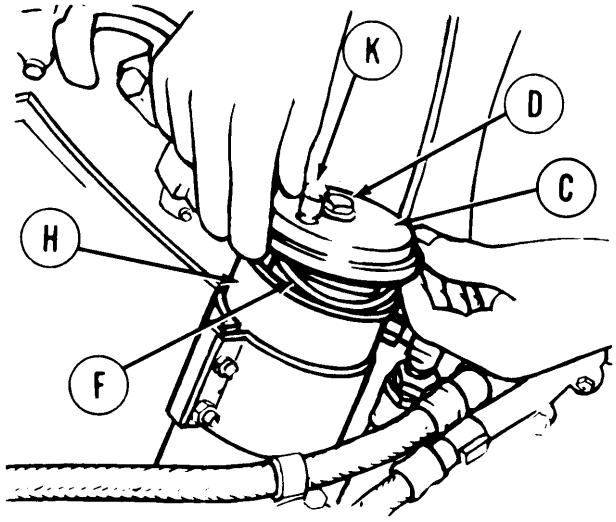

Go on to Sheet 5

TA248314

PRIMARY FUEL FILTER ELEMENT REPLACEMENT (Sheet 5 of 5)

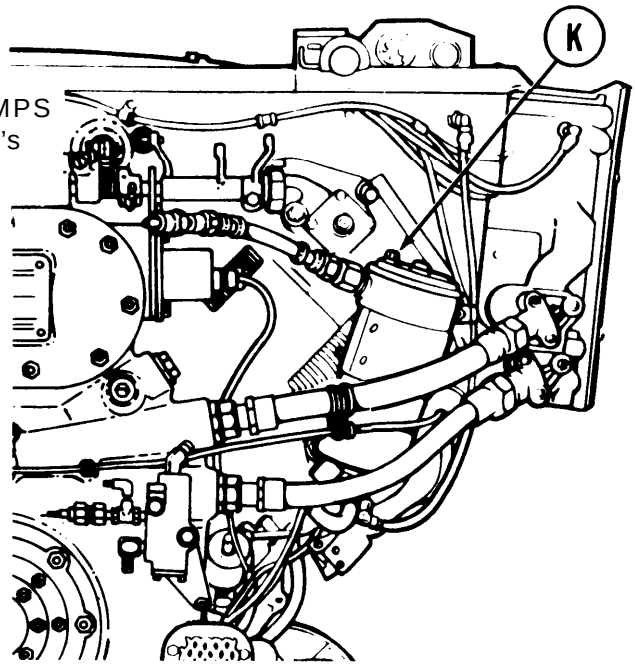

8. Using another technician, set FUEL PUMPS switch (L) on master control panel in driver's compartment to ON.

9. Set MASTER BATTERY switch (M) to ON and observe air release (bubbles) from bleed cap (K).

10. Set MASTER BATTERY switch (M) to OFF and, after about 1 minute, repeat step 9.

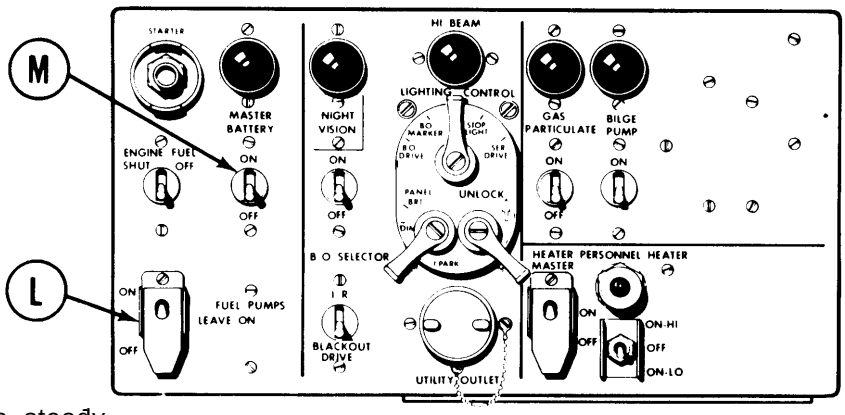

11. Repeat steps 9 and 10 until a steady flow of fuel comes out of bleed cap (K), then close bleed cap (K) and set MASTER BATTERY switch to OFF.

12. Using adjustable wrench, tighten bleed cap (K) enough so it cannot be opened with the fingers.

13. Close front left intake grille door (TM 5-5420-202-10).

End of Task

TA248315

PRIMARY FUEL FILTER REPLACEMENT (Sheet 1 of 4)

PROCEDURE INDEX

PROCEDURE	PAGE
Removal	7-192
Installation	7-194

TOOLS: 1/2 in. socket with 1/2 in. drive
1/2 in. combination box and open end wrench
9/16 in. combination box and open end wrench
3/4 in. combination box and open end wrench
7/8 in. combination box and open end wrench
8 in. adjustable wrench
Ratchet with 1/2 in. drive

SPECIAL TOOLS: Ground hop kit (Item 31, Chapter 3, Section I)

SUPPLIES: Sealing compound (Item 27, Appendix D)
Drain pan

PERSONNEL: Two

PRELIMINARY PROCEDURE: Remove powerplant (page 5-2)

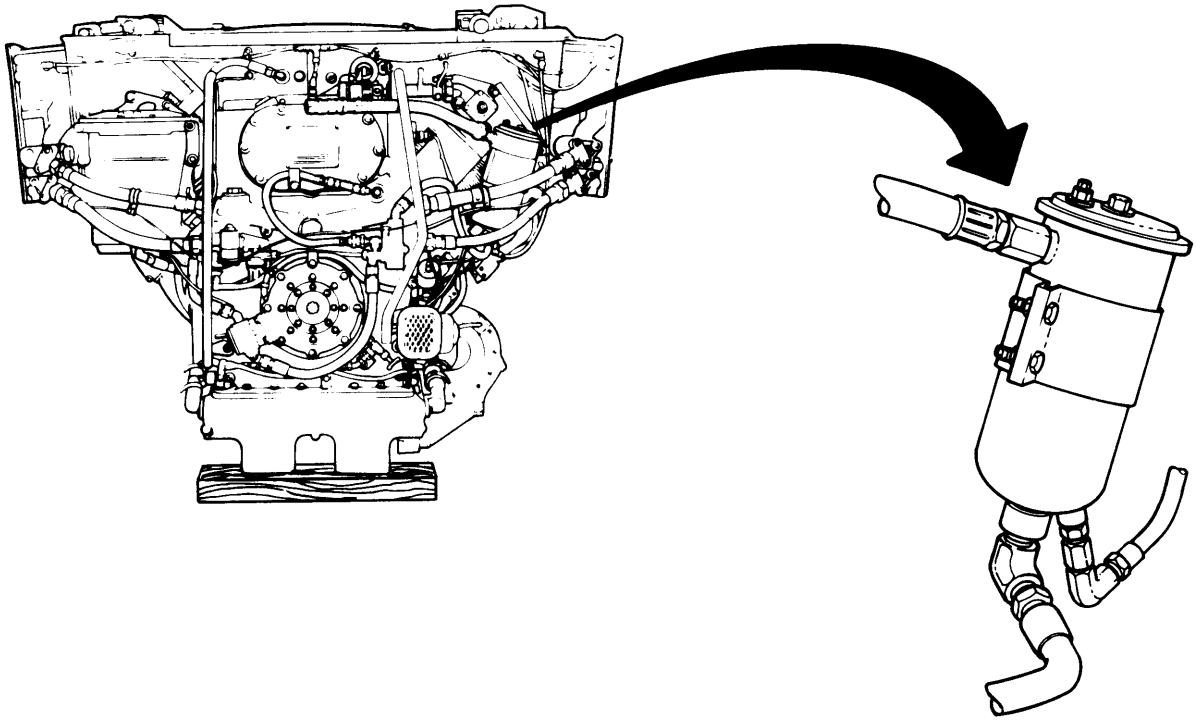

Go on to Sheet 2

TA248316

PRIMARY FUEL FILTER REPLACEMENT (Sheet 2 of 4)

REMOVAL:

1. Position a suitable container to catch fuel drainage from disconnected lines.
2. Using 9/16 inch wrench, disconnect connector (A) from fluid filter (B).
3. Using 7/8 inch wrench, disconnect hose assembly (C).
4. Using 7/8 inch wrench, disconnect fuel outlet hose (D) from fuel outlet elbow (E).
5. Using 1/2 inch socket and 1/2 inch wrench, loosen bolts (F) on bracket (G).
6. Remove primary fuel filter (H).

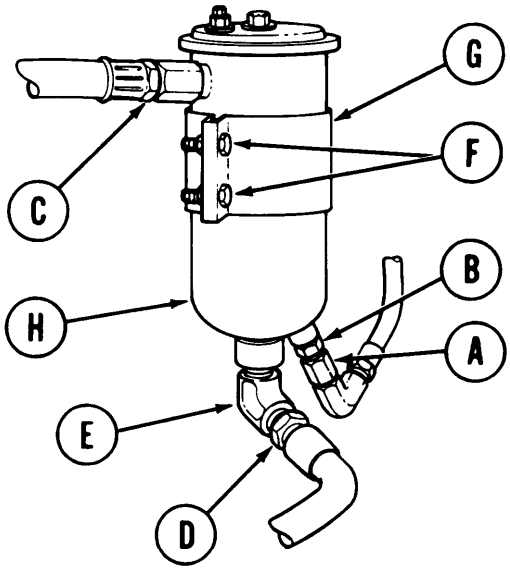

7. Using 3/4 inch wrench remove fuel outlet elbow (E).
8. Using 9/16 inch wrench remove fluid filter (B) from fuel filter (H).

Go on to Sheet 3

TA248317

PRIMARY FUEL FILTER REPLACEMENT (Sheet 3 of 4)

INSTALLATION:

1. Lightly coat elbow assembly fittings with sealing compound.
2. Using 3/4 inch wrench, install fuel outlet elbow (A) to primary fuel filter (B).
3. Using 7/8 inch wrench install hose assembly (C) to primary fuel filter (B).
4. Using 9/16 inch wrench install fluid filter (D) to primary fuel filter (B).
5. Install primary fuel filter (B).
6. Using 1/2 inch socket and 1/2 inch wrench, tighten bolts (E) on bracket (F).
7. Using 7/8 inch wrench connect fuel outlet hose (G) to fuel outlet elbow (A).

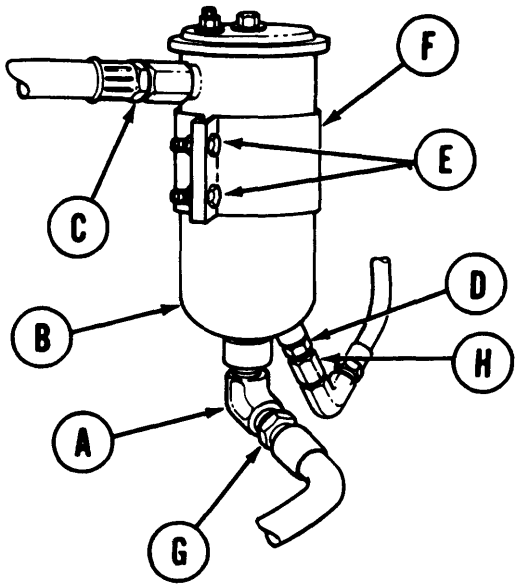

8. Using 9/16 inch wrench connect connector (H) to fluid filter (D).
9. Connect engine for powerplant ground hop (page 5-25).

Go on to Sheet 4

TA248318

PRIMARY FUEL FILTER REPLACEMENT (Sheet 4 of 4)

10. Using adjustable wrench, unscrew bleed cap (J) until it can be opened or closed using fingers. Leave valve open.

11. Using another technician, set FUEL PUMPS switch (K) on master control panel in driver's compartment to ON.

12. Set MASTER BATTERY switch (L) to ON and observe air release (bubbles) from bleed valve (J).

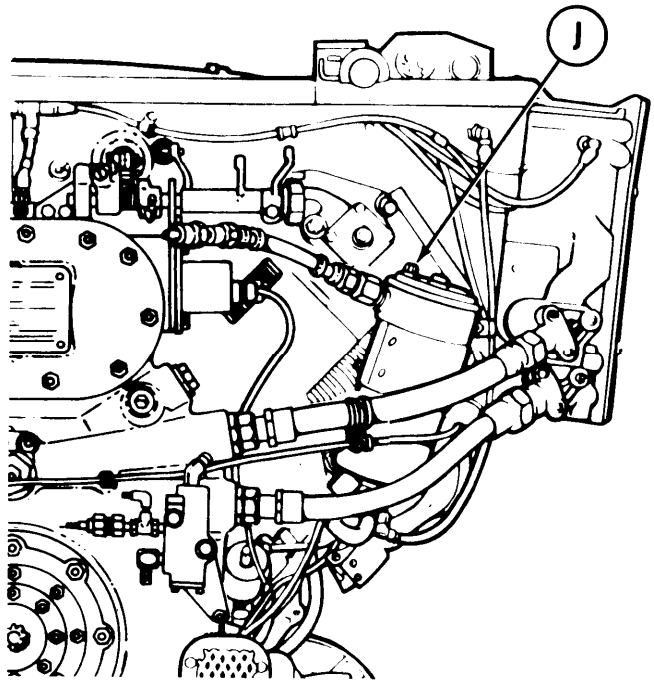

13. Set MASTER BATTERY switch (L) to OFF and, after about 1 minute, repeat step 12.

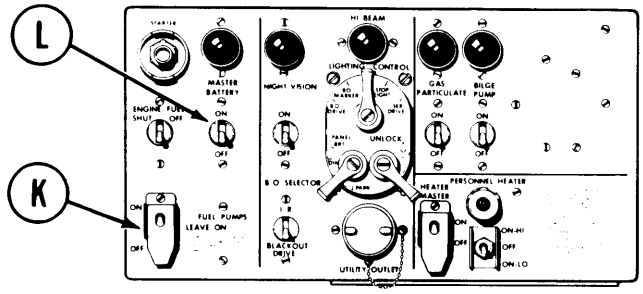

14. Repeat steps 12 and 13 until a steady flow of fuel comes out of bleed valve (J), then close bleed valve (J) and set MASTER BATTERY switch to OFF.

15. Using adjustable wrench, tighten bleed valve (J) enough so it cannot be opened with the fingers.

16. Disconnect ground hop kit (page 5-40).

17. Install powerplant (page 5-14).

End of Task

TA248319

FUEL-WATER SEPARATOR FILTER ELEMENT REPLACEMENT (Sheet 1 of 6)

PROCEDURE INDEX

PROCEDURE	PAGE
Removal	7-196
Cleaning and Inspection	7-198
Installation	7-198

TOOLS: 7/16 in. combination box and open end wrench
7/8 in. combination box and open end wrench

SUPPLIES: Dry cleaning solvent (Item 55, Appendix D)
Parts kit
Drain pan
Rags (Item 12, Appendix D)
Crocus cloth (Item 14, Appendix D)
Plastic barrier material (Item 42, Appendix D)
1/2 in. masking tape (Item 58, Appendix D)
Lockwashers
Gloves (Item 69, Appendix D)
Goggles (Item 70, Appendix D)

PERSONNEL: Two

PRELIMINARY PROCEDURE: Remove powerplant (page 5-2)

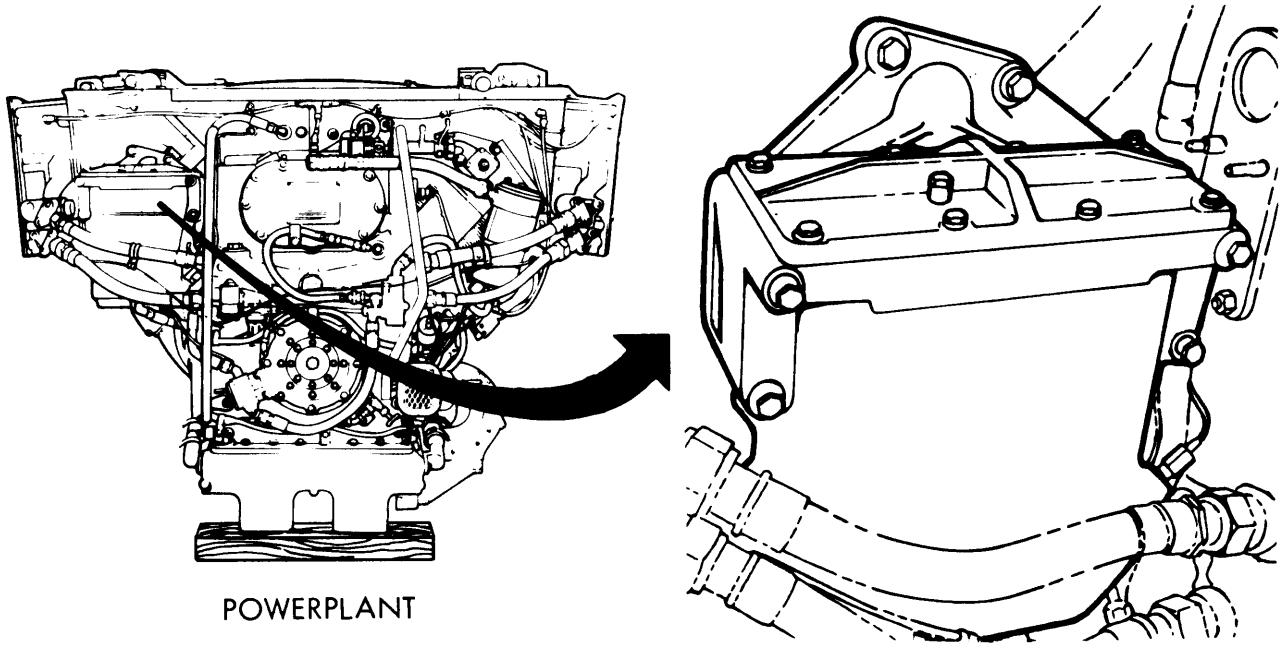

Go on to Sheet 2

TA248320

FUEL-WATER SEPARATOR FILTER ELEMENT REPLACEMENT (Sheet 2 of 6)

REMOVAL:

NOTE

Use suitable container to catch fuel spillage whenever any fuel line or fitting is loosened or removed. Use cloth to wipe any spillage. Discard cloth and drained fuel in accordance with local procedures.

NOTE

Clean cover and surrounding area to make sure no dirt falls into fuel-water separator.

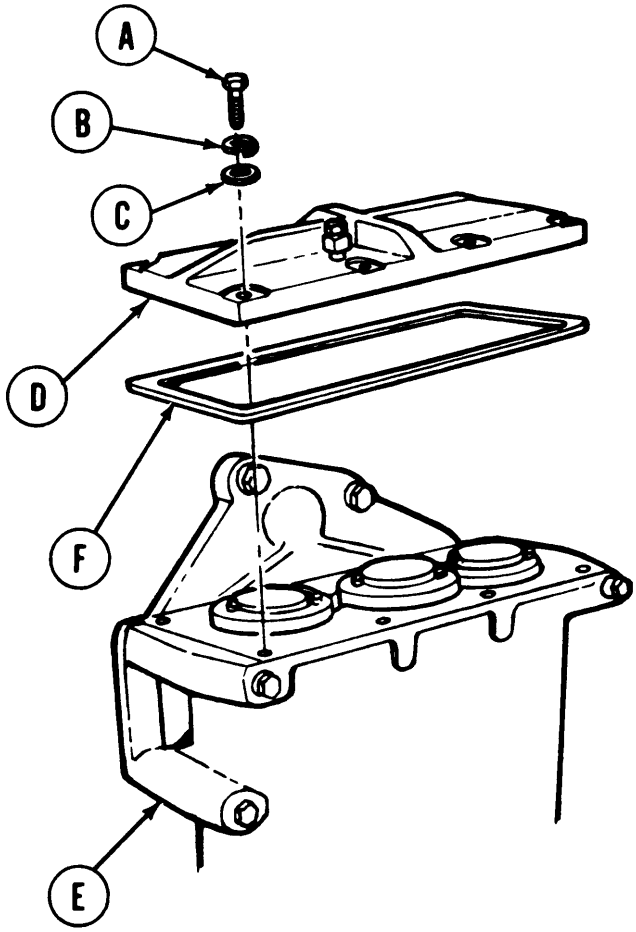

1. Using 7/16 inch wrench, remove eight screws (A), lockwashers (B), and flat washers (C).

2* Remove cover (D) from fuel-water separator (E).

3. Remove preformed packing (F) from cover (D). Throw away packing.

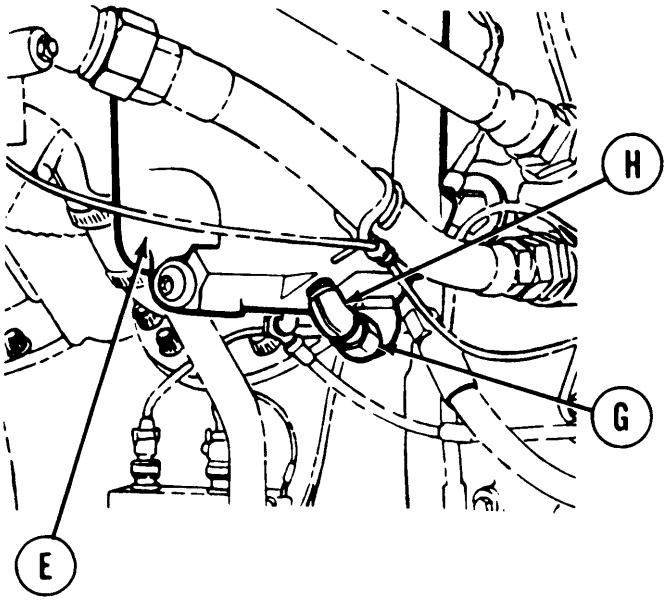

4. Place container under fuel-water separator (E) to catch fuel from fuel outlet line.

5. Using 7/8 inch wrench, disconnect fuel outlet line (G) from elbow (H).

6. Using plastic barrier material and 1/2 inch masking tape, cover fuel outlet line (G) to avoid getting dirt into line.

Go on to Sheet 3

TA248321

FUEL-WATER SEPARATOR FILTER ELEMENT REPLACEMENT (Sheet 3 of 6)

CAUTION

Do not remove or otherwise disturb the center element (J) during outer filter element (K) replacement unless all three elements are scheduled for replacement.

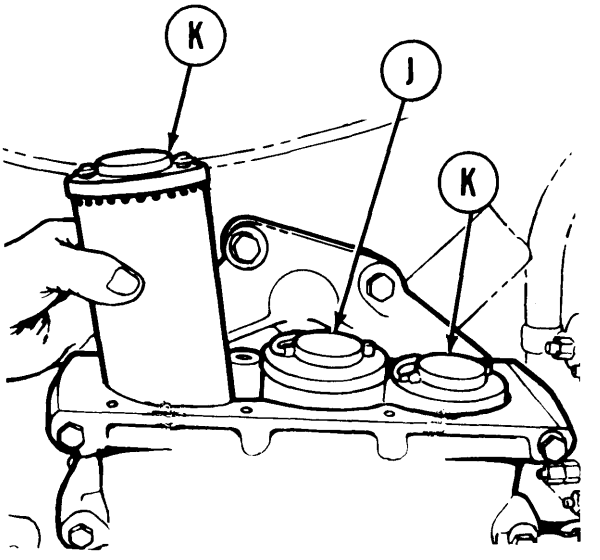

7. Using hands, remove two outer filter elements (K) by turning slightly and lifting out.

8. Remove center filter element (J) in same manner as outer filters, if required.

CLEANING AND INSPECTION:

WARNING

Dry cleaning solvent P-D-680 is toxic and flammable. To prevent personal injury, wear protective goggles and gloves and use only in a well-ventilated area. Avoid contact with skin, eyes, and clothes and don't breathe vapors. Do not use near open flame or excessive heat. The flash point for Type #1 Dry Cleaning Solvent is 100°F (38°C) and for Type #2 is 138°F (50°C). If you become dizzy while using cleaning solvent, get fresh air immediately and get medical aid. If contact with eyes is made, wash your eyes with water and get medical aid immediately.

NOTE

Exercise care when cleaning inside of fuel-water separator not to damage any internal parts.

1. Using dry cleaning solvent and cloth, clean inside of fuel-water separator.

2. Inspect fuel-water separator for cracks. Inspect interior for scores and burrs.

3. Using dry cleaning solvent and crocus cloth, remove minor burrs and scores. If cracked, excessively burred, or scored, contact your supervisor.

4. Flush with clean dry cleaning solvent.

INSTALLATION:

1. Remove container from under fuel-water separators

2. Remove plastic barrier material and tape from fuel outlet line (A).

3. Using 7/8 inch wrench, install fuel outlet line (A) to elbow (B).

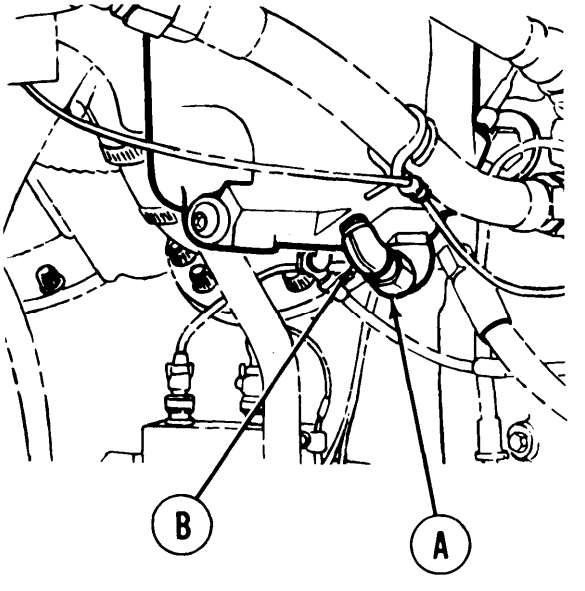

TA248322

Go on to Sheet 4

FUEL-WATER SEPARATOR FILTER ELEMENT REPLACEMENT (Sheet 4 of 6)

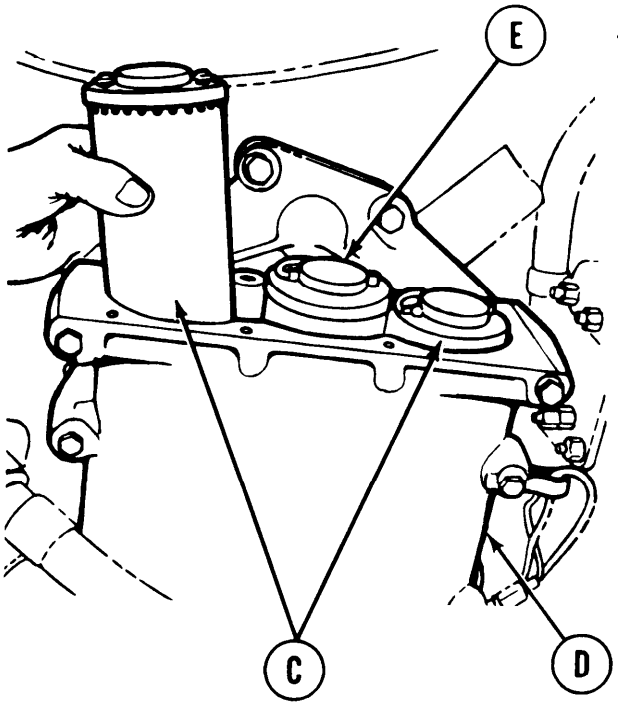

4. Place two new outer filter elements (C) in position in fuel-water separator (D).

5. Place new center filter element (E) in position in fuel-water separator (D), if required.

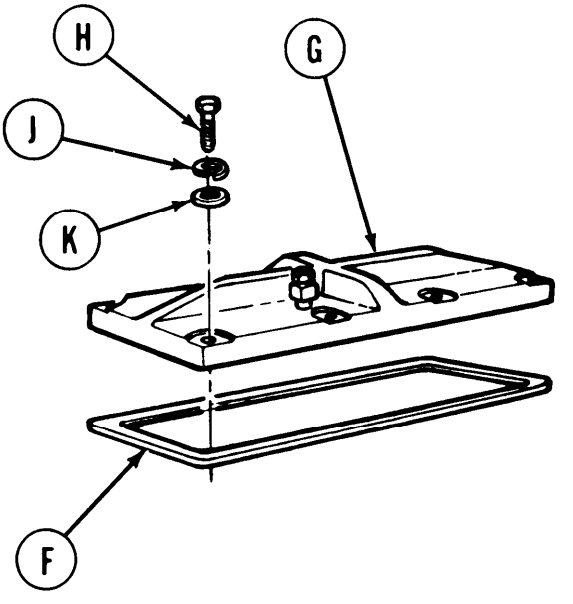

6. Place new preformed packing (F) in position in cover (G).

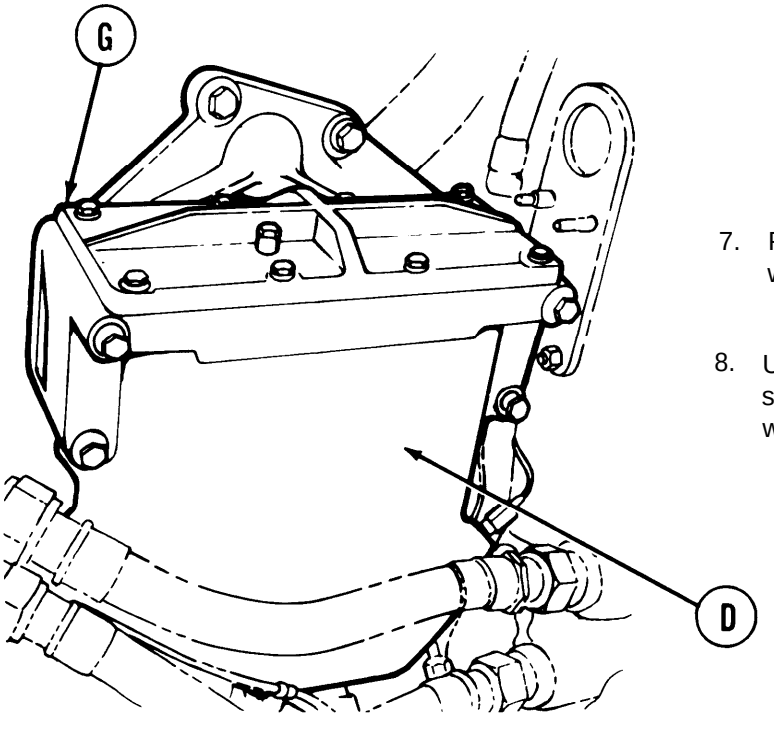

7. Place cover (G) in position on fuel-water separator (D).

8. Using 7/16 inch wrench, install eight screws (H), lockwashers (J) and flat washers (K).

Go on to Sheet 5

TA248323

FUEL-WATER SEPARATOR FILTER ELEMENT Replacement (Sheet 5 of 6)

9. Install powerplant (page 5-14).

NOTE
The following steps require the assistance of another person located in the driver's compartment.

10. Remove engine upper access cover (page 17-11).

11. Locate fuel-water separator (D), and using 7/16 inch wrench, loosen bleeder valve (L). Do not remove.

12. Person in driver's compartment set FUEL PUMPS switch (M) ON and MASTER BATTERY switch (N) ON.

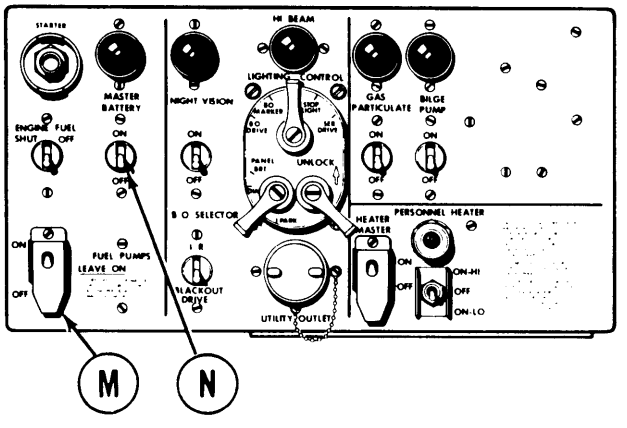

13. Person at fuel-water separator (D) observe for air release (bubbles) from bleeder valve (L).

14. Person in driver's compartment set MASTER BATTERY switch (N) OFF.

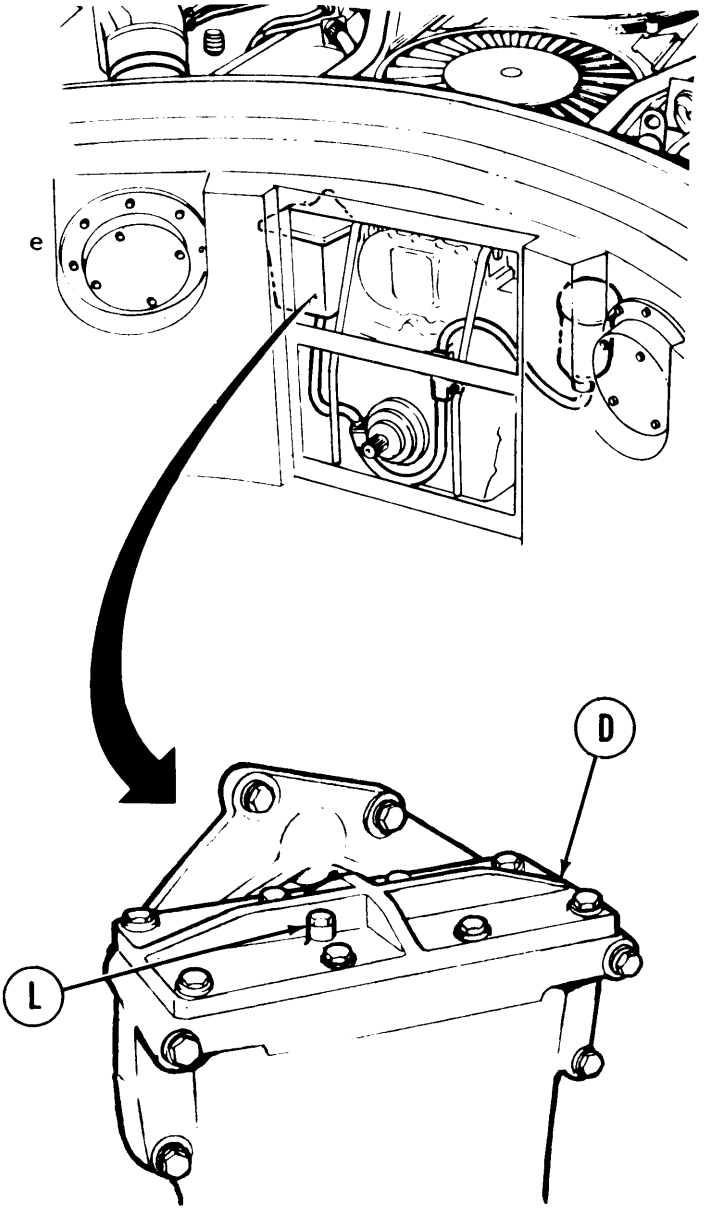

Go on to Sheet 6

TA248324

FUEL-WATER SEPARATOR FILTER ELEMENT REPLACEMENT (Sheet 6 of 6)

15. After about a minute, repeat steps 12 through 14. It may be necessary to do this several times until a constant flow of fuel is observed.

16. Using 7/16 inch wrench, tighten bleeded valve (L).

17. Install engine upper access cover (page 17-12).

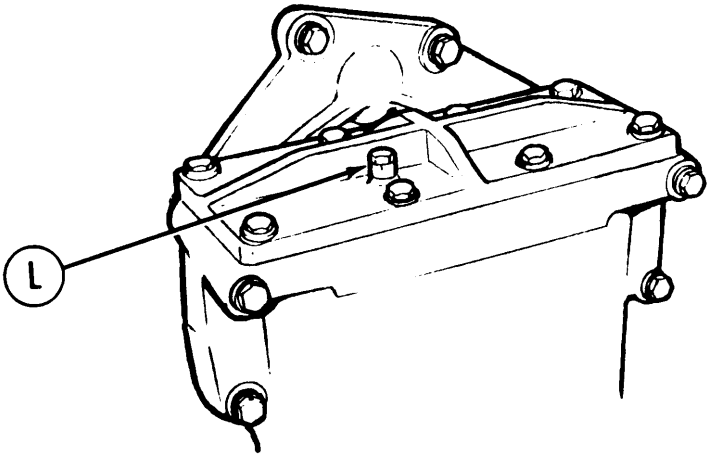

End of Task

TA248325

FUEL-WATER SEPARATOR FLUID PRESSURE FILTER ASSEMBLY REPLACEMENT (Sheet 1 of 7)

PROCEDURE INDEX

PROCEDURE	PAGE
Removal	7-202
Installation	7-206
Test	7-20

TOOLS: 1/8 in. drive punch
1/2 in. combination box and open end wrench
9/16 in. combination box and open end wrench
7/8 in. combination box and open end wrench
1/2 in. socket with 1/2 in. drive
5 in. extension with 1/2 in. drive
Ratchet with 1/2 in. drive
Hammer

SPECIAL TOOLS: Ground hop kit (Item 31, Chapter 3, Section I)

SUPPLIES: Drip pan
Rags (Item 65, Appendix D)
1/2 in. masking tape (Item 58, Appendix D)
Plastic barrier material (Item 42, Appendix D)
Wire tags
Lockwashers

REFERENCE: TM 5-5420-202-10

PRELIMINARY PROCEDURE: Remove powerplant (page 5-2)

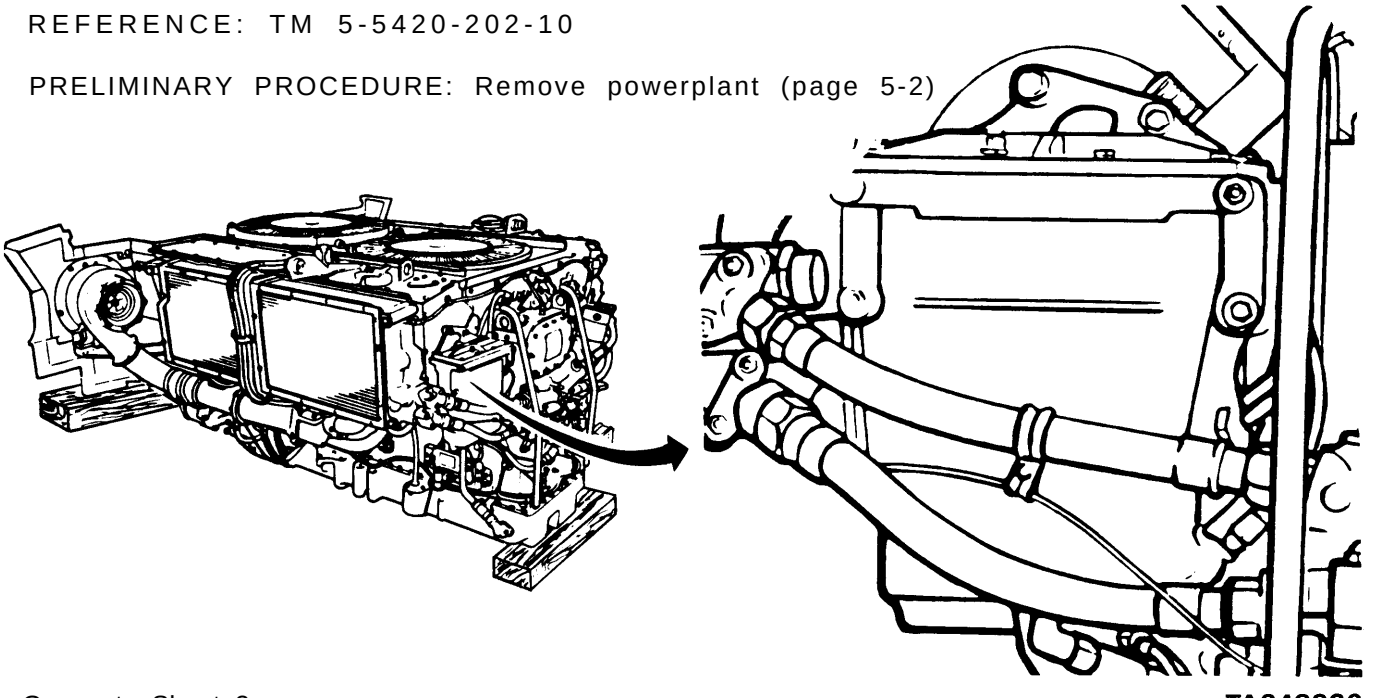

Go on to Sheet 2

TA248326

FUEL-WATER SEPARATOR FLUID PRESSURE FILTER ASSEMBLY REPLACEMENT (Sheet 2 of 7)

REMOVAL:

1. Place drip pan under manual drain valve (A).
2. Open manual drain valve (A) by turning valve handle counterclockwise.

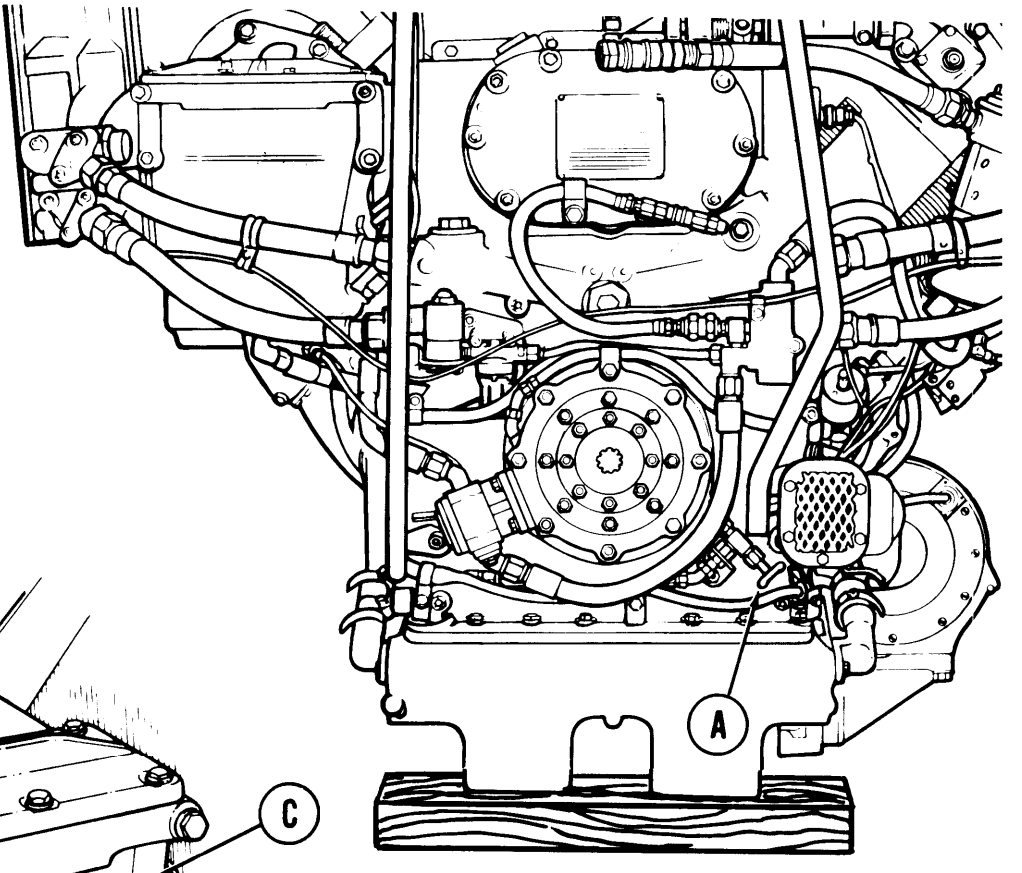

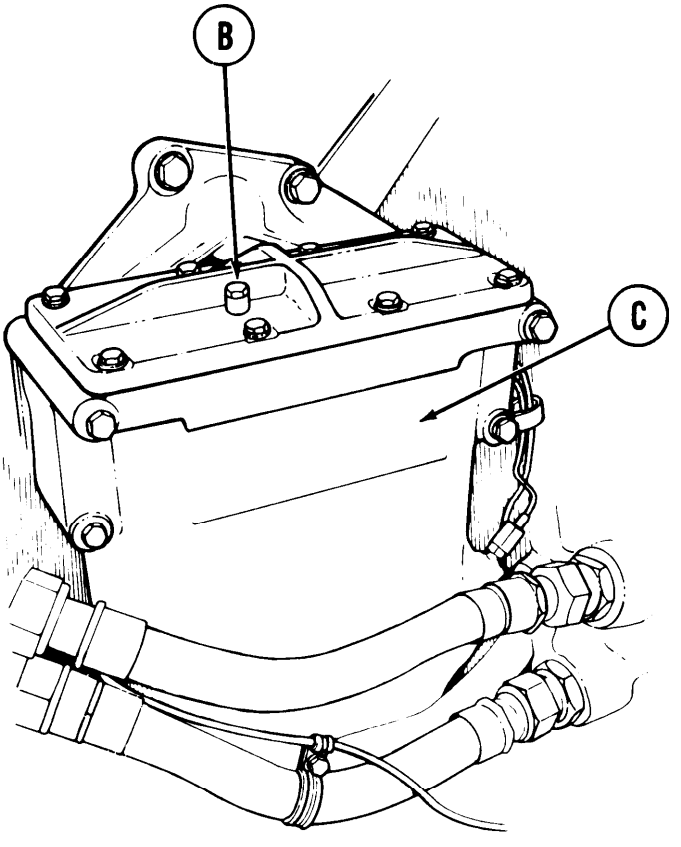

3. Using 1/2 inch wrench, turn bleed valve (B) counterclockwise until loose.
4. Allow fuel in fuel-water separator filter (C) to drain through manual drain valve (A).
5. Using 1/2 inch wrench, turn bleed valve (B) clockwise until snug.
6. Close manual drain valve (A) by turning valve handle counterclockwise.
7. Place drip pan under fuel-water separator filter (C).

Go on to Sheet 3

TA248327

FUEL-WATER SEPARATOR FLUID PRESSURE FILTER ASSEMBLY REPLACEMENT (Sheet 3 of 7)

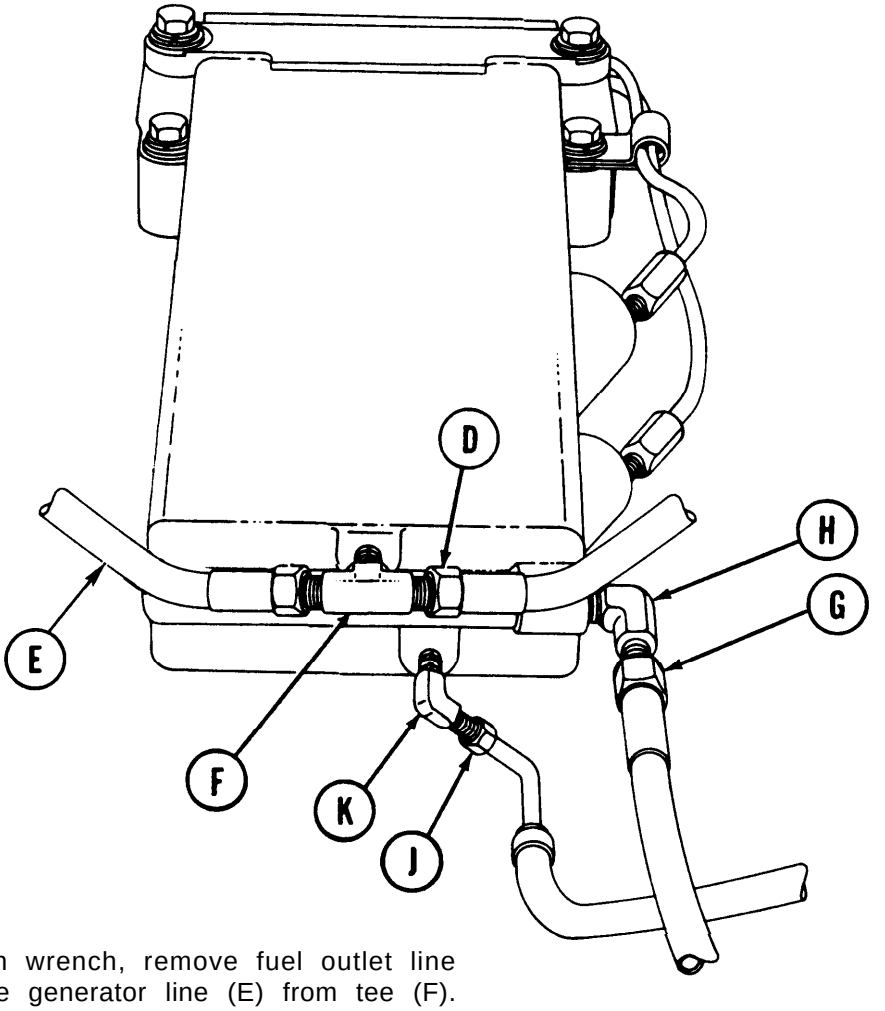

7. Using 7/8 inch wrench, remove fuel outlet line (D) and smoke generator line (E) from tee (F).

8. Using plastic barrier material and tape, seal openings of fuel outlet line (D) and tee (E).

9. Using 7/8 inch wrench, remove fuel inlet line (G) from elbow (H).

10. Using plastic barrier material and tape, seal openings of fuel inlet line (G) and elbow (H).

11. Using 9/16 inch wrench, remove condensate drain line (J) from elbow (K).

Go on to Sheet 4

TA248328

FUEL-WATER SEPARATOR FLUID PRESSURE FILTER ASSEMBLY REPLACEMENT (Sheet 4 of 7)

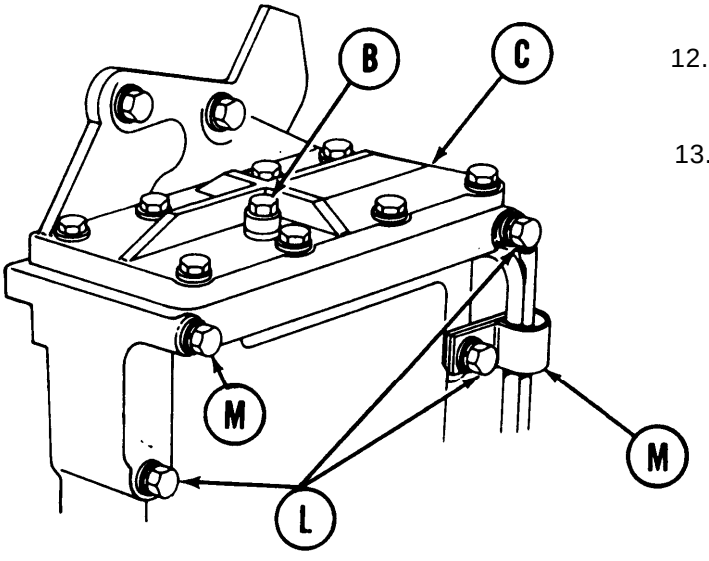

12. Using 1/2 inch socket and extension, remove three capscrews, lockwashers, and washers (L).

13. Remove clamp (M) from filter (C).

NOTE

It may be necessary to use hammer and punch to unseat sensors (Q and R) by tapping upward on the edge of the sensor retaining nut.

14. Using 1/2 inch socket and extension, loosen capscrew (N) to provide movement to fuel-water separator filter (C).

15. Using 9/16 inch wrench, remove upper sensor (P) from fuel-water separator filter (C).

16. Tag upper sensor (P) to make sure of correct installation.

17. Using 9/16 inch wrench, remove lower sensor (Q) from fuel-water separator filter (C).

18. Tag lower sensor (Q) to make sure of correct installation.

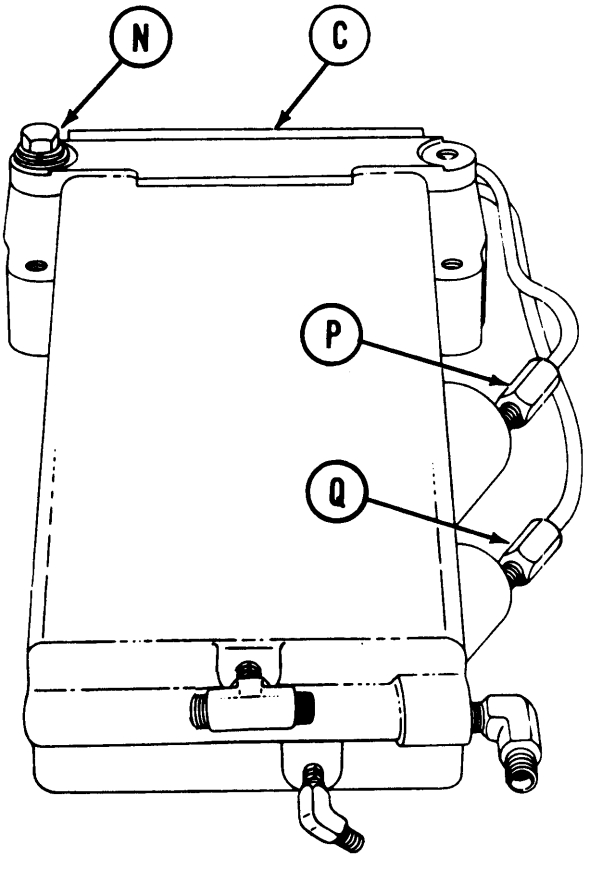

VIEW FROM BOTTOM OF FILTER (SHOWN REMOVED FROM ENGINE FOR CLARITY)

Go on to Sheet 5

TA248329

FUEL-WATER SEPARATOR FLUID PRESSURE FILTER ASSEMBLY REPLACEMENT (Sheet 5 of 7)

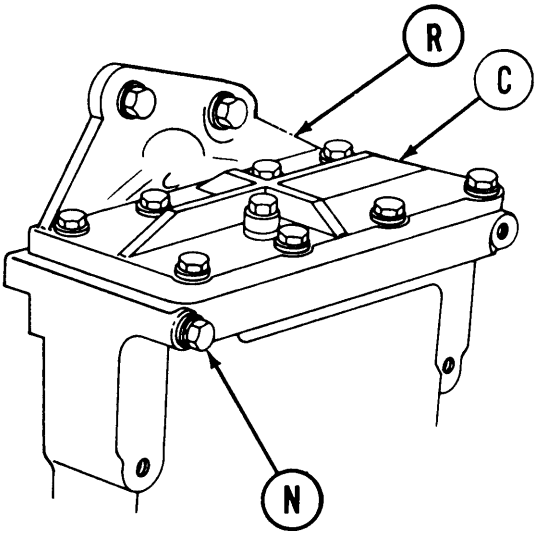

19. Support fuel-water separator filter (C) to keep it from falling.

20. Using 1/2 inch socket, remove capscrew, lockwasher, and washer (N).

21. Lift fuel-water separator filter (C) away from mounting bracket (R).

INSTALLATION:

1. Position fuel-water separator filter on mounting bracket (A).

2. Using 1/2 inch socket, loosely install capscrew, lockwasher, and washer (B).

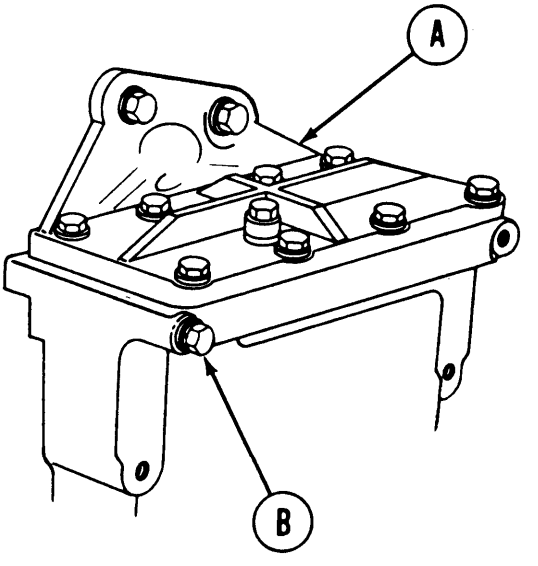

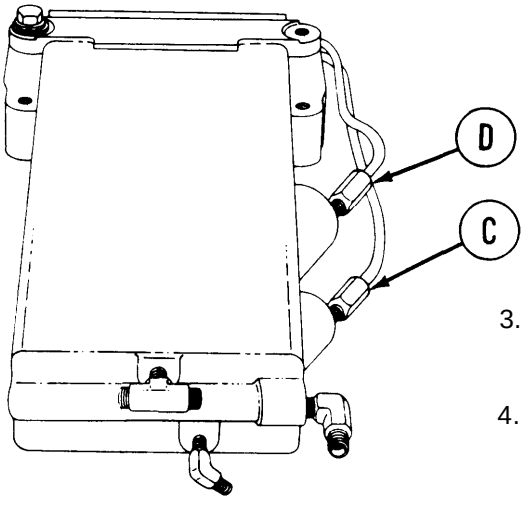

VIEW FROM BOTTOM OF FILTER (SHOWN REMOVED FROM ENGINE FOR CLARITY)

3. Using 9/16 inch wrench, install lower sensor (C) to fuel-water separator filter. Remove tag.

4. Using 9/16 inch wrench, install upper sensor (D) to fuel-water separator filter. Remove tag.

Go on to Sheet 6

TA248330

FUEL-WATER SEPARATOR FLUID PRESSURE FILTER ASSEMBLY REPLACEMENT (Sheet 6 of 7)

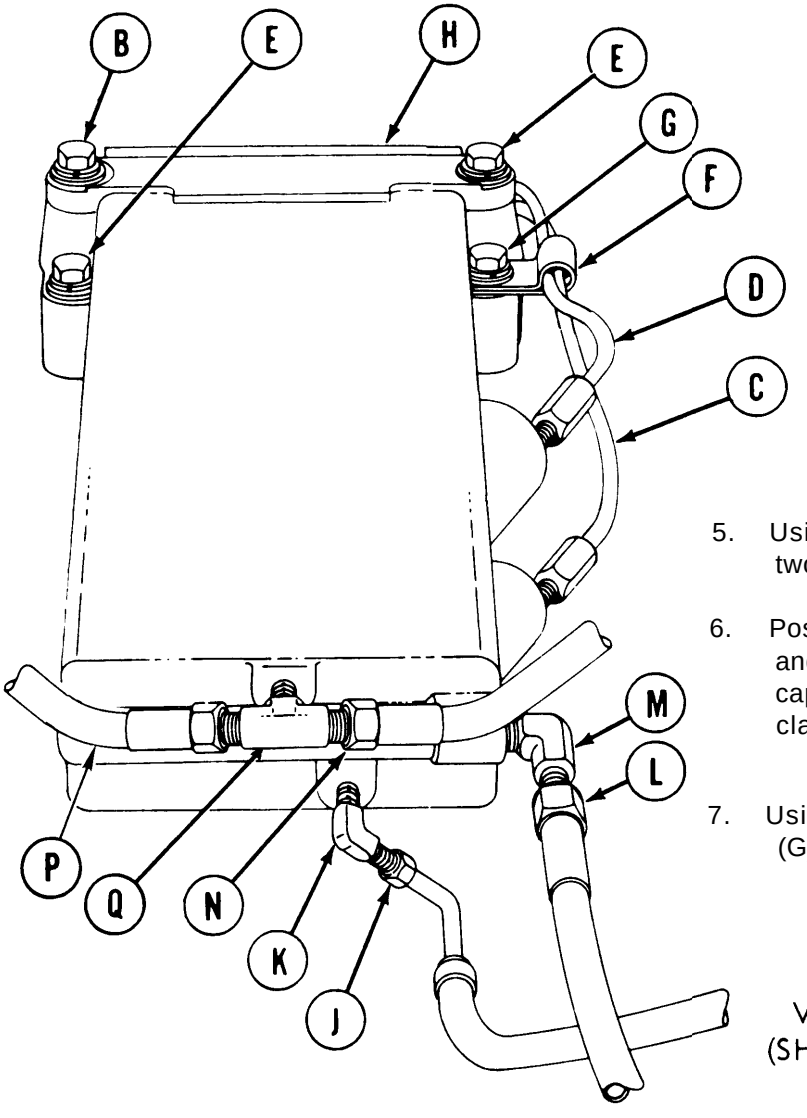

5. Using 1/2 inch socket and extension, install two capscrews, lockwashers, and washers (E).

6. Position clamp (F) around sensor wires (C) and (D) and, using 1/2 inch socket, install capscrew, lockwasher, and washer (G) and clamp (F) onto fuel-water separator filter (H).

7. Using 1/2 inch socket, tighten capscrews (B) (G) and (E).

VIEW FROM BOTTOM OF FILTER (SHOWN REMOVED FROM ENGINE FOR CLARITY)

8. Using 9/16 inch wrench, install condensate drain line (J) to elbow (K).

9. Remove plastic barrier material and tape from openings of fuel inlet line (L) and elbow (M).

10. Using 7/8 inch wrench, install fuel line (L) to elbow (M).

11. Remove plastic barrier material and tape from openings of fuel outlet line (N), smoke generator line (P), and tee (Q).

12. Using 7/8 inch wrench, install outlet line (N) and smoke generator line (P) to tee (Q).

Go on to Sheet 7

TA248331

FUEL-WATER SEPARATOR FLUID PRESSURE FILTER ASSEMBLY REPLACEMENT (Sheet 7 of 7)

13. Using lint-free cloth, wipe bottom of fuel-water separator filter and connecting lines clean of fuel.

14. Remove drip pan.

TEST:

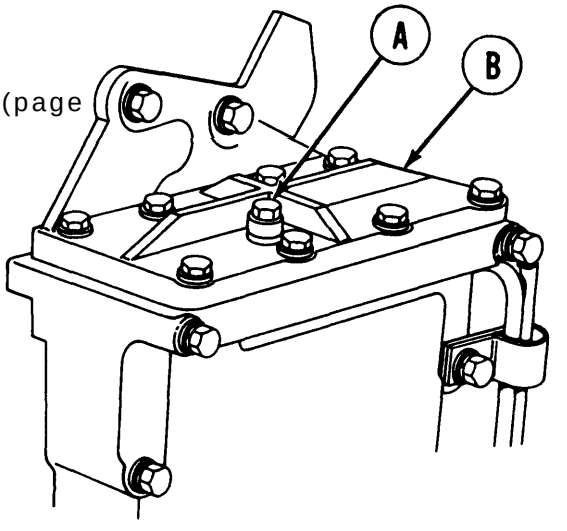

1. Connect engine for powerplant ground hop (page

2. Using 1/2 inch wrench, open bleed valve (A).

3. Set FUEL PUMPS switch on master control panel to ON (TM 5-5420-202-10).

4. Set MASTER BATTERY switch on master control panel to ON (TM 5-5420-202-10). Watch bleed cap (A) of fuel-water separator filter (B) for air release (bubbles).

5. Set MASTER BATTERY switch to OFF (TM 5-5420-202-10). When constant fuel flow is seen, go to step 6.

6. Using 1/2 inch wrench, turn fuel-water separator bleed cap (A) clockwise until snug.

7. Check valve for leaks and tighten or replace components as necessary.

8. Perform operational check of automatic drain (page 7-245).

9. Set FUEL PUMPS switch to OFF (TM 5-5420-202-10).

10. Set MASTER BATTERY switch to OFF (TM 5-5420-202-10).

11. Disconnect engine from powerplant ground hop (page 5-40).

12. Install powerplant (page 5-14).

End of Task

TA248332

FUEL-WATER SEPARATOR CONTROL ASSEMBLY REPLACEMENT (Sheet 1 of 5)

PROCEDURE INDEX

PROCEDURE	PAGE
Removal	7-209
Installation	7-212
Test	7-213

TOOLS: 1/8 in. drive punch
5/16 in. combination box and open end wrench
7/16 in. combination box and open end wrench
1/2 in. combination box and open end wrench
9/16 in. combination box and open end wrench
1/2 in. socket with 1/2 in. drive
5 in. extension with 1/2 in. drive
Hammer
Ratchet with 1/2 in. drive
Flat-tip screwdriver
Slip joint pliers

SPECIAL TOOLS: Ground hop kit (Item 31, Chapter 3, Section I)

SUPPLIES: Drip pan
Lock washers

PERSONNEL: Two

PRELIMINARY PROCEDURE: Remove powerplant (page 5-2)

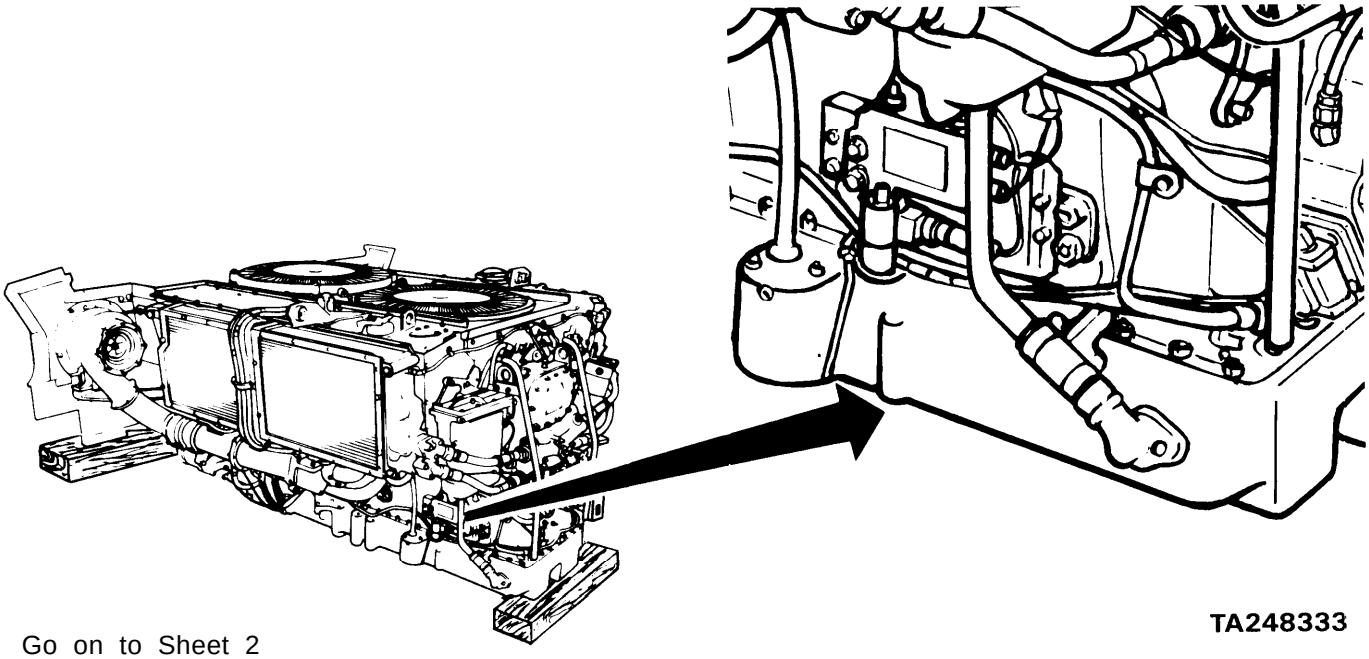

TA248333

Go on to Sheet 2

FUEL-WATER SEPARATOR CONTROL ASSEMBLY REPLACEMENT (Sheet 2 of 5)

REMOVAL:

1. Place drip pan under manual drain valve (A).

2. Open manual drain valve (A) by turning valve handle counterclockwise.

3. Using 7/16 inch wrench, turn fuel-water separator bleed valve (B) counterclockwise until loose.

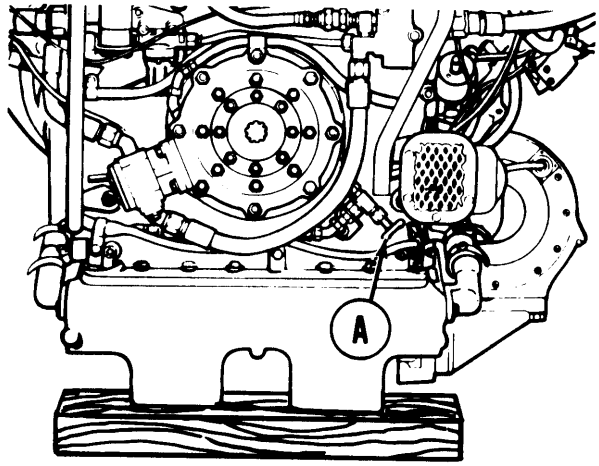

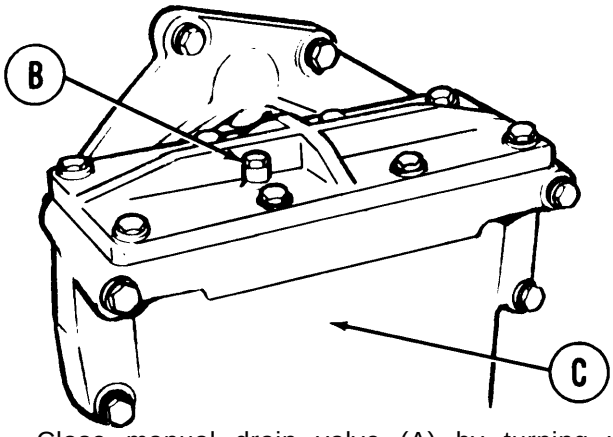

4. Allow fuel in fuel-water separator filter (C) to drain through manual drain valve (A).

5. Using 7/16 inch wrench, turn fuel-water separator bleed valve (B) clockwise until snug.

6. Close manual drain valve (A) by turning valve handle clockwise.

7. Remove drip pan placed under manual drain valve (A) and throw away drained fuel in accordance with local procedures.

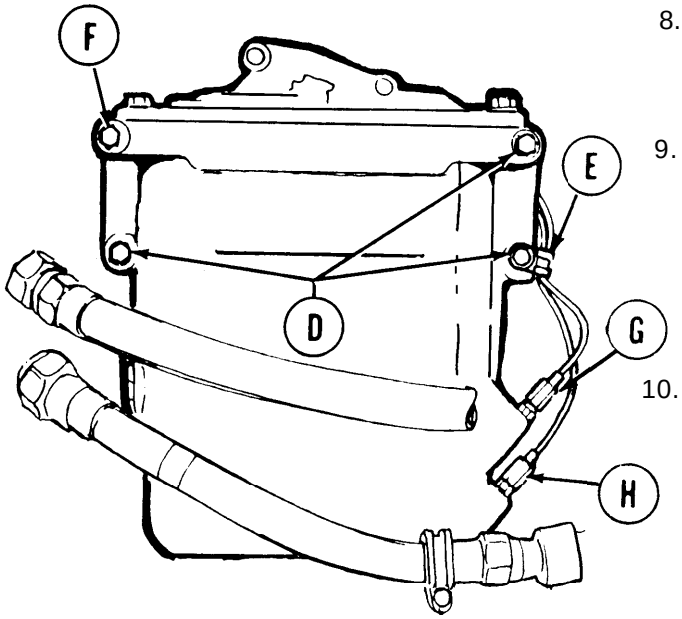

8. Using 1/2 inch socket and extension, remove three capscrews, lockwashers, flat washers (D), and clamp (E).

9. Using 1/2 inch socket and extension, loosen capscrew (F) to provide movement to fuel-water separator filter.

NOTE
If adapters turn while removing sensors, use 1/2 inch wrench to hold them in place.

10. Using 9/16 inch wrench,. remove upper sensor (G) from fuel-water separator filter.

NOTE
It may be necessary to use hammer and punch to unseat sensors (G and H) by tapping upward on the edge of the sensor retaining nut.

11. Using 9/16 inch wrench, remove lower sensor (H) from fuel-water separator filter.

Go on to Sheet 3

TA248334

FUEL-WATER SEPARATOR CONTROL ASSEMBLY REPLACEMENT (Sheet 3 of 5)

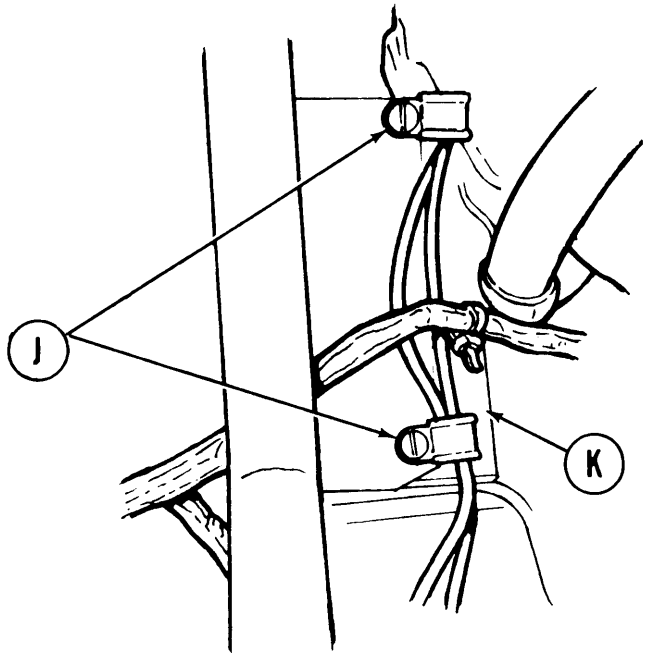

12. Using screwdriver, remove two screws and two cushioned clamps (J) and mounting plate (K) at right side and above fuel-water separator control assembly (L)

NOTE

It may be necessary to use pliers to start removal of connectors in steps 13 and 14.

13. Manually disconnect engine electrical harness connector (M) from fuel-water separator control assembly (L) l

14. Manually disconnect solenoid valve electrical lead (N) from fuel-water separator control assembly (L).

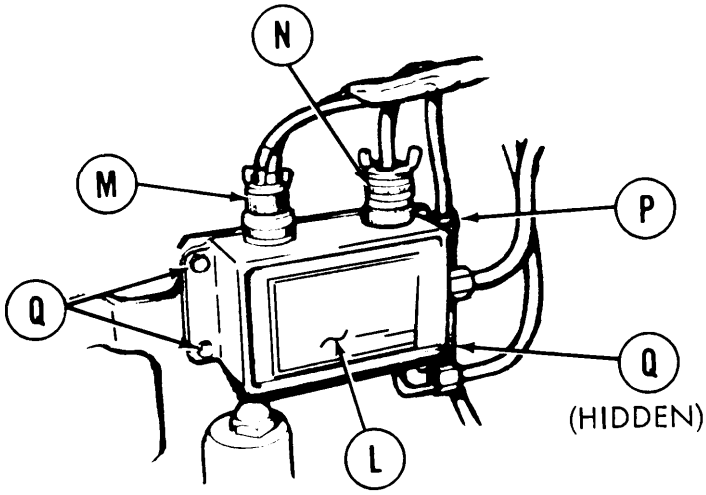

15. Using 5/16 inch wrench, remove screw and cushioned clamp (P) holding solenoid valve electrical lead (N) to fuel-water separator control assembly (L).

16. Using 5/16 inch wrench, remove three remaining screws and washers (Q) holding fuel-water separator control assembly (L) to mounting plate. Remove control assembly.

Go on to Sheet 4

TA248335

FUEL-WATER SEPARATOR CONTROL ASSEMBLY REPLACEMENT (Sheet 4 of 5)

INSTALLATION:

1. Install three clamps (A) onto sensor leads from replaced fuel-water separator control assembly (B).

2. Position fuel-water separator control assembly (B) onto mounting plate.

3. Using 5/16 inch wrench, install three screws and washers (C).

4. Using 5/16 inch wrench, install screw (D) and cushioned clamp (A) holding solenoid valve electrical lead (E) to fuel-water separator control assembly (B).

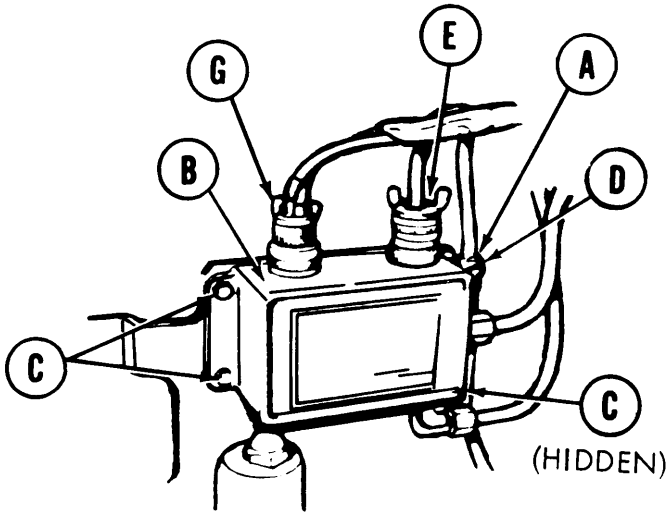

CAUTION

Be careful not to strike ends of sensors during installation or damage may result.

NOTE

Straight edge of mounting plate (F) must be installed to the right against the fuel water separator.

5. Manually connect solenoid valve electrical lead (E) to fuel-water separator control assembly (B).

6. Manually connect engine electrical harness connector (G) to fuel-water separator control assembly (B).

7. Using screwdriver, install two screws (H), two cushioned clamps (A), and mounting plate (F) at right side and above fuel-water separator control assembly.

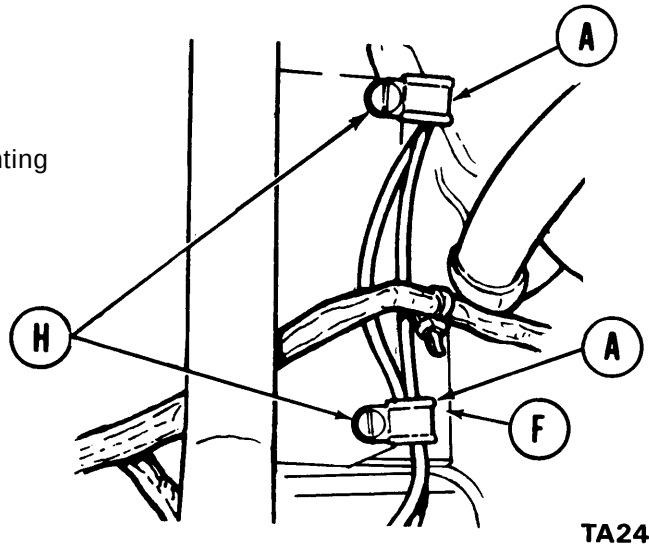

TA248336

Go on to Sheet 5

FUEL-WATER SEPARATOR CONTROL ASSEMBLY REPLACEMENT (Sheet 5 of 5)

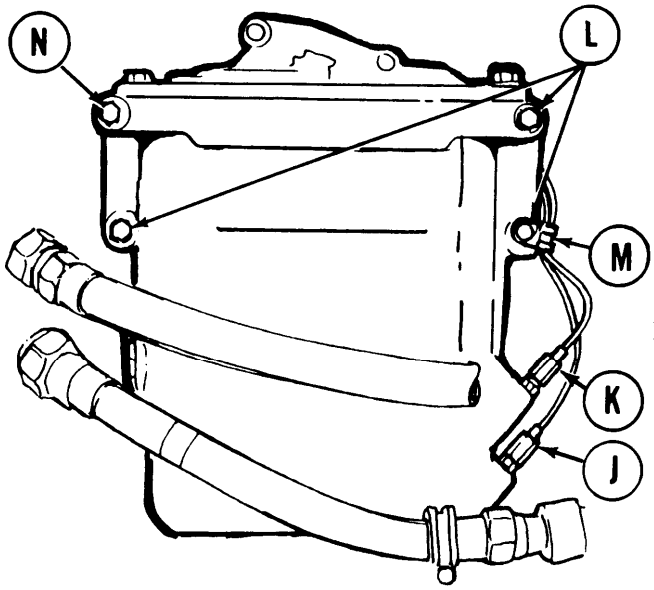

8. Using 9/16 inch wrench, install lower (longer) sensor (J) to fuel-water separator filter.

9. Using 9/16 inch wrench, install upper (shorter) sensor (K) to fuel-water separator filter.

10. Using 1/2 inch socket and extension, install three capscrews, lockwashers, and washers (L) and clamp (M).

11. Using 1/2 inch socket, tighten capscrew (N).

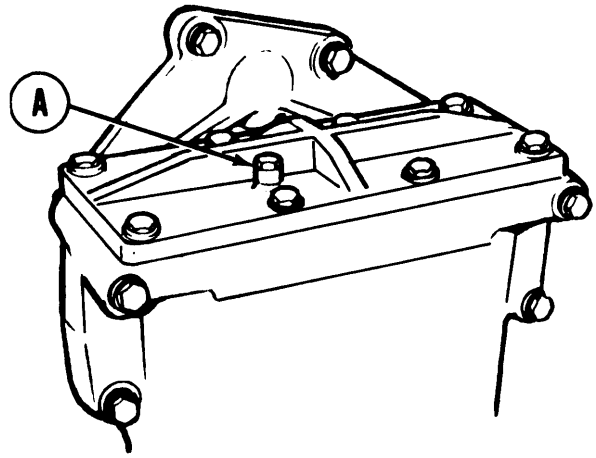

TEST:

1. Connect engine for powerplant ground hop (page 5-25).

2. Set FUEL PUMPS switch in ON position (TM 5-5420-202-10).

3. Set MASTER BATTERY switch to ON position (TM 5-5420-202-10). Watch fuel-water separator bleed cap (A) for air release (bubbles).

4. Set MASTER BATTERY switch to OFF position (TM 5-5420-202-10). After about 1 minute, repeat step 3.

5. Check for leaks and tighten or replace components as necessary.

6. Using 7/16 inch wrench, turn fuel-water separator bleed valve (A) clockwise until snug.

7. Perform operational check of automatic drain (page 7-223).

8. Set FUEL PUMPS switch to OFF position (TM 5-5420-202-10).

9. Set MASTER BATTERY switch to OFF position (TM 5-5420-202-10).

10. Disconnect engine from powerplant ground hop (page 5-40).

11. Install powerplant (page 5-14).

End of Task

TA248337

FUEL-WATER SEPARATOR DRAIN SOLENOID VALVE REPLACEMENT (Sheet 1 of 3)

TOOLS: 5/16 in. combination box and open end wrench
1/2 in. combination box and open end wrench
9/16 in. combination box and open end wrenches (2 required)
Slip joint pliers
Vise

SUPPLIES: Drip pan
Rags (Item 65, Appendix D)
Zinc chromate (Item 51, Appendix D)

PRELIMINARY PROCEDURE: Remove powerplant (page 5-2)

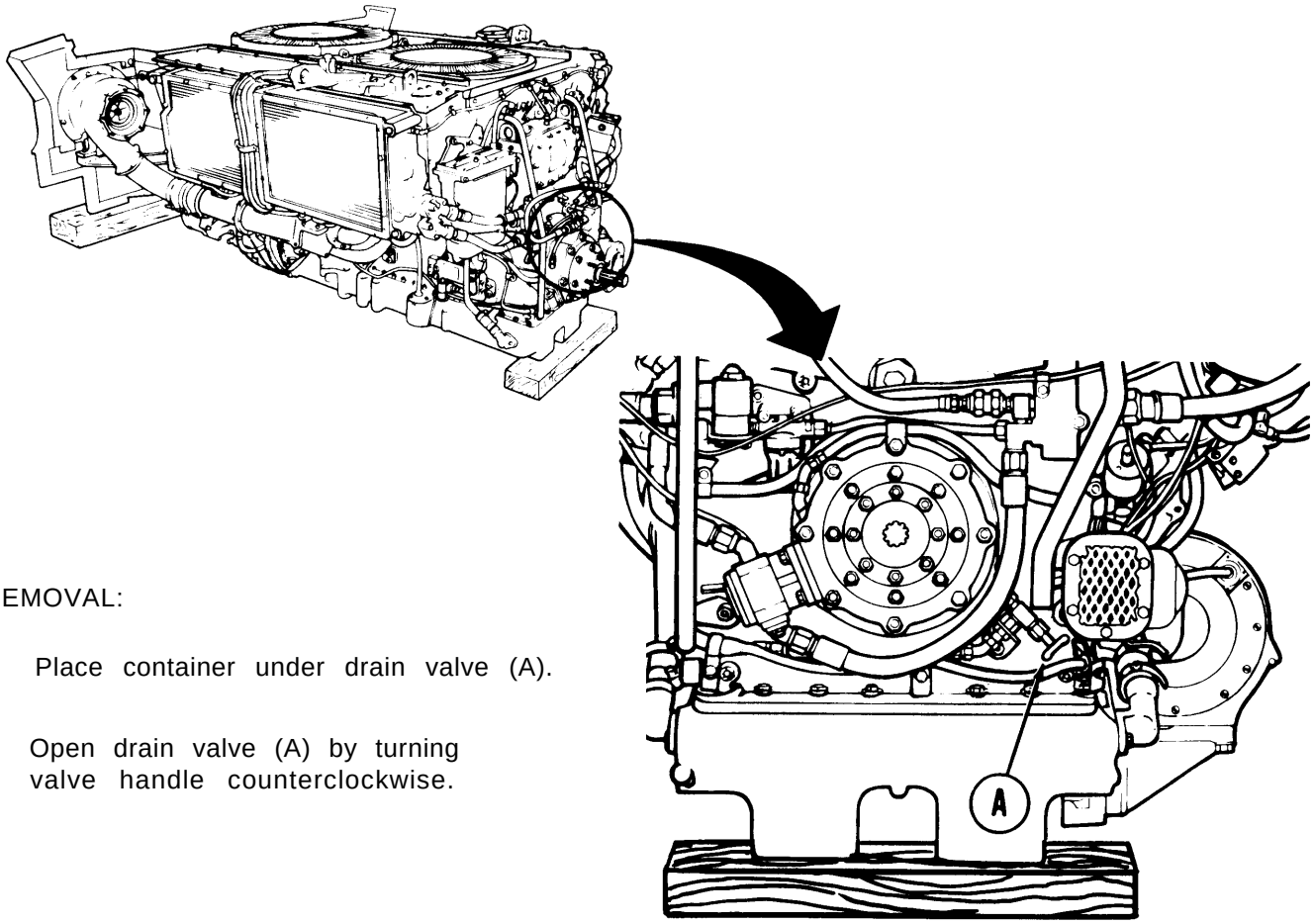

REMOVAL:

1. Place container under drain valve (A).

2. Open drain valve (A) by turning valve handle counterclockwise.

Go on to Sheet 2

TA248338

FUEL-WATER SEPARATOR DRAIN SOLENOID VALVE REPLACEMENT (Sheet 2 of 3)

3. Using 1/2 inch wrench, turn fuel-water separator bleed valve (B) counterclockwise until loose.

4. Allow fuel in fuel-water separator filter (C) to drain through drain valve (A).

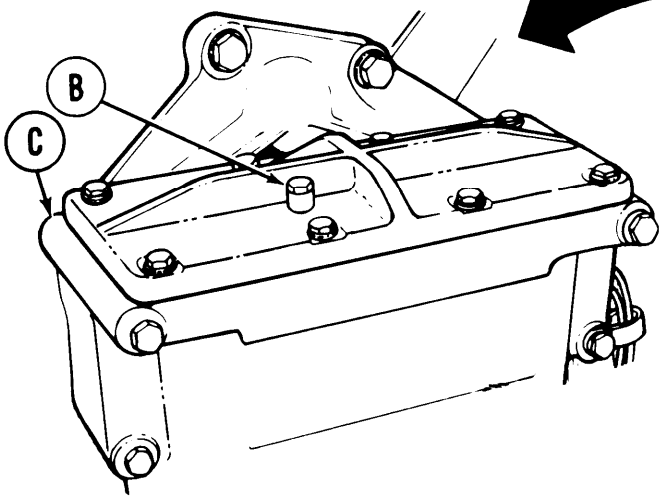

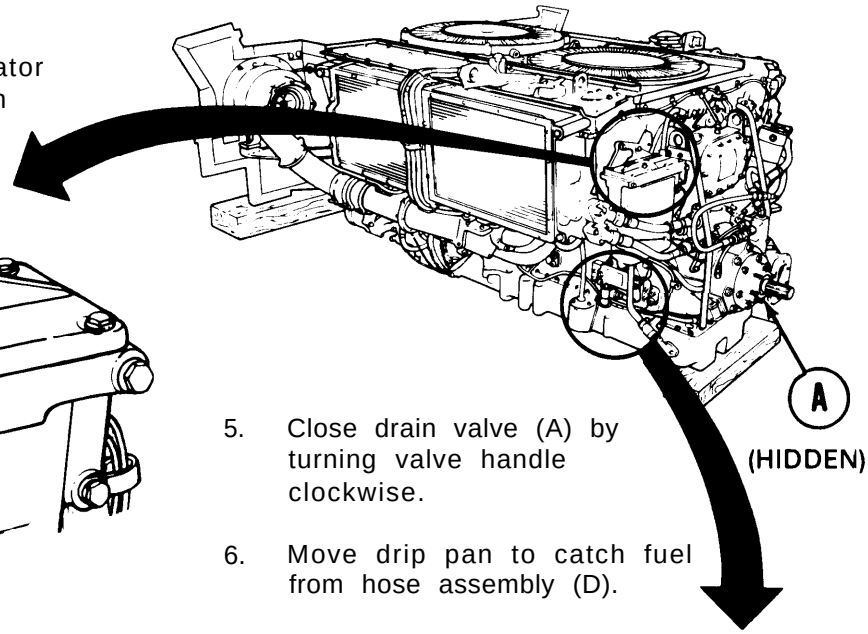

5. Close drain valve (A) by turning valve handle clockwise.

6. Move drip pan to catch fuel from hose assembly (D).

7. Using two 9/16 inch wrenches, disconnect hose assembly (D) from solenoid valve (E).

8. Using pliers, disconnect electrical lead (F) from solenoid valve (E).

9. Using 5/16 inch wrench, remove two screws and lockwashers (G) securing solenoid valve (E) to bracket.

10. Remove solenoid valve (E).

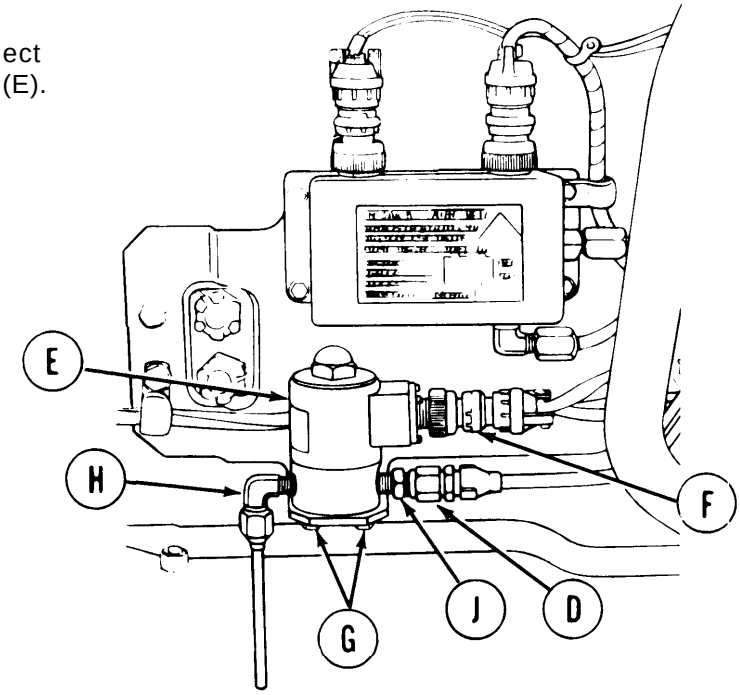

NOTE

It will be necessary to secure solenoid valve (E) in vise.

11. Using 9/16 inch wrench, remove elbow and tube (H) as a unit from solenoid valve (E).

12. Using 9/16 inch wrench, remove adapter (J) from solenoid valve (E).

Go on to Sheet 3

TA248339

FUEL-WATER SEPARATOR DRAIN SOLENOID VALVE REPLACEMENT (Sheet 3 of 3)

INSTALLATION:

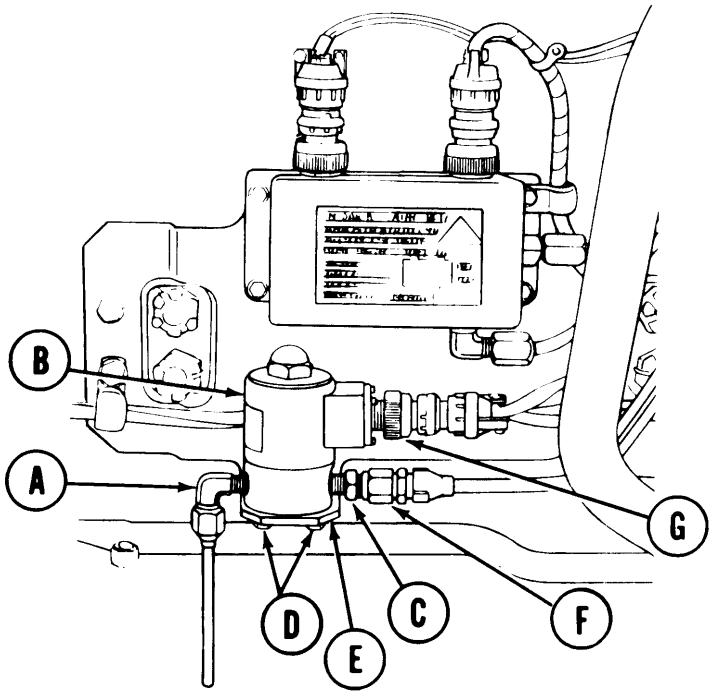

NOTE

Coat all exposed threads of adapter and elbow with zinc-chromate before installing.

1. Using 9/16 inch wrench, install elbow and tube (A) to solenoid valve (B).
2. Using 9/16 inch wrench, install adapter (C) in solenoid valve (B).
3. Position solenoid valve (B) to bracket.
4. Using 5/16 inch wrench, install two screws and lockwashers (D) to secure solenoid valve (B) to bracket (E).
5. Using two 9/16 inch wrenches, connect hose assembly (F) to adapter (C).
6. Connect electrical lead (G) to solenoid valve (B).

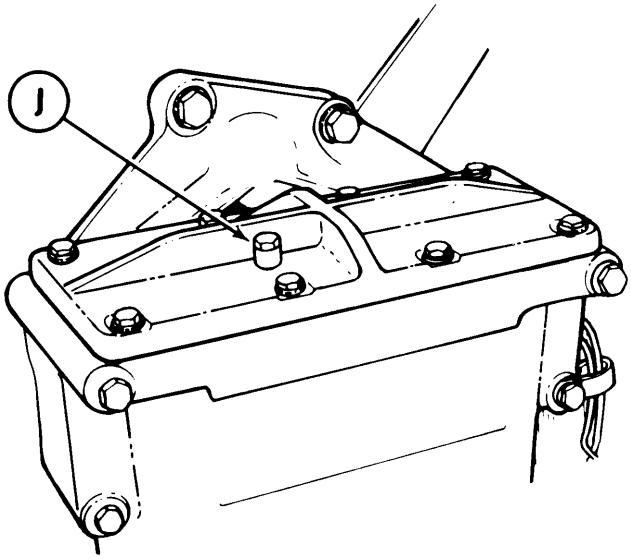

7. Using 1/2 inch wrench, turn bleed cap (H) clockwise until snug.
8. Test fuel-water separator (page 7-223).
9. Install powerplant (page 5-14).

End of Task

TA248340

FUEL-WATER SEPARATOR DRAIN LINES REPLACEMENT (Sheet 1 of 6)

PROCEDURE INDEX

PROCEDURE	PAGE
Removal	7-217
Installation	7-223

TOOLS: 11/16 in. combination box and open end wrench (2 required)
9/16 in. combinatoin box and open end wrench
1/2 in. combination box and open end wrench
5/8 in. combination box and open end wrench
6 in. adjustable wrench
Vise
Slip joint pliers
Drip pan

SUPPLIES: Rags (Item 65, Appendix D)
Drip pan
Lockwasher

PRELIMINARY PROCEDURE: Remove powerplant (page 5-2)

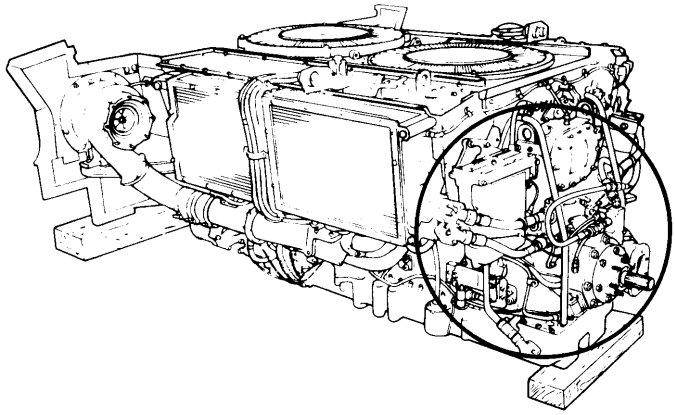

NOTE

These procedures are given for the replacement of all fuel-water separator drain lines. Only perform those steps necessary to replace the defective part.

Go on to Sheet 2

TA248341

FUEL-WATER SEPARATOR DRAIN LINES REPLACEMENT (Sheet 2 of 6)

REMOVAL:

1. Place drip pan under manual drain valve (A).

2. Open manual drain valve (A) by turning valve handle counterclockwise.

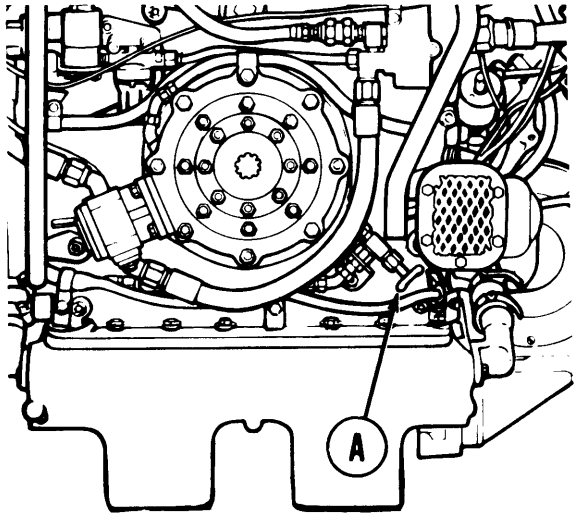

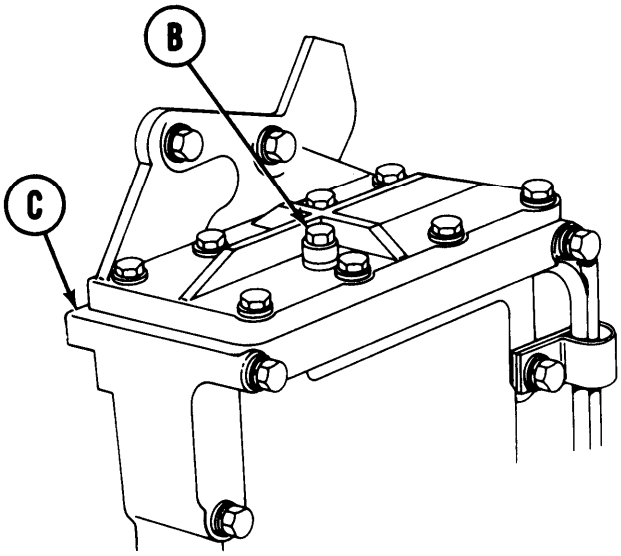

3. Using 1/2 inch wrench, turn bleed cap (B) counterclockwise until loose.

4. Allow fuel in fuel-water separator filter (C) to drain through manual drain valve (A).

5. Using 1/2 inch wrench, turn bleed cap (B) clockwise until snug.

Go on to Sheet 3

TA248342

FUEL-WATER SEPARATOR DRAIN LINES REPLACEMENT (Sheet 3 of 6)

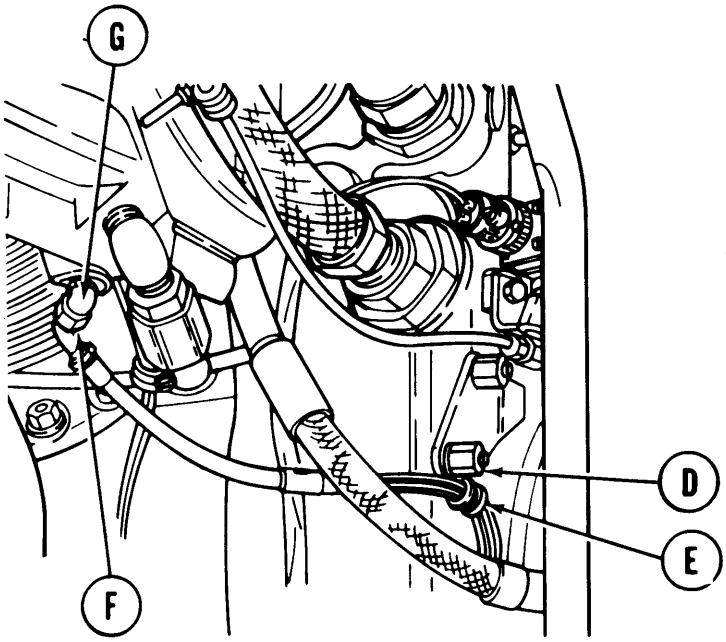

6. Using 9/16 inch wrench, remove nut (D) securing clamp (E).

7. Remove clamp (E) from hose assembly (F).

8. Using 9/16 inch wrench, disconnect hose assembly (F) from elbow (G).

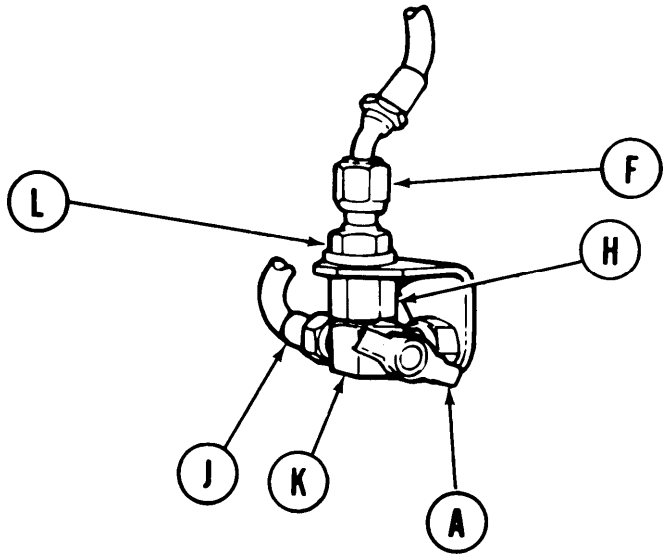

9. Using 11/16 inch wrench to hold adapter (H), use 9/16 inch wrench and disconnect hose assembly (F) from adapter (H).

10. Remove hose assembly (F).

11. Using 9/16 inch wrench, disconnect hose assembly (J) from tee (K).

12. Using 5/8 inch wrench to hold tee (K), use adjustable wrench and remove drain valve (A).

13. Using 11/16 inch wrench to hold adapter (H), use 11/16 inch wrench and remove nut and lockwasher (L). Tee (K) and adapter (H) will fall free when nut (L) is removed.

14. Install tee (K) into vise and, using 11/16 inch wrench, remove adapter (H) from tee (K).

Go on to Sheet 4

TA248343

FUEL-WATER SEPARATOR DRAIN LINES REPLACEMENT (Sheet 4 of 6)

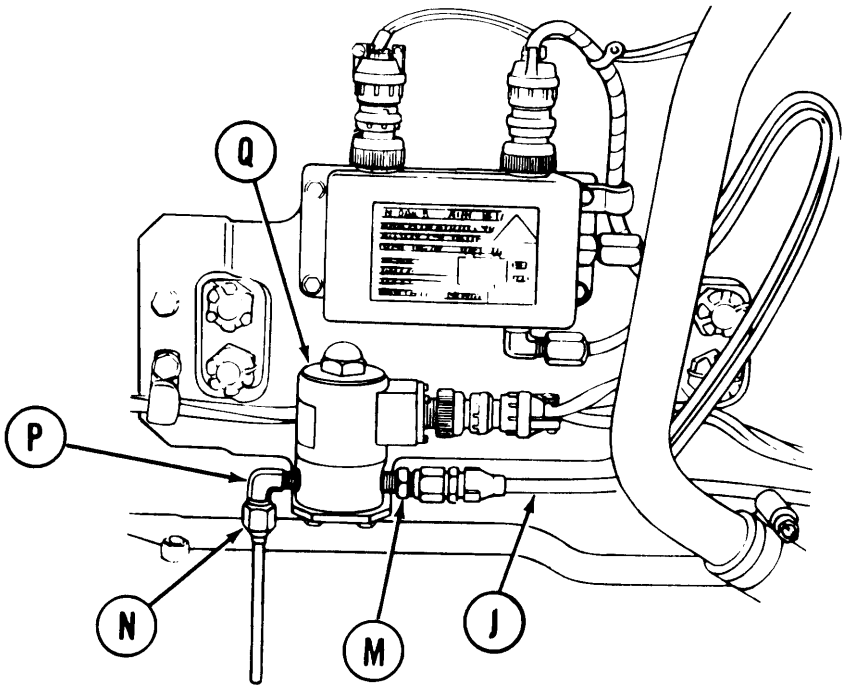

15. Using 9/16 inch wrench, disconnect hose assembly (J) from solenoid valve adapter (M).

16. Remove hose asssembly (J).

17. Using 9/16 inch wrench, disconnect tube assembly (N) from elbow (P).

18. Using 9/16 inch wrench, remove elbow (P) from solenoid valve (Q).

19. Using 9/16 inch wrench, remove adapter (M) from solenoid valve (Q).

Go on to Sheet 5

TA248344

FUEL-WATER SEPARATOR DRAIN LINES REPLACEMENT (Sheet 5 of 6)

INSTALLATION:

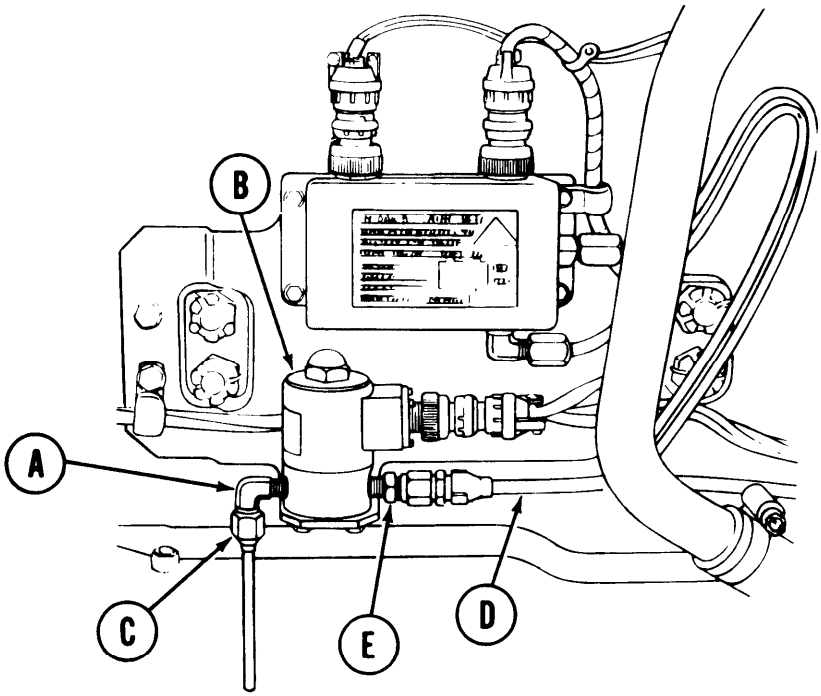

1. Using 9/16 inch wrench, install elbow (A) to solenoid valve (B).

2. Using 9/16 inch wrench, install tube assembly (C) onto elbow (A).

3. Using 9/16 inch wrench, install adapter (E) into solenoid valve (B).

4. Position hose assembly (D) to solenoid valve (B) and along engine block.

5. Using 9/16 inch wrench, install hose assembly (D) to solenoid valve adapter (E).

Go on to Sheet 6

TA248345

FUEL-WATER SEPARATOR DRAIN LINES REPLACEMENT (Sheet 6 of 6)

6. Install tee (F) into vise and, using 11/16 inch wrench, install adapter (G) into tee (F).

7. Remove tee (F) and adapter (G) assembly from vise.

8. Position tee (F) and adapter (G) assembly into mounting bracket (H).

9. Using 11/16 inch wrench to hold adapter (G), use 11/16 inch wrench and install lockwasher and nut (J) onto adapter (G).

10. Using adjustable wrench, install drain valve (K) into tee (F).

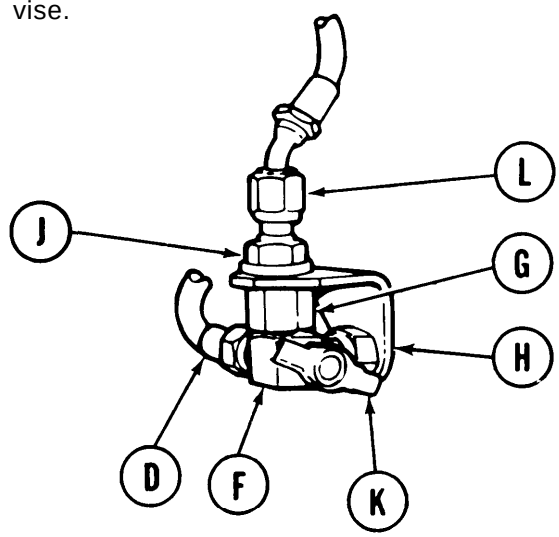

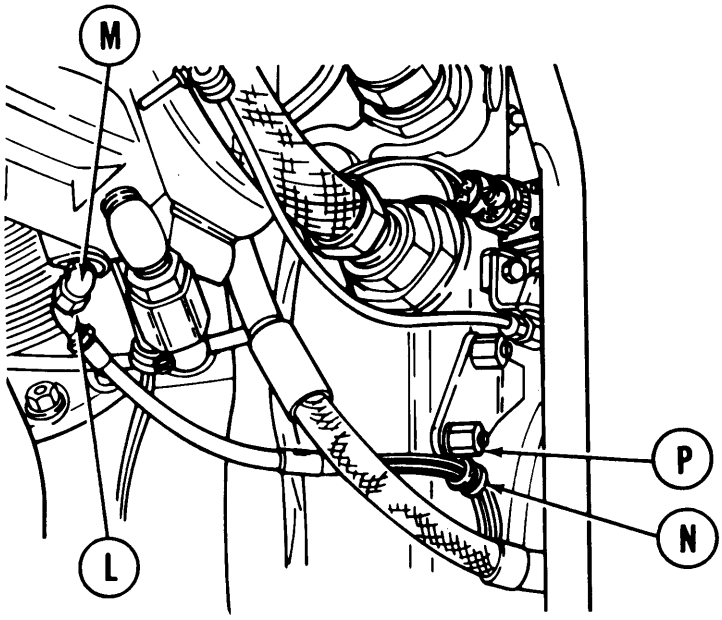

11. Position hose assembly (L) to adapter (G) and elbow (M).

12. Using 9/16 inch wrench, install hose assembly (L) to adapter (G) and elbow (M).

13. Using 9/16 inch wrench, install hose assembly (D) to tee (F).

14. Position clamp (N) onto hose assembly (L).

15. Using 9/16 inch wrench, (P) to secure clamp (N).

16. Close drain valve (K) by clockwise.

17. Test fuel-water separator (page 7-223).

18. Install powerplant (page 5-14).

End of Task

TA248346

FUEL-WATER SEPARATOR OPERATIONAL TESTS (Sheet 1 of 11)

PROCEDURE INDEX

PROCEDURE	PAGE
Manual Drain Test	7-223
Automatic Drain Test	7-226
15-Second Drain Test	7-228
Sequential Drain Test	7-230

TOOLS: 1/8 in. drive punch
5/16 in. combination box and open end wrench
7/16 in. combination box and open end wrench
1/2 in. combination box and open end wrench
9/16 in. combination box and open end wrench
7/16 in. socket with 1/2 in. drive
1/2 in. socket with 1/2 in. drive
5 in. extension with 1/2 in. drive
8 in. adjustable wrench
Connector pliers
One 3 ft. jumper wire with alligator clips on both ends
Two 10 ft. leads with alligator clips on one end and probe on other end
Ratchet with 1/2 in. drive
Hammer
Screwdriver, cross tip

SUPPLIES: 24 volt D.C. power source
1/8 in. pipe plug (2 required)
Metal container (2 gal. capacity)
Lockwashers
Fuel can
Drip pan
Gasket

PERSONNEL: Two

PRELIMINARY PROCEDURE: Remove powerplant (page 5-2)

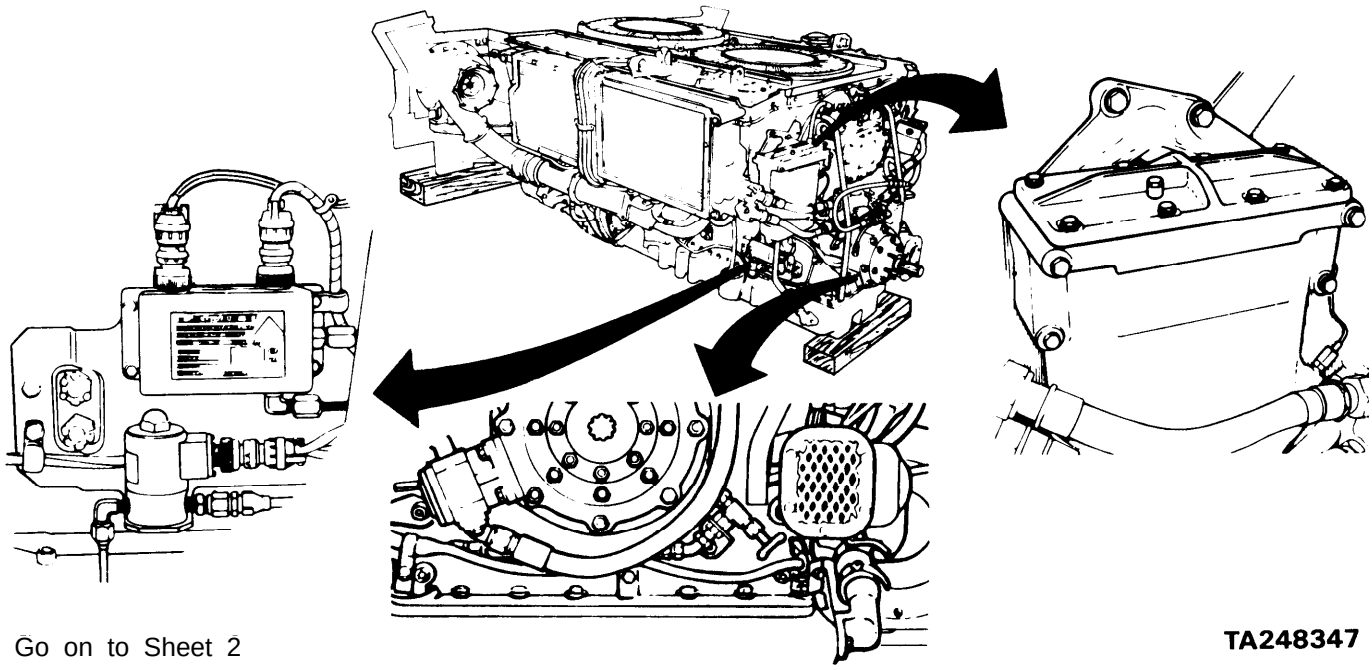

Go on to Sheet 2

TA248347

FUEL-WATER SEPARATOR OPERATIONAL TESTS (Sheet 2 of 11)

Manual Drain Test (Sheet 1 of 2)

NOTE

In order to perform any of the tests in this procedure, they must be performed in the sequence listed.

1. Place drip pan under fuel-water separator (A) and sensors (B) and (C).

2. Using 1/2 inch socket and extension, remove three capscrews, lockwashers, and washers (D).

3. Using hands, remove clamp (E) from sensor wires (B) and (C).

4. Using 1/2 inch socket and extension, loosen capscrew (F) to provide movement of fuel-water separator.

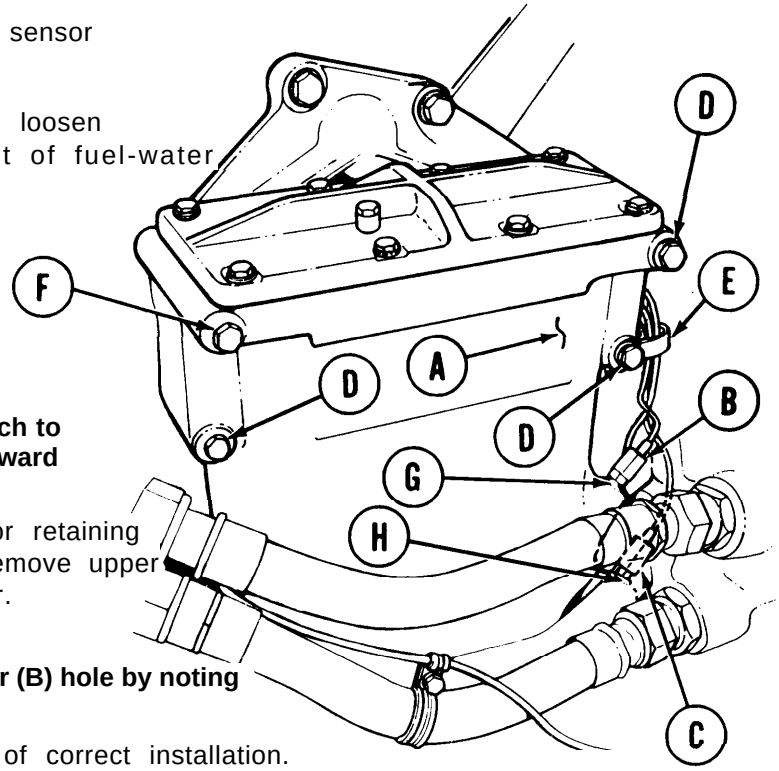

NOTE

It may be necessary to use hammer and punch to unseat sensors (B) and (C) by tapping upward on the edge of the sensor retaining nut.

5. Using 1/2 inch wrench to hold sensor retaining nut (G), use 9/16 inch wrench and remove upper sensor (B) from fuel-water separator.

NOTE

Check to see if fluid level is above upper sensor (B) hole by noting leakage when upper sensor (B) is removed.

6. Tag upper sensor (B) to make sure of correct installation.

7. Using 1/2 inch wrench, remove sensor retaining nut (G).

8. Using 5/16 inch wrench, install pipe plug into upper sensor (B) hole.

9. Using 1/2 inch wrench to hold sensor retaining nut (H), use 9/16 inch wrench and remove lower sensor (C) from fuel-water separator.

10. Tag lower sensor (C) to make sure of correct installation.

11. Using 1/2 inch wrench, remove sensor retaining nut (H).

12. Using 5/16 inch wrench, install pipe plug into lower sensor (C) hole.

CAUTION

Be very careful not to disturb center filter element. The center filter element must be replaced if disturbed in any way.

Go on to Sheet 3

TA248348

FUEL-WATER SEPARATOR OPERATIONAL TESTS (Sheet 3 of 11)

Manual Drain Test (Sheet 2 of 2)

CAUTION

There is a gasket located between fuel-water separator cover and fuel-water seperator body. Each time cover is removed care must be taken not to disturb gasket.

13. If fluid level in fuel-water separator (A) is not above upper sensor (B) hole, using 7/16 inch socket, remove eight screws, lockwashers, and washers (J) securing cover (K) to separator (A).

14. Remove cover (K).

15. Add fuel to fuel-water separator (A) until fluid level is above upper sensor (B) hole.

16. Place cover (K) in position and, using 7/16 inch wrench, install eight screws, lockwashers, and washers (J).

17. Using 7/16 inch wrench, open bleed valve (L) by turning counterclockwise.

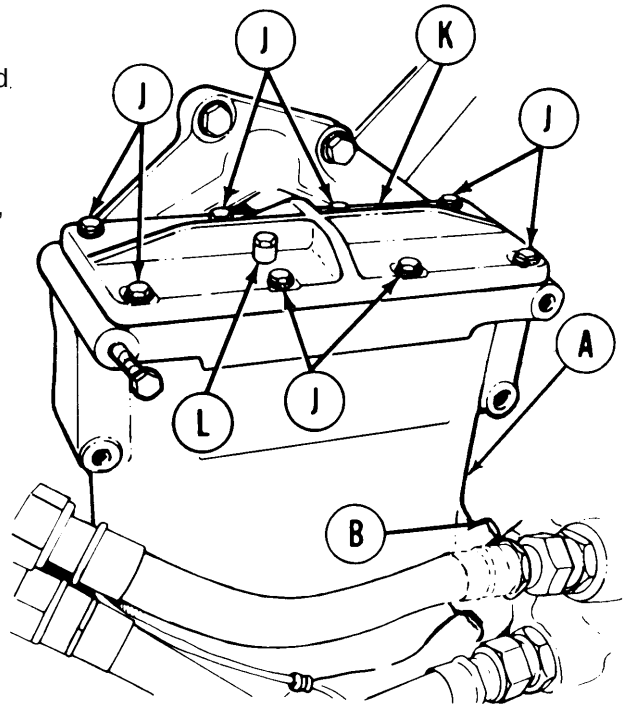

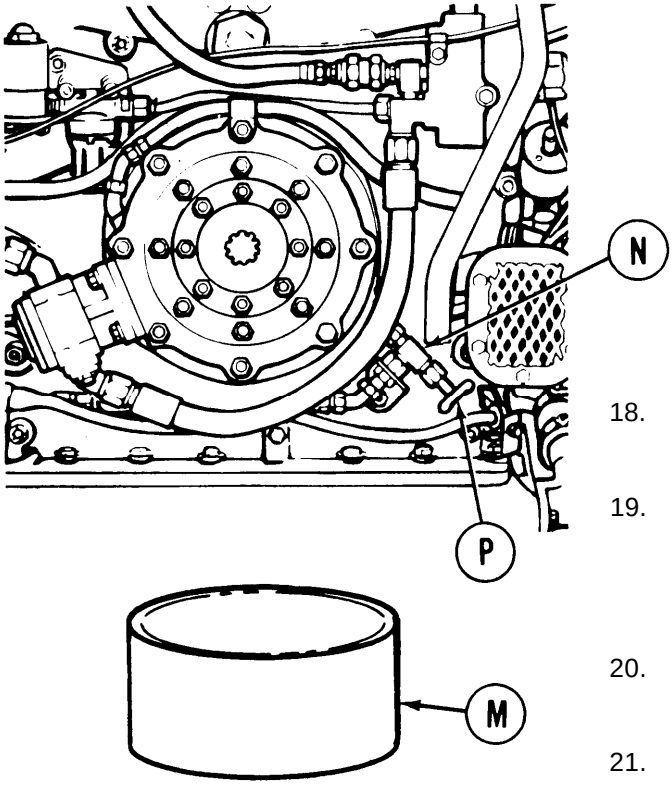

18. Place metal container (M) under outlet of manual drain valve (N).

19. Open manual drain valve (N) by turning valve handle (P) counterclockwise. Allow small amount of fluid to drain into metal container (M).

20. If fluid does not drain, refer to trouble-shooting sympton 10 (page 4-247).

21. If fluid does drain, close manual drain valve (N) and go on to automatic drain test on next page.

Go on to Sheet 4

TA248349

FUEL-WATER SEPARATOR OPERATIONAL TESTS (Sheet 4 of 11)

Automatic Drain Test (Sheet 1 of 2)

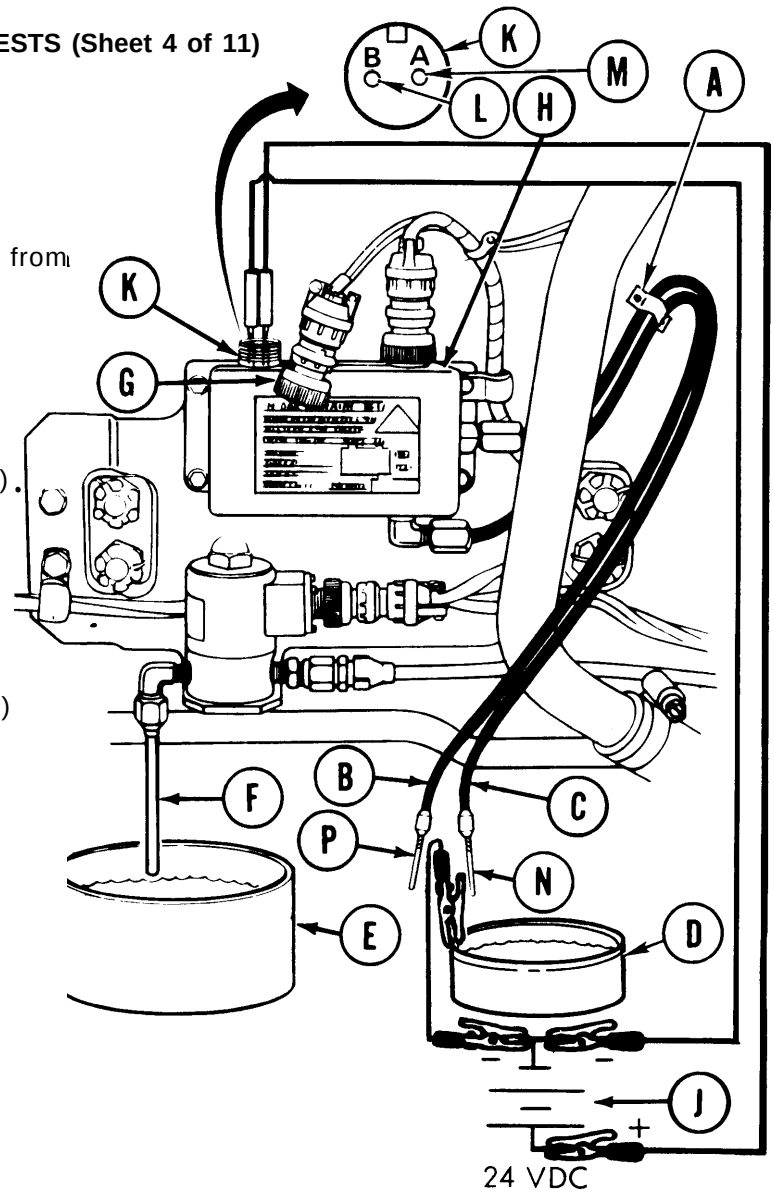

1. Using screwdriver, remove clamp (A) from sensor wires and position sensor wires (B) and (C) as shown in illustration.

2. Fill metal container (D) with water.

3. Place metal container (E) under drain line solenoid drain valve drain tube (F).

4. Using pliers, disconnect engine electrical harness connector (G) from fuel-water separator control box (H) by turning counterclockwise.

5. Connect jumper wire from negative (-) terminal of power source (J) to metal container (D).

NOTE

In order to perform steps 6 and 7, two leads, similar to multimeter leads with probe on one end and alligator clip on the other end, will be required.

It will be necessary to use two technicians each time these leads are used. The probes are touched to the pins in receptacle K and held in place with hands of second technician throughout these tests.

6. With one lead, connect negative (-) terminal of power source (J) to contact B (L) of fuel-water separator control box receptacle (K).

WARNING

Do not let probe at contact A (M) of fuel-water separator control box (H) touch side of receptacle (K). Do not let upper sensor (N) and lower sensor (B) come in contact with each other or with bottom or side of metal container (D). When moving sensors, do so by touching insulated wires (C and B). Do not touch (N) or (P) with hands.

7. With other lead, connect power contact A (M) at fuel-water separator control box (H) to positive (+) terminal of power source (J).

Go on to Sheet 5

TA248350

FUEL-WATER SEPARATOR OPERATIONAL TESTS (Sheet 5 of 11)

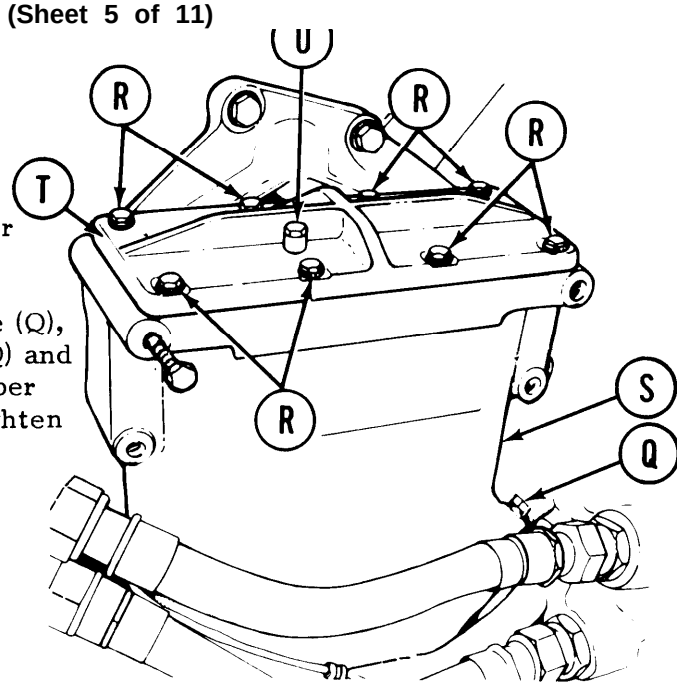

8. Using 5/16 inch wrench, loosen pipe plug in upper sensor hole enough to allow fuel to leak.

9. Check to see if fuel leaks from upper sensor hole (Q).

10. If fuel does not leak from upper sensor hole (Q), remove pipe plug from upper sensor hole (Q) and go on to step 11. If fuel does leak from upper sensor hole (Q), use 5/16 inch wrench to tighten pipe plug in upper sensor hole (Q) and go to step 15.

CAUTION

Be very careful not to disturb center filter element. Center filter element must be replaced if disturbed in any way.

11. Using 7/16 inch wrench, remove eight screws, lockwashers, and washers (R) securing cover to separator (S). Remove cover (T) from separator (S).

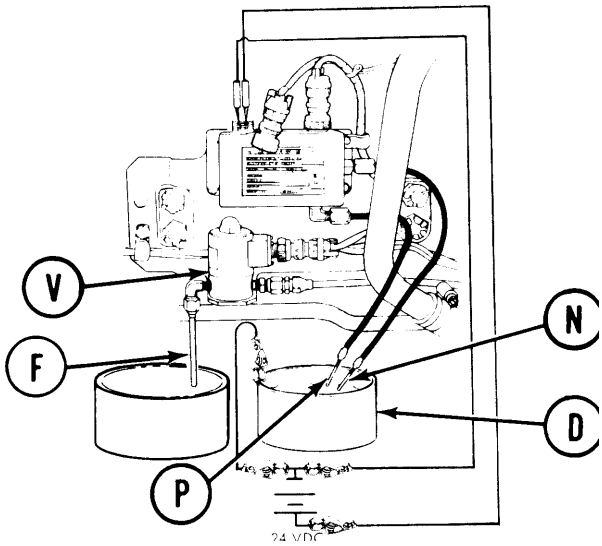

12. Add fuel to fuel-water separator (S) until fuel leaks from upper sensor hole (Q).

13. Using 5/16 inch wrench, install pipe plug into upper sensor hole (Q).

14. Place cover (T) in position and, using 7/16 inch wrench, install eight screws, lockwashers, and washers (R). Make sure bleed cap (U) is open (loose).

15. Hold tips of upper (N) and lower (P) sensors in water in metal container (D).

NOTE

Remove both upper (N) and lower (P) sensors from water in metal container (D) as soon as fluid begins draining from drain tube (F).

16. Listen for solenoid drain valve (V) to click and watch for fluid to begin draining from drain tube (F).

17. If fuel does not begin draining, refer to troubleshooting procedures (page 4-258).

18. If fuel does begin draining, go on to 15-second drain test on next page.

Go on to Sheet 6

TA24835

FuEL-WATER SEPARATOR OPERATIONAL TESTS (Sheet 6 of 11)

15-Second Drain Test (Sheet 1 of 2)

1. Using 1/2 inch wrench, close bleed valve (A).

2. Using adjustable wrench, remove pipe plug from upper sensor hole (B).

3. Check to see if fluid level is at top of upper sensor hole (8). If fluid level is at top, go to step 8, if not go to step 4.

CAUTION

Be very careful not to disturb center filter element. The center filter element must be replaced if disturbed in any way.

4. Using 5/16 inch wrench, install pipe plug into upper sensor hole (B).

5. Using 7/16 inch wrench, remove eight screws, lockwashers, and flat washers (C) securing cover (D) to separator (E). Remove cover (D) from separator (E).

6. Add fuel to fuel-water separator (E) until fluid level is above upper sensor hole (B).

7. Place cover (D) in position and, using 7/16 inch wrench, install eight screws, lockwashers, and flat washers (C).

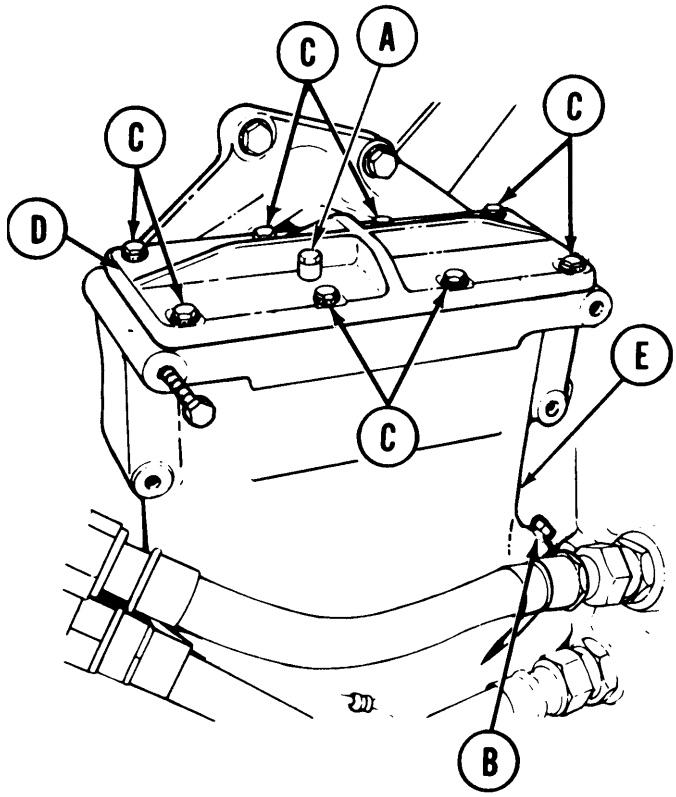

Go on to Sheet 7

TA248352

FUEL-WATER SEPARATOR OPERATIONAL TESTS (Sheet 7 of 11)

15-Second Drain Test (Sheet 2 of 2)

WARNING

Do not let probe at contact A (F) of fuel-water separator control box (G) touch sides of receptacle (H). Do not let upper sensor (J) and lower sensor (K) come in contact with each other or with bottom or sides of metal container (L). When moving sensors do so by touching insulated wires (M and N). Do not touch (J) or (K) with hands.

NOTE

Solenoid drain valve will automatically shut off after 18± 3 seconds. If it does not shut off, refer to troubleshooting procedures.

8. Hold tips of both upper (J) and lower (K) sensor in water in metal container (L) until fluid stops draining from solenoid drain valve drain tube (P).

9. If fluid does not stop draining from solenoid drain valve drain tube (P) within 18 ± seconds from starting, refer to troubleshooting procedures.

10. If fluid does stop draining, go to sequential drain test on next page.

11. Remove upper (J) and lower (K) sensors from metal container (L).

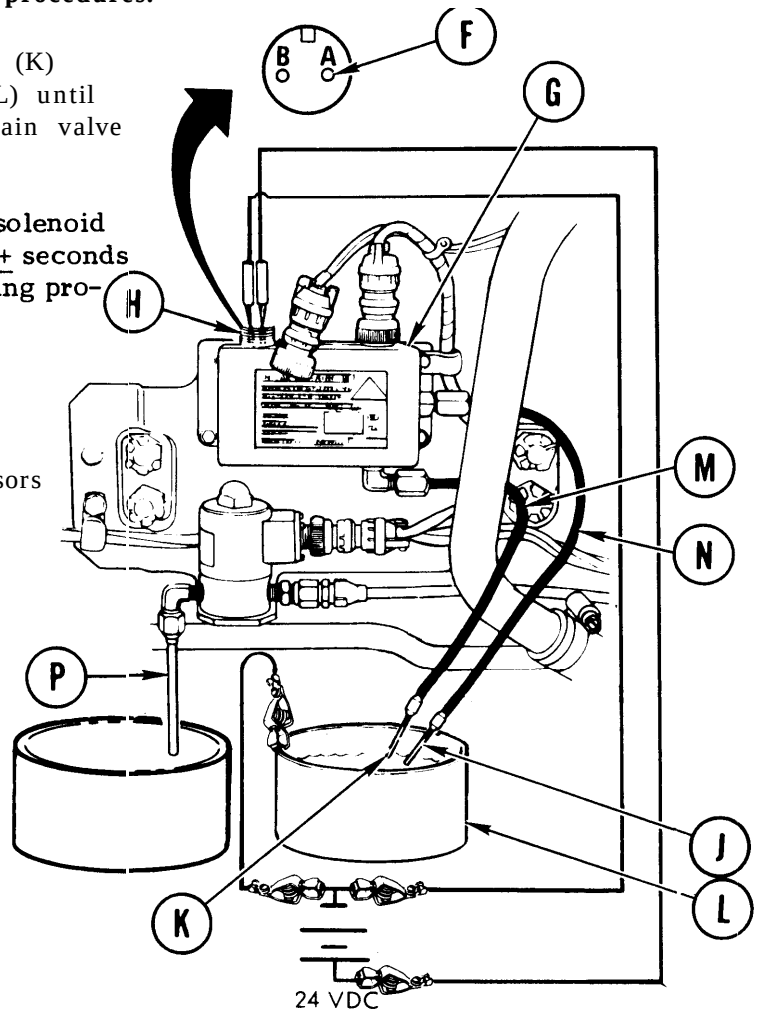

Go on to Sheet 8

TA248353

FUEL-WATER SEPARATOR OPERATIONAL TESTS (Sheet 8 of 11)

Sequential Drain Test (Sheet 1 of 4)

1. Using 5/16 inch wrench, remove pipe plug from upper sensor hole (A).

2. Check to see if fluid level is at top of upper sensor hole (A). If fluid level is at top, go to step 8. If not go to step 4.

3. Using 5/16 inch wrench, install pipe plug in upper sensor hole (A).

CAUTION

Be very careful not to disturb center filter element. The center filter element must be replaced if disturbed in any way.

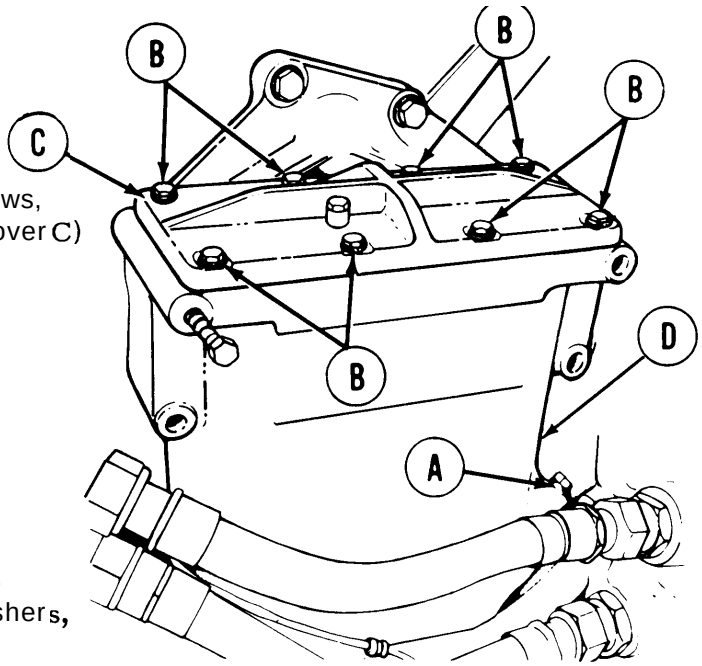

4. Using 7/16 inch socket, remove eight screws, lockwashers, and washers (B) securing cover (C) to separator (D). Remove cover (C) from separator (D).

5. Add fuel to fuel-water separator (D) until fluid level is above upper sensor hole (A).

6. Using 5/16 inch wrench, install pipe plug into upper sensor hole (A).

7. Place cover (C) in position and, using 7/16 inch wrench, install eight screws, lockwashers, and washers (B).

Go on to Sheet 9

TA248354

FUEL-WATER SEPARATOR OPERATIONAL TESTS (Sheet 9 of 11)

Sequential Drain Test (Sheet 2 of 4)

WARNING

Do not let probe at contact A (E) of fuel-water separator control box (F) touch sides of receptacle (G). Do not let upper sensor (H) and lower sensor (J) come in contact with each other or with bottom or sides of metal container (K). When moving sensors do so by touching insulated wires (L and M). Do not touch (H) or (J) with hands.

NOTE

Steps 8 through 11 must be performed within 18 ± 3 seconds.

8. Hold tip of lower sensor (J) in water in metal container (K).

9. Hold tip of upper sensor (H) in water in metal container (K) and check if fluid starts draining from solenoid drain valve drain tube (N).

10. Remove tip of upper sensor (H) from water in metal container (K) and check if fluid keeps draining from solenoid drain valve drain tube (N).

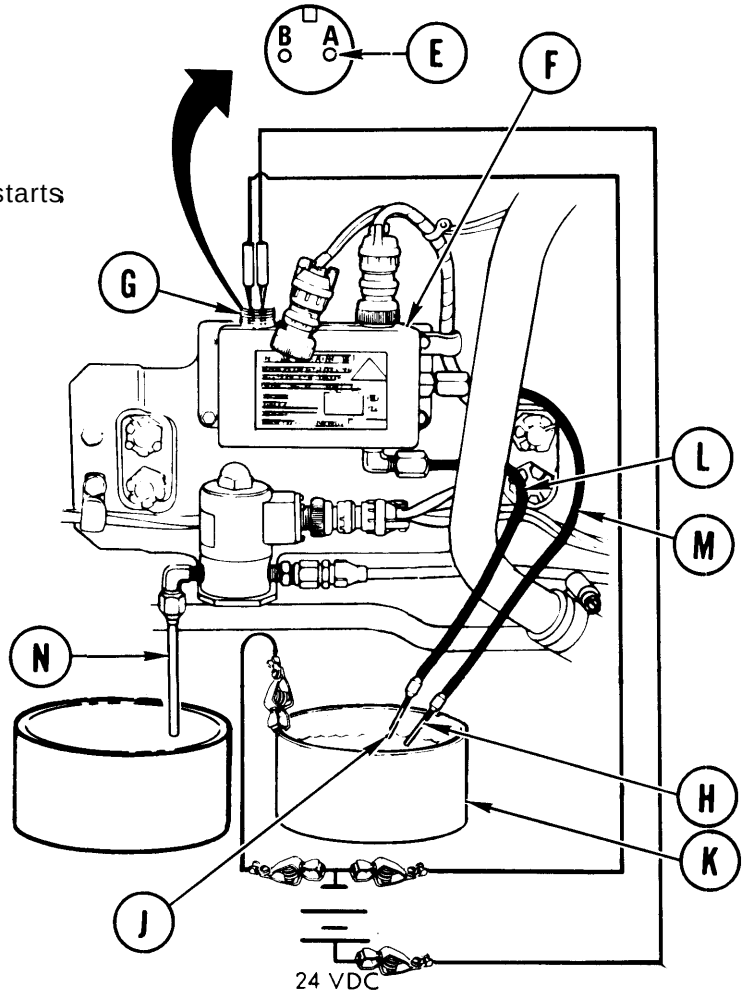

Go on to Sheet 10

TA248355

FUEL-WATER SEPARATOR OPERATIONAL TESTS (Sheet 10 of 11)

Sequential Drain Test (Sheet 3 of 4)

11. Remove tip of lower sensor (J) from water in metal container (K) before 18 ± 3 seconds have gone by from time of putting it in and check if fluid stops draining from solenoid drain valve drain tube (N).

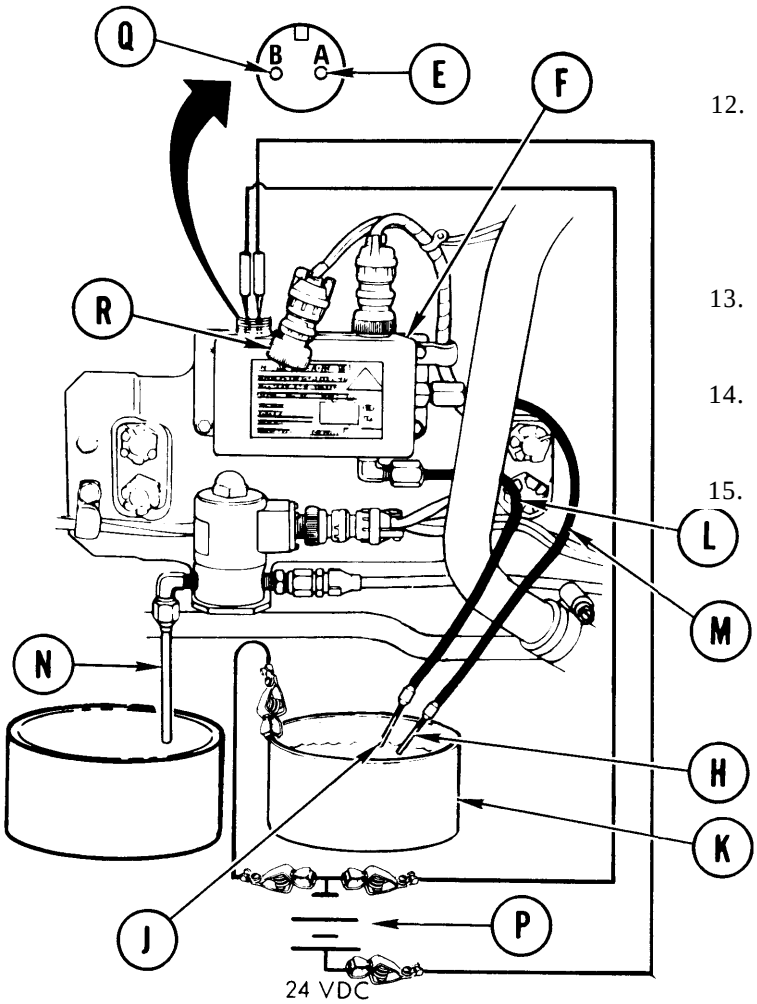

12. If fluid does not start draining (step 9), does not keep draining (step 10), or does not stop draining (step 11), refer to troubleshooting procedures (page 4-247).

13. Disconnect lead at contact A (E) and at positive (+) terminal of power source (P).

14. Disconnect lead at contact B (Q) and at negative (-) terminal of power source (P).

15. Disconnect jumper wire from metal container (K) and negative (-) terminal of power source (P).

16. Remove metal container (K) with water and fuel from under solenoid drain valve drain tube (N).

17. Using pliers, connect engine electrical harness connector (R) to fuel-water separator control box (F) by turning clockwise.

Go on to Sheet 11

TA248356

FUEL-WATER SEPARATOR OPERATIONAL TESTS (Sheet 11 of 11)

Sequential Drain Test (Sheet 4 of 4)

18. Using screwdriver, install clamp.

19. Using 5/16 inch wrench, remove two pipe plugs from upper (A) and lower (S) sensor holes.

20. Using 1/2 inch wrench, install sensor retaining nut (T).

21. Using 1/2 inch wrench to hold sensor retaining nut (T), use 9/16 inch wrench to install upper sensor (G) into fuel-water separator (D).

22. Using 5/16 inch wrench, remove pipe plug from lower sensor hole (S).

23. Using 1/2 inch wrench, install sensor retaining nut (U).

24. Using 1/2 inch wrench to hold sensor retaining nut (T), use 9/16 inch wrench to install lower sensor (J) into fuel-water separator (D).

25. Using 1/2 inch socket, close bleed cap (V) until snug by turning clockwise.

26. Position clamp (W) onto fuel-water separator and, using 1/2 inch socket, install three capscrews, lockwashers, and washers (X).

27. Using 1/2 inch socket and extension, tighten capscrew (Y).

28. Install powerplant (page 5-14).

29. Perform fuel system bleeding procedure (page 7-63).

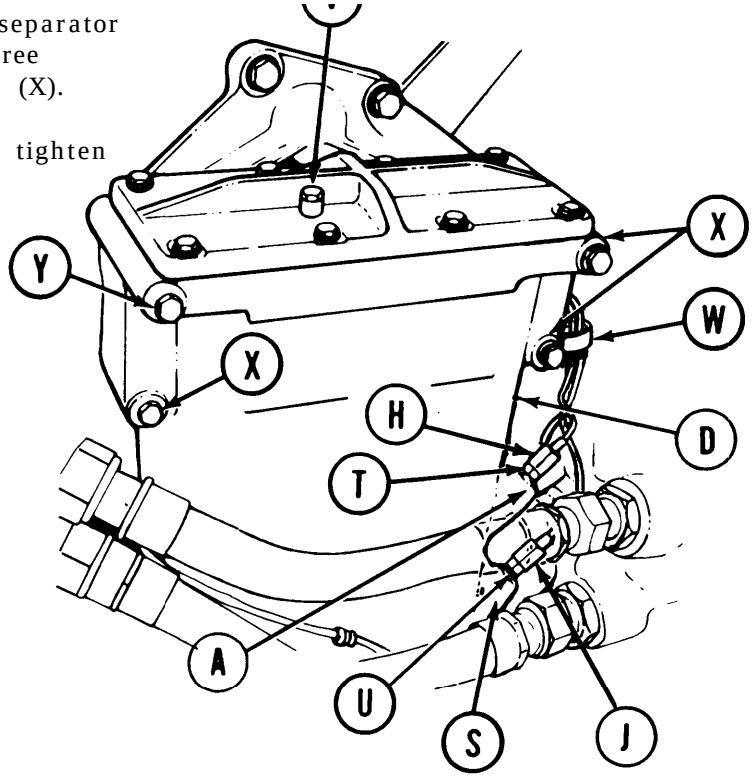

End of Task

ENGINE FUEL RETURN TUBE REPLACEMENT (Sheet 1 of 2)

TOOLS: 7/16 in. combination box and open end wrench
1 in. open end wrench
1-1/8 in. open end wrench

SUPPLIES: Sealing compound (Item 24, Appendix D)
Lockwashers

REFERENCE: TM 5-5420-202-10

PRELIMINARY PROCEDURES: Remove powerplant (page 5-2)
Drain left fuel tank (page 7-184)

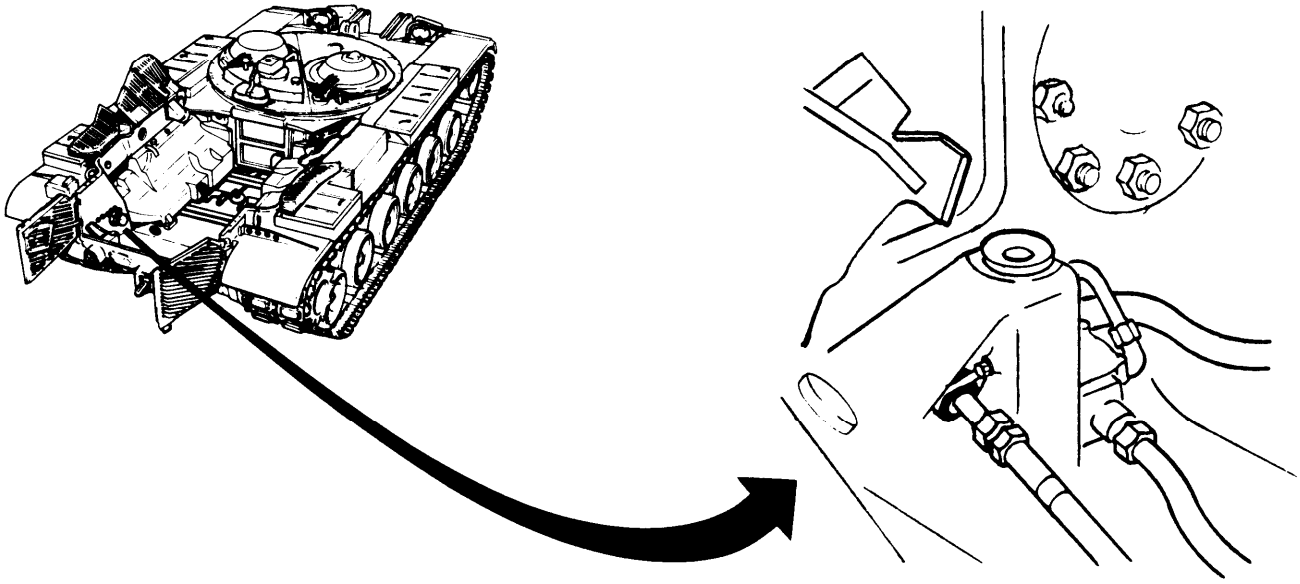

NOTE

Use suitable container to catch fuel spillage whenever any fuel line or fitting is loosened or removed. Use cloth to wipe any spillage. Discard cloth and drained fuel in accordance with local procedures.

Go on to Sheet 2

TA248358

ENGINE FUEL RETURN TUBE REPLACEMENT (Sheet 2 of 2)

REMOVAL:

1. Using 1-1/8 inch wrench, loosen tube fitting (A).

2. Using 1-1/8 inch wrench on tube fitting (B) and 1 inch wrench on hose fitting (C), loosen tube fitting (B) from hose fitting (C).

3* Using 7/16 inch wrench, remove screw and lockwasher (D) from clamp (E). Remove clamp (E) from tube (B).

4. Remove tube (B) from vehicle.

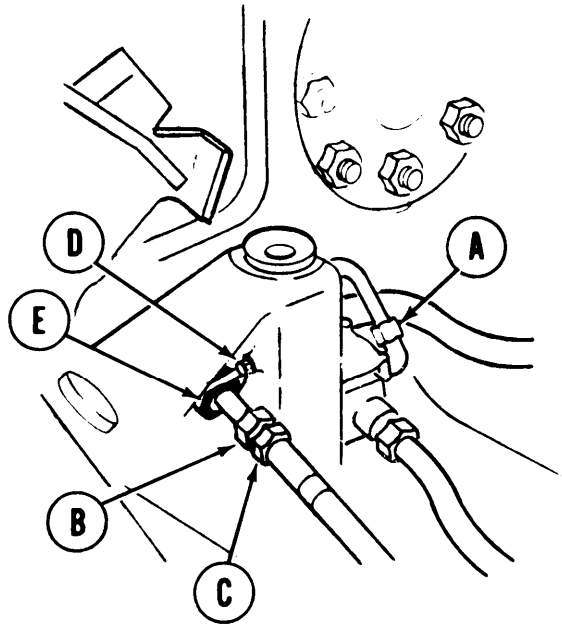

INSTALLATION :

1. Lightly coat tube assembly connections (A) and (B) with sealing compound.

2. Using 1-1/8 inch wrench on tube fitting (C) and 1 inch wrench on hose fitting (B), install tube assembly (C) to hose (B).

3. Using 1-1/8 inch wrench on tube fitting (A), install tube fitting (A) to selector cock (D).

4. Using 7/16 inch wrench, install clamp (E) and screw and lockwasher (F).

5. Fill fuel tanks (TM 5-5420-202-10).

6. Install powerplant (page 5-14).

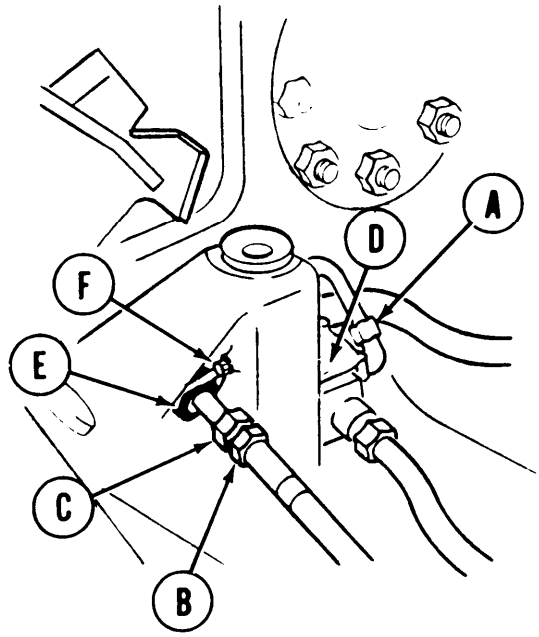

End of Task

TA248359

MAIN FUEL FEED HOSE REPLACEMENT (Sheet 1 of 2)

TOOLS: 1/2 in. combination box and open end wrench (2 required)
7/8 in. combination box and open end wrench
1 in. combination box and open end wrench (2 required)
1-1/4 in. open end wrench

SUPPLIES: Lockwashers

REFERENCE: TM 5-5420-202-10

PRELIMINARY PROCEDURE: Open left top deck grille doors (TM 5-5420-202-10)

REMOVAL:

1. Using two 1 inch wrenches, disconnect main fuel feed hose (A) from tube assembly (B).

2. Using 1-1/4 inch wrench on quick-disconnect (C) and 7/8 inch wrench on main fuel feed hose fitting (D), remove hose from quick-disconnect.

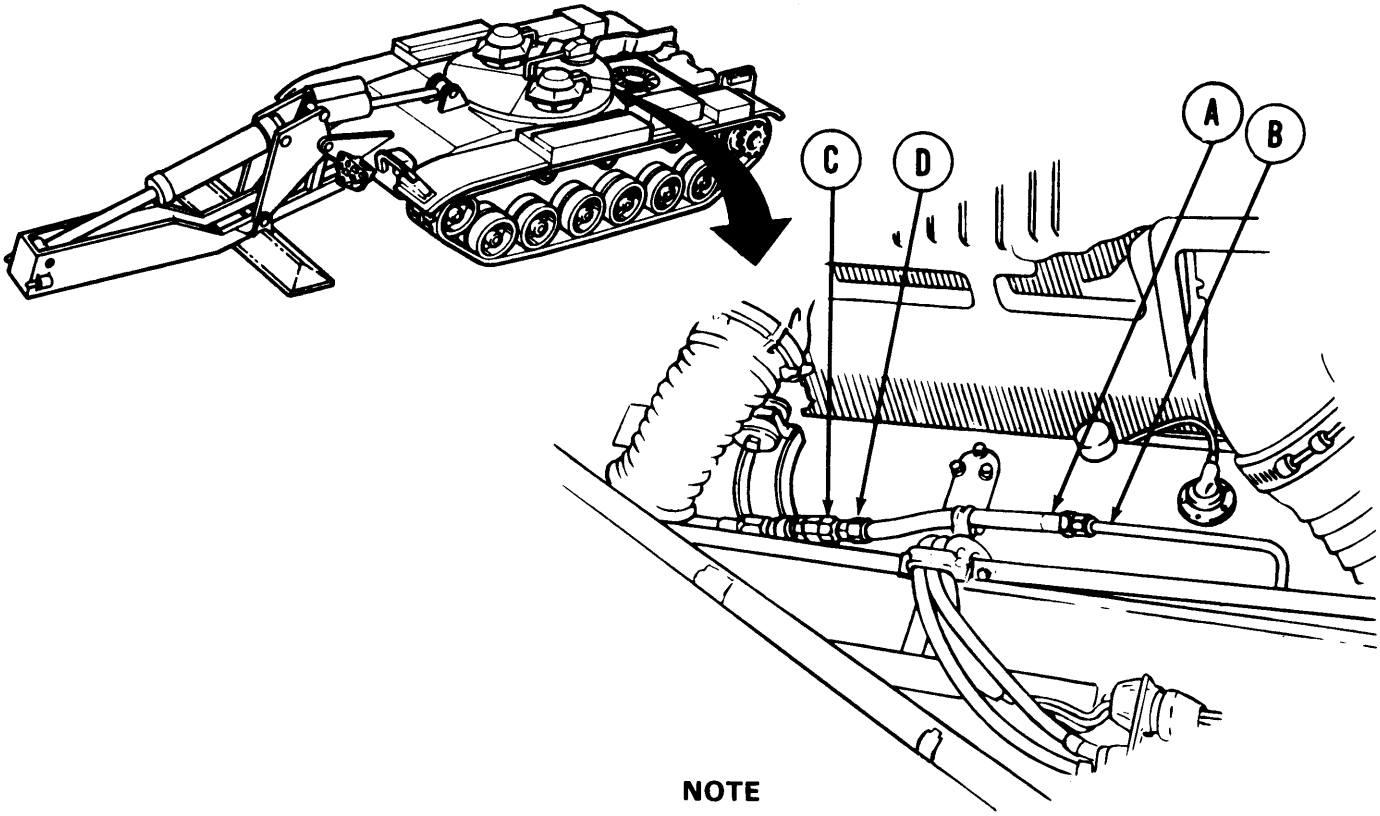

NOTE

Use suitable container to catch fuel spillage whenever any fuel line or fitting is loosened or removed. Use cloth to wipe any spillage. Discard cloth and drained fuel in accordance with local procedures.

Go on to Sheet 2

TA248360

MAIN FUEL FEED HOSE REPLACEMENT (Sheet 2 of 2)

3. Using two 1/2 inch wrenches, remove screw (E), flat washer (F), lockwasher (G), and nut (H) holding clamp (J) and hose (A) to fuel tank bracket (K).

4. Remove hose (A) and clamp (J).

5. Remove clamp (J) from hose (A).

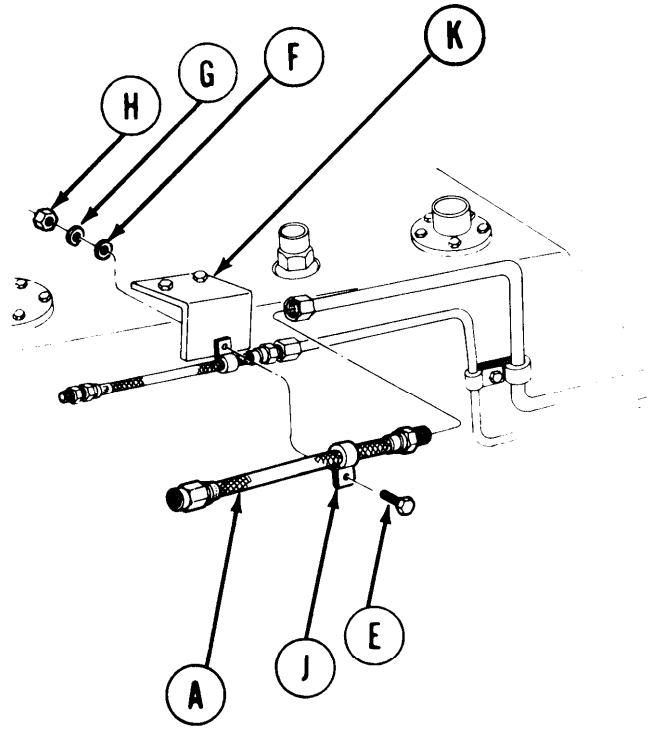

INSPECTION:

1. Inspect threaded components for thread damage.

2. Replace or repair if defective.

INSTALLATION:

1. Install clamp (A) on main fuel feed hose (B).

2. Using two 1 inch wrenches, install hose (B) to tube assembly (C).

3* Install main fuel feed hose (B) to quick-disconnect (D) by using 1-1/4 inch wrench and 7/8 inch wrench.

4. Using two 1/2 inch wrenches, secure clamps (A) and (E) to fuel tank bracket with screw (F), flat washer (G), lockwasher (H), and nut (J).

5. Close left top deck grille doors (TM 5-5420-202-10).

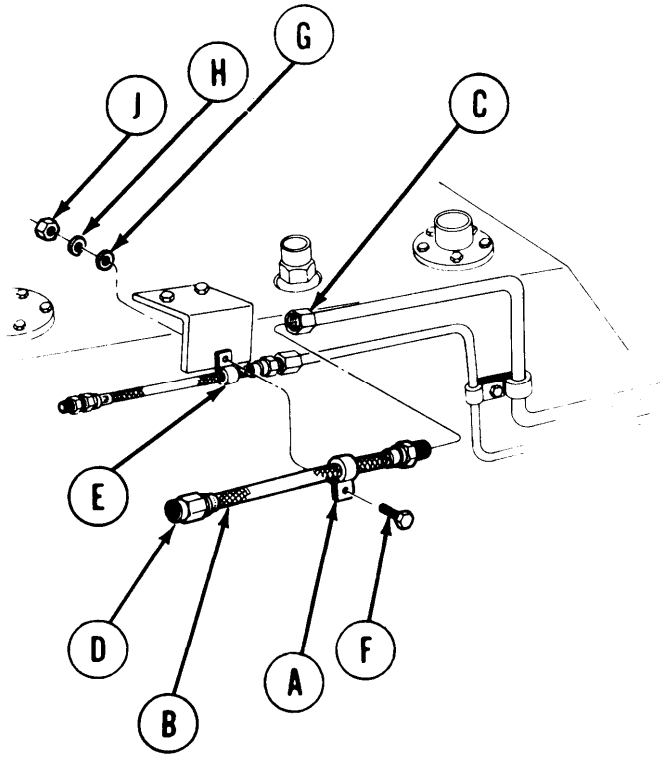

End of Task

TA248361

INTER-TANK SWING CHECK VALVE REPLACEMENT (Sheet 1 of 5)

PROCEDURE INDEX

PROCEDURE	PAGE
Removal	7-238
Inspection	7-240
Installation	7-240

TOOLS: 9/16 in. combination box and open end wrench
7/8 in. combination box and open end wrench
1 in. combination box and open end wrench
1-1/16 in. combination box and open end wrench
1-1/8 in. open end wrench
7/16 in. socket with 1/2 in. drive
9/16 in. socket with 1/2 in. drive
Automotive wrench
Ratchet with 1/2in. drive
Vise

REFERENCE: TM 5-5420-202-10

PRELIMINARY PROCEDURES: Remove powerplant (page 5-2)
Drain fuel tanks (page 7-184)

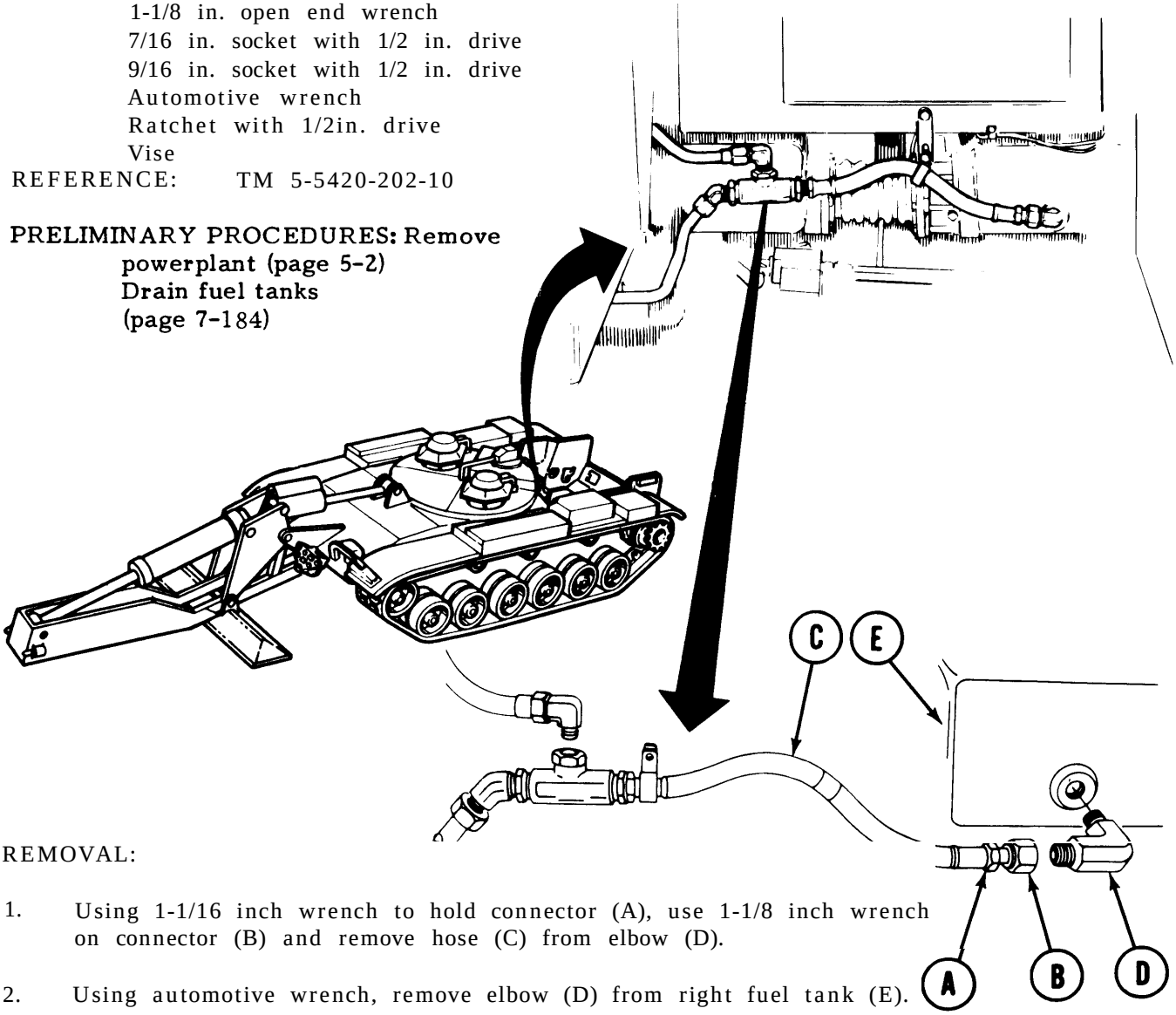

REMOVAL:

1. Using 1-1/16 inch wrench to hold connector (A), use 1-1/8 inch wrench on connector (B) and remove hose (C) from elbow (D).

2. Using automotive wrench, remove elbow (D) from right fuel tank (E).

Go onto Sheet 2

TA248362

INTER-TANK SWING CHECK VALVE REPLACEMENT (Sheet 2 of 5) - Continued

3. Using 9/16 inch socket and 9/16 inch wrench, remove screw (F) and nut and washer (G) holding clamp (H) to bracket (J).

4. Remove clamp (H) from hose (C).

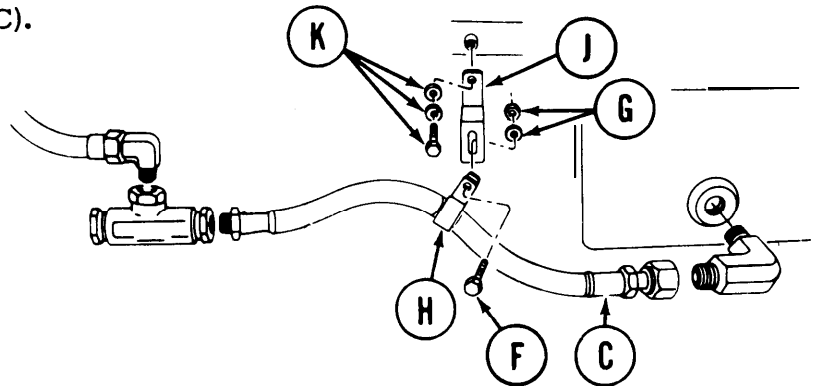

5. Using 9/16 inch socket, remove screw and washers (K) holding bracket (J) to hull.

6. Remove bracket (J).

7. Using 1 inch wrench on fuel hose (L) and 7/8 inch wrench on elbow (M), remove fuel line (L) from elbow (M).

8. Using 7/16 inch socket, remove screw and washers (N) holding clamp (P) to fuel line.

9. Remove clamp (P) from fuel line (L).

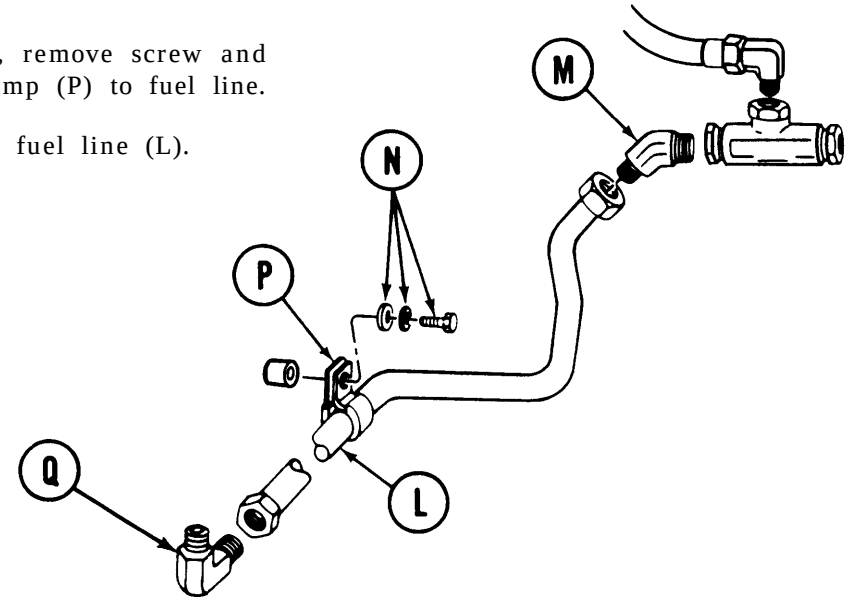

10. Using 1 inch wrench on fuel line (L) and 7/8 inch wrench on elbow (Q), remove fuel line (L) from elbow (Q) (located behind left fuel tank rear mount).

11. Remove fuel line (L).

12. Using 7/8 inch open end wrench, remove elbow (Q) from left fuel tank.

TA248363

INTER-TANK SWING CHECK VALVE REPLACEMENT (Sheet 3 of 5) - Continued

13. Using 1-1/16 inch wrench on fuel line (R) and 7/8 inch wrench on elbow (S), remove fuel line (R) from elbow (S).

14. Remove check valve (T) and hose (C) from vehicle and clamp check valve (T) in a vise.

15. Using 1-1/16 inch wrench, remove hose (C) from check valve (T).

16. Using 7/8 inch wrench, remove elbow (M) and elbow (S) from check valve (T).

17. Remove check valve (T) from vise.

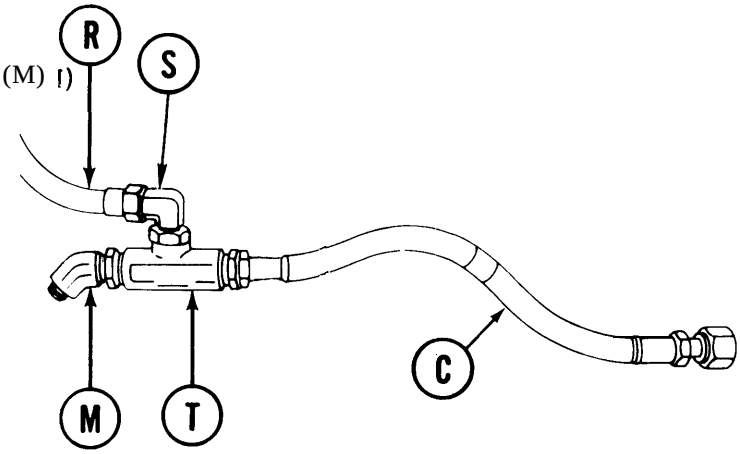

INSPECTION:

Inspect threaded parts for bad threads. Check tubing for cracks or bends. Replace defective parts.

INSTALLATION:

1. Using 7/8 inch wrench, install elbow (A) to left fuel tank.

2. Using 1 inch wrench, install fuel line (B) to elbow (A).

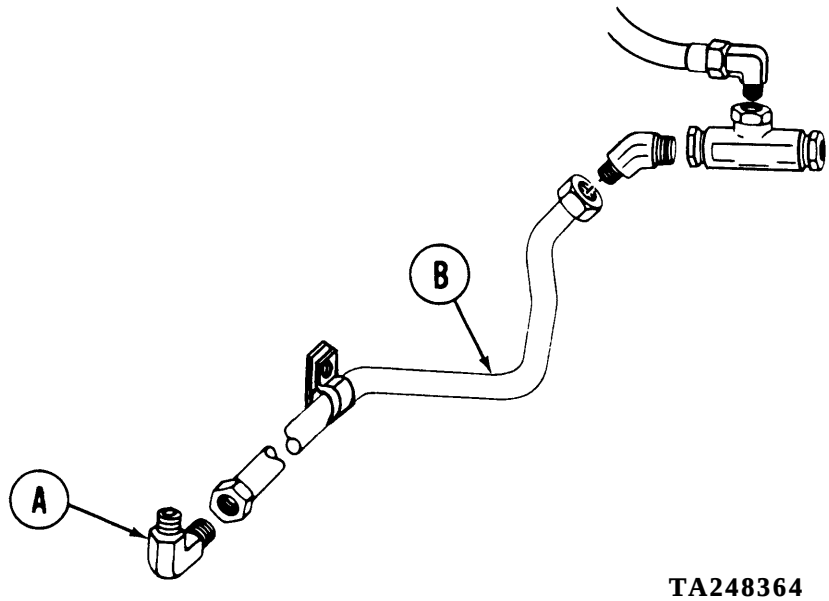

Go on to Sheet 4

TA248364

INTER-TANK SWING CHECK VALVE REPLACEMENT (Sheet 4 of 5) - Continued

3. Install clamp (C)to fuel line (B).

4. Using 7/16 inch socket, install screw, washers, and lockwashers (D) to secure clamp (C) to hull.

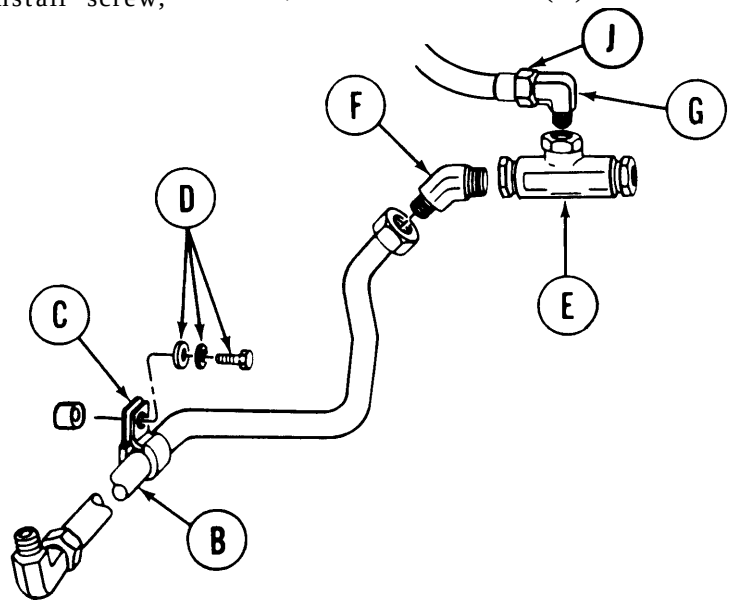

5. Clamp check valve (E) in a vise.

6. Using 7/8 inch wrench, install elbow (F) and elbow (G) in check valve (E).

7. Using 1-1/16 inch wrench, attach hose (H) to check valve (E).

8. Remove check valve (E) and hose (H) from vise and position in vehicle.

9. Using 7/8 inch wrench on elbow (F) and 1 inch wrench on fuel line (B) install fuel line (B) to elbow (F).

10. Using 7/8 inch wrench on elbow (G) and 1-1/16 inch wrench on fuel line (J), install fuel line (J) to elbow (G).

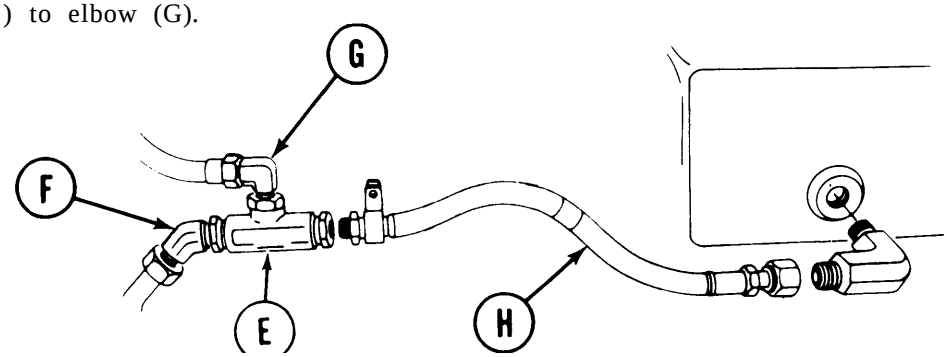

Go on to Sheet 5

TA248365

INTER-TANK SWING CHECK VALVE REPLACEMENT (Sheet 5 of 5) - Continued

11. Using 7/8 inch wrench, install elbow (K) to right fuel tank.

12. Using 7/8 inch wrench to hold connector (L) and 1-1/8 inch wrench on connector (M), install fuel line (H) to elbow (K).

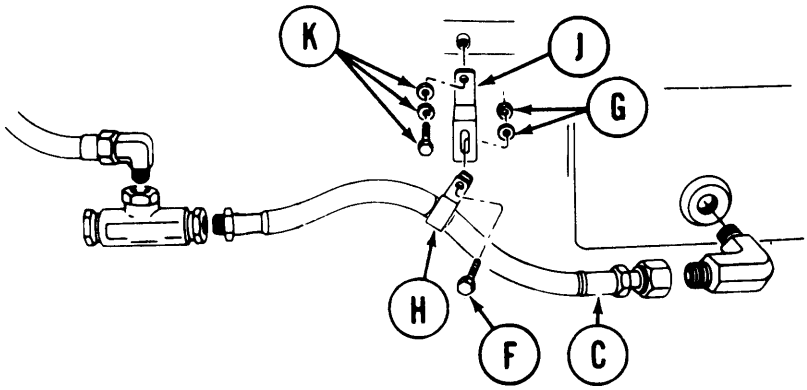

13. Using 9/1 6 inch socket, install bracket (N) to hull using screw, washers, and lockwashers (P).

14. Install clamp (Q) to hose (H).

150 Using 9/16 inch socket on screw (R) and 9/16 inch wrench on nut and washer (S), install screw (R) and nut (S) through clamp (Q) and bracket (N).

16. Tighten screw (R) and nut and washer (S).

17. Install powerplant (page 5-14).

18. Fill fuel tanks (TM 5-5420-202-10.

End of Task

TA248366

FUEL INLET FLUID PRESSURE FILTER REPAIR (Sheet 1 of 2)

TOOLS: 10 in. adjustable wrench

SUPPLIES: Dry cleaning solvent (Item 55, Appendix D)
Gloves (Item 69, Appendix D)
Goggles (Item 70, Appendix D)

PRELIMINARY PROCEDURE: Remove fuel inlet filter from vehicle (page 7-243)

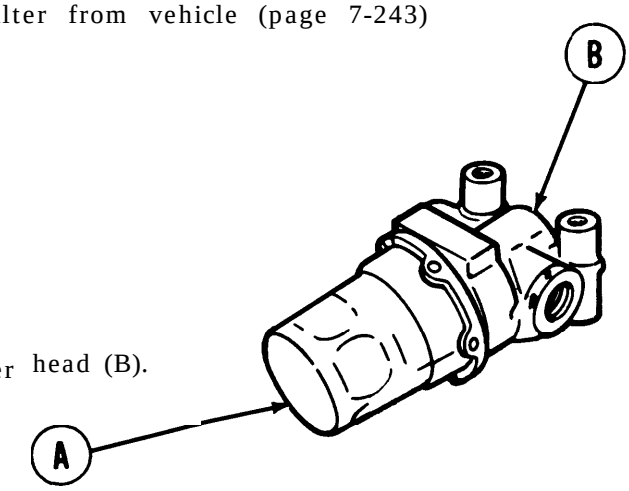

DISASSEMBLY:

1. Using wrench, remove filter bowl (A) from filter head (B).

2. Remove filter element (C) from filter head (B).

3. Remove preformed packing (D) from filter bowl (A).

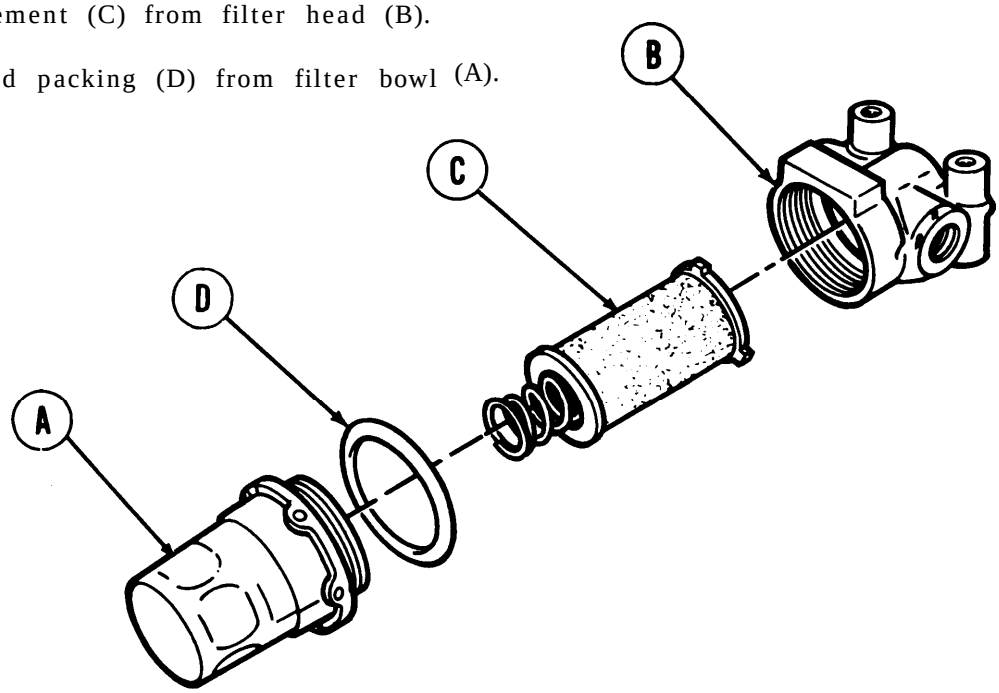

Go on to Sheet 2

TA248367

FUEL INLET FLUID PRESSURE FILTER REPAIR (Sheet 2 of 2)

CLEANING AND INSPECTION:

1. Inspect for broken or cracked components. Replace as necessary.

WARNING

Dry cleaning solvent P-D-680 is toxic and flammable. To prevent personal injury, wear protective goggles and gloves and use only in a well-ventilated area. Avoid contact with skin eye, and clothes and don't breathe vapors. Do not use near open flame or excessive heat. The flash point for Type #1 Dry Cleaning Solvent is 100°F (38°C) and for Type # 2 is 138°(50°C). If you become dizzy while using cleaning solvent, get fresh air immediately and get medical aid. If contact with eyes is made, wash your eyes with water and get medical aid immediately.

2. Clean filter bowl, element, and spring with dry cleaning solvent and cloth.

WARNING

Compressed air used for cleaning purposes will not exceed 30 psi. Use only with effective chip guarding and personnel protective equipment goggles/shield, gloves, etc).

3. Blow low-pressure, compressed air through filter element to remove dirt particles. Replace element if damaged.

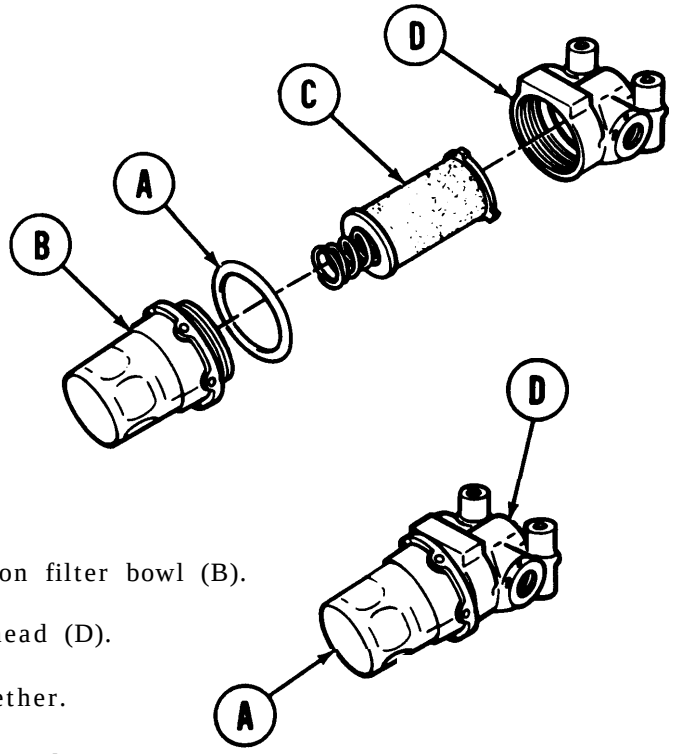

ASSEMBLY:

1. Place new preformed packing (A) in position on filter bowl (B).
2. Place filter element and spring (C) in filter head (D).
3. Place filter bowl (B) and filter head (D) together.
4. Using wrench, screw together filter bowl (B) and filter head (D).
5. Install fuel filter (page 7-248).

End of Task

TA248368

MANIFOLD HEATER FUEL FILTER AND INPUT FUEL LINE REPLACEMENT (Sheet 1 of 8)

PROCEDURE INDEX

PROCEDURE	PAGE
Fuel Filter Replacement	7-245
Fuel Filter Element Replacement	7-250
Fuel Filter Input Line Replacement	7-252

Fuel Filter Replacement (Sheet 1 of 5)

PROCEDURE INDEX

PROCEDURE	PAGE
Removal	7-245
Installation	7-248

TOOLS: Flat-tip screwdriver
5/16 in. combination box and open end wrench
7/16 in. combination box and open end wrench
1/2 in. combination box and open end wrench
5/8 in. combination box and open end wrench

SUPPLIES: Sealing compound (Item 28, Appendix D)
Drain pan
Lockwashers

REFERENCE: TM 5-5420-202-10

PRELIMINARY PROCEDURE: Remove engine compartment **access** covers (pages 17-11 and 17-13)

REMOVAL:

CAUTION

When removing or installing fuel lines, care must be taken not to damage fittings and threads or twist or distort fuel lines or hoses.

Go on to Sheet 2

MANIFOLD HEATER FUEL FILTER AND INPUT FUEL LINE REPLACEMENT (Sheet 2 of 8)
Fuel Filter Replacement (Sheet 2 of 5)

NOTE

Use a suitable container to catch any fuel that may leak out whenever any part of the fuel system is loosened or disconnected.

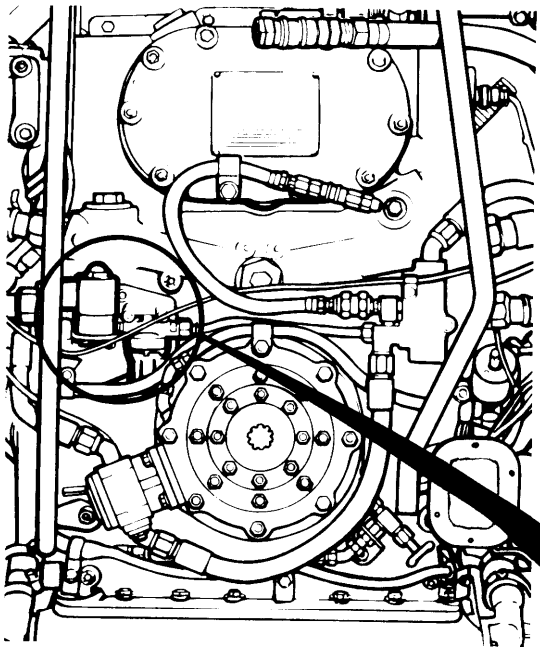

REMOVAL:

1. Disconnect electriical lead (A) from solenoid valve (B).
2. Using 7/16 inch and 1/2 inch open end wrench, remove fuel lines (C) from tee (D).
3. Using 1/2 inch and 5/8 inch open end wrench, remove fuel line (E) from adapter (F).

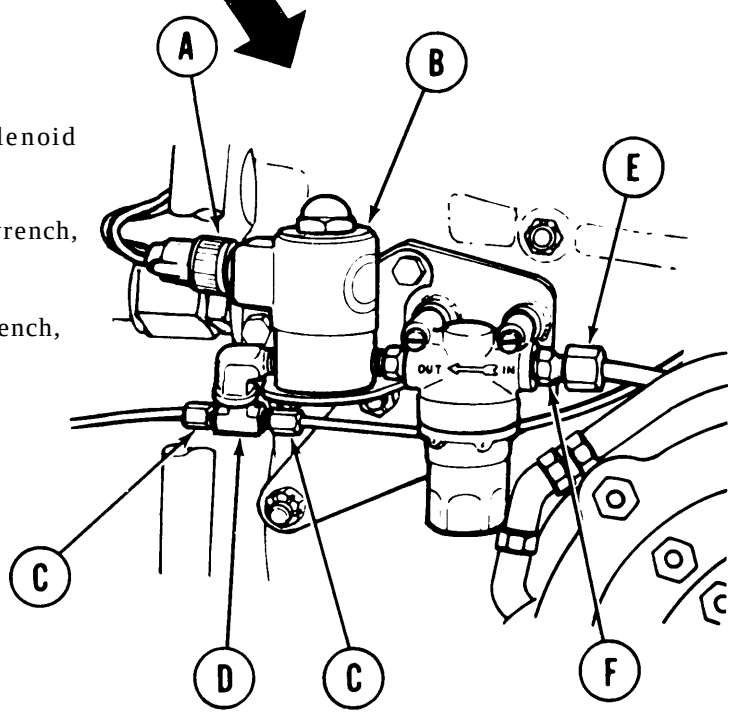

Go on to Sheet 3

TA248370

MANIFOLD HEATER FUEL FILTER AND INPUT FUEL LINE REPLACEMENT (Sheet 3 of 8)
Fuel Filter Replacement (Sheet 3 of 5)

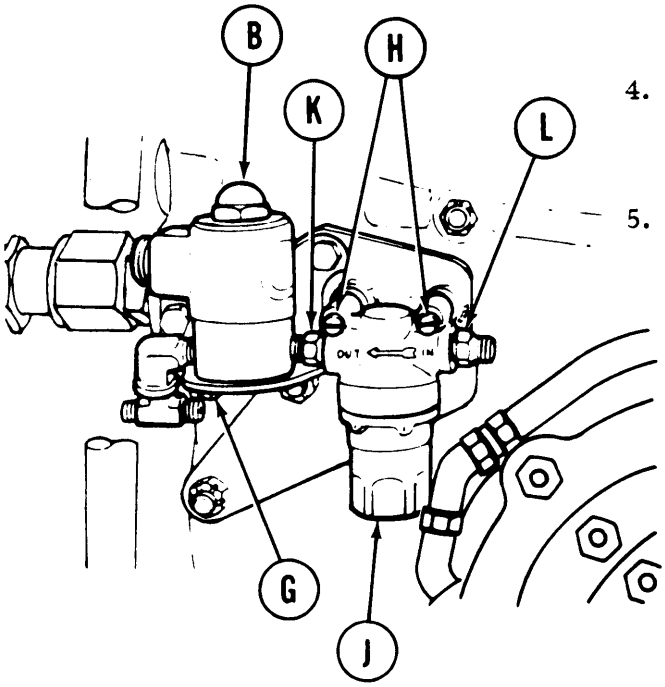

4. Using 5/16 inch open end wrench, remove two bolts and washers (G) securing solenoid valve (B) to bracket.

5. Using screwdriver, remove two screws, lock-washers, and flat washers (H) securing fuel filter (J) to bracket.

6. Remove solenoid valve (B), fuel filter (J), and attached fittings as a unit.

NOTE

It may be necessary to place fuel filter in a vise.

7. Using 7/16 inch open end wrench, hold nipple (K) and remove fuel filter (J) from nipple.

8. Using 1/2 inch open end wrench, remove adapter (L) from fuel filter (J).

9. Inspect hoses, tube assemblies, and fittings for cracks and other damage.

Go on to Sheet 4

TA248371

MANIFOLD HEATER FUEL FILTER AND INPUT FUEL LINE REPLACEMENT (Sheet 4 of 8)
Fuel Filter Replacement (Sheet 4 of 5)

INSTALLATION:

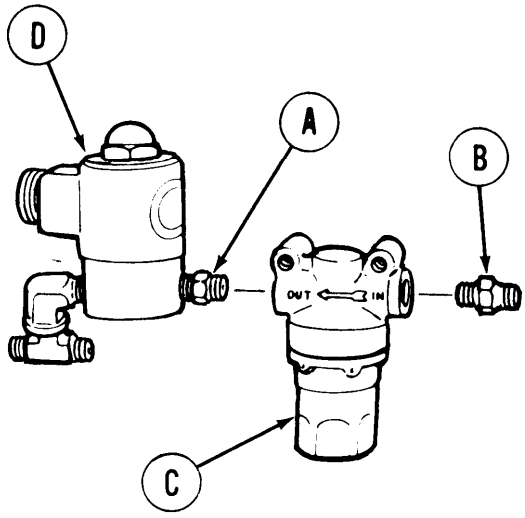

1. Coat threads of nipple (A) and adapter. (B) with sealing compound.

2. Using 1/2 inch open end wrench, install and secure adapter (B) to input port of fuel filter (C).

3. Using 7/16 inch open end wrench, hold nipple (A) and install fuel filter (C) securely onto nipple (A).

4. Aline fuel filter (C) and solenoid valve (D) as shown on illustration.

5. Position solenoid valve (D) and fuel filter (C) with attached fittings to brackets on engine.

6. Using screwdriver, secure fuel filter (C) to bracket with two screws, lockwashers, and flat washers (E).

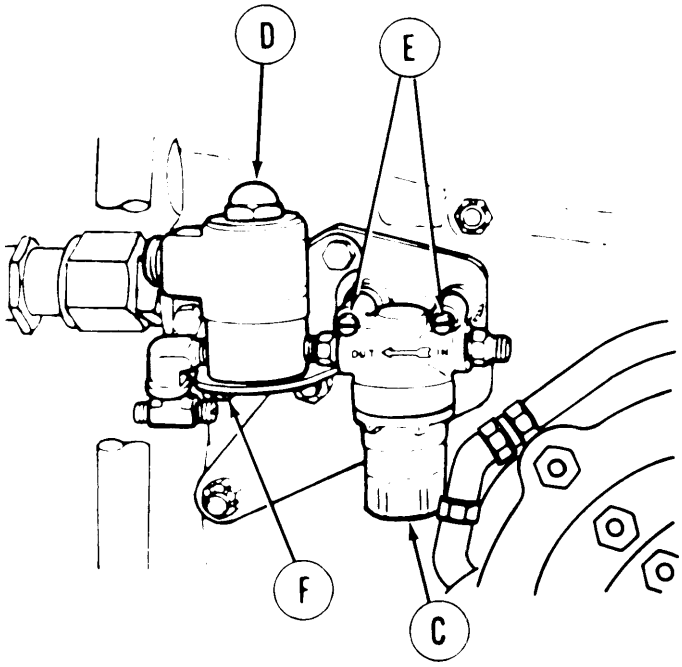

7. Using 5/16 inch. open end wrench, secure solenoid valve (D) to bracket with two bolts and washers (F).

Go on to Sheet 5

TA248372

MANIFOLD HEATER FUEL FILTER AND INPUT FUEL LINE REPLACEMENT (Sheet 5 of 8)
Fuel Filter Replacement (Sheet 5 of 5)

8. Connect two fuel lines (G) to tee (H). Using 7/16 inch wrench, tighten fuel line nuts.

9. Connect tube assembly (J) to adapter (B). Using 1/2 inch and 5/8 inch open end wrenchs, tighten tube nut to adapter.

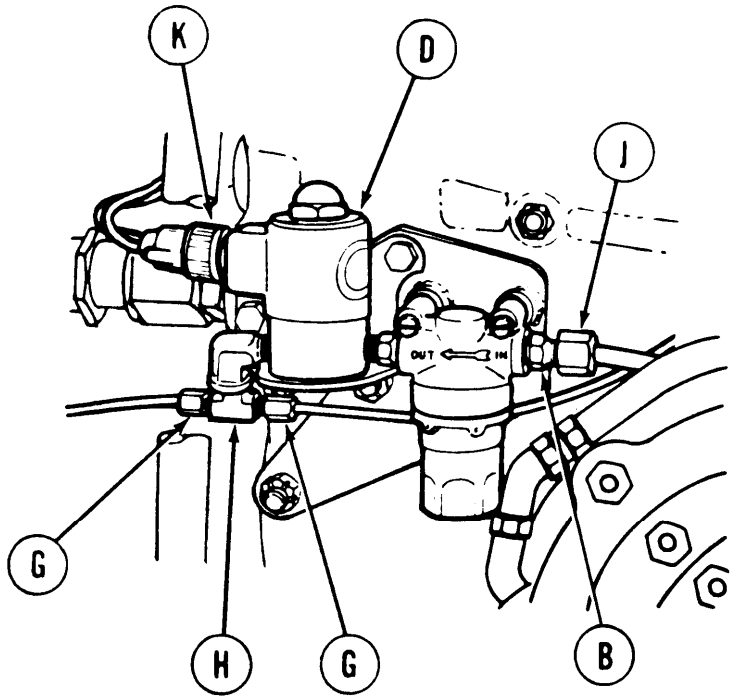

10. Connect electrical lead (K) to solenoid valve (D).

11. Operate purge pump (TM 5-5420-202-10) and check for fuel leaks. If leaks are found, tighten connections as required.

12. Install engine access covers (pages 17-12 and 17-14).

End of Task

TA248373

MANIFOLD HEATER FUEL FILTER AND INPUT FUEL LINE REPLACEMENT (Sheet 6 of 8)
Fuel Filter Element Replacement (Sheet 1 of 2)

TOOLS: Adjustable wrench

SUPPLIES: Dry cleaning solvent (Item 55, Appendix D)
Low-pressure compressed air
Rage (Item 12, Appendix D)

REFERENCE: TM 5-5420-202-10

PRELIMINARY PROCEDURE: Remove engine compartment access covers (pages 17-11 and 17-13)

REMOVAL:

NOTE

Use a suitable container to catch any fuel that may leak out , when bowl is removed.

1. Using adjustable wrench, loosen filter bowl (A).

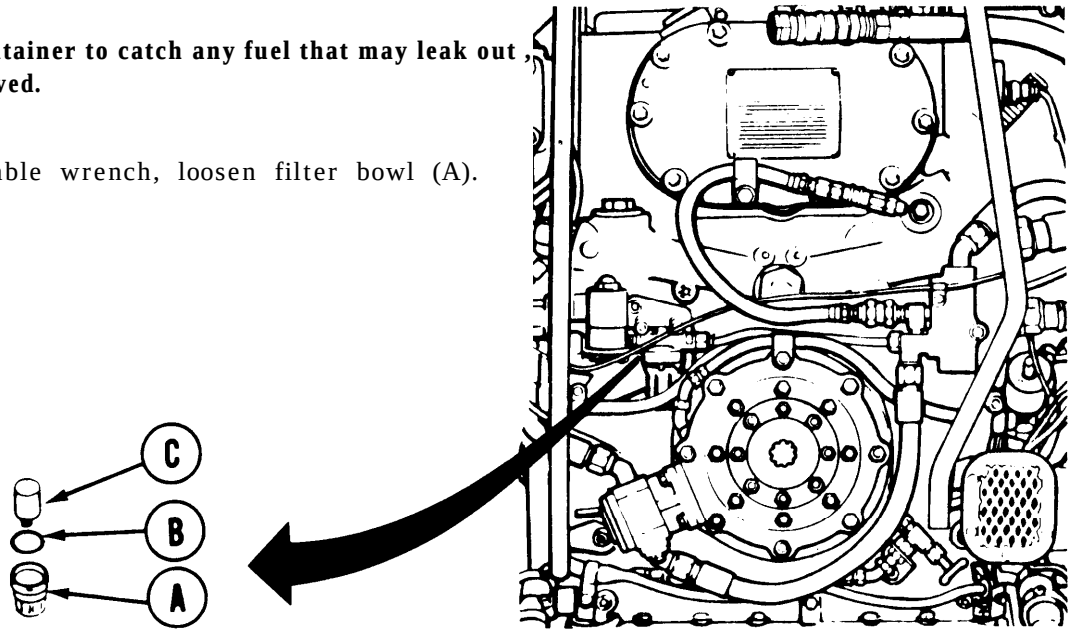

2. Remove bowl (A), preformed packing (B), and filter element (C).

3. Throw away preformed packing (B) and filter element (C).

4. Clean filter bowl with dry cleaning solvent.

Go on to Sheet 2

TA248374

MANIFOLD HEATER FUEL FILTER AND INPUT FUEL LINE REPLACEMENT (Sheet 7 of 8)
Fuel Filter Element Replacement (Sheet 2 of 2)

5. Wipe out bowl (A) and dry with compressed air.

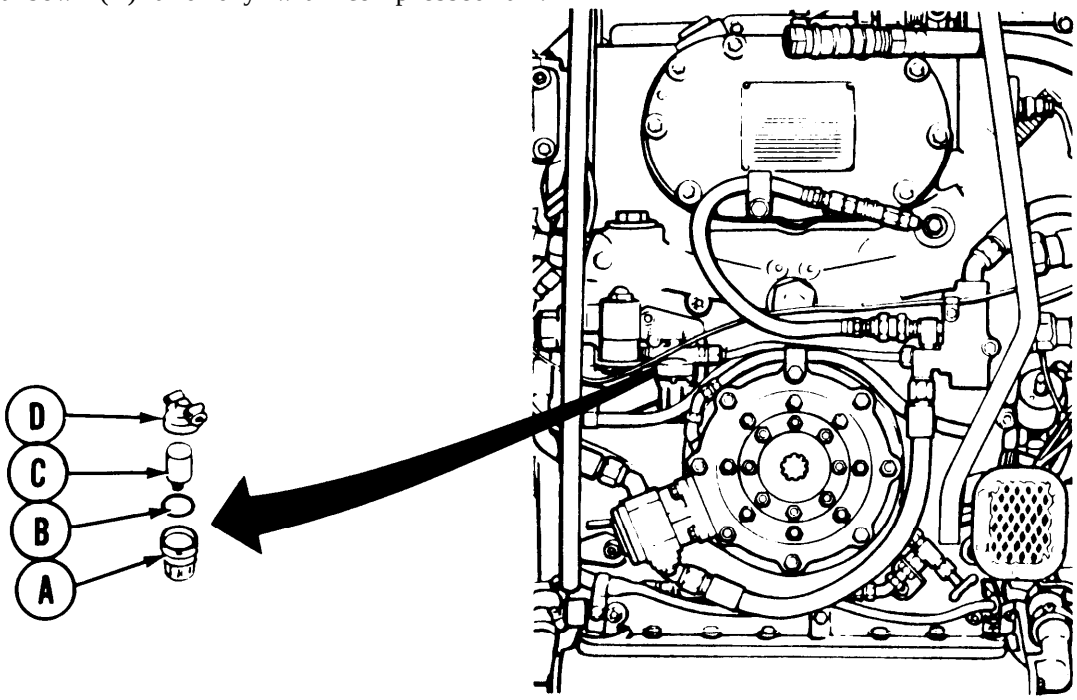

INSTALLATION:

1. Position new filter element (A) in filter bowl (B).

2. Position new preformed packing (C) over lip of filter bowl (B) and install to filter head (D).

3. Using adjustable wrench, tighten filter bowl (B) to filter head (D).

4. Operate purge pump (TM 5-5420-202-10) and check for leaks. If leak is found, tighten filter bowl.

5. Install engine access covers (pages 17-12 and 17-14).

TA248375

MANIFOLD HEATER FUEL FILTER AND INPUT FUEL LINE REPLACEMENT (Sheet 8 of 8)
Fuel Filter Input Fuel Line Replacement (Sheet 1 of 1)

TOOLS: 1/2 in. open end wrench
5/8 in. open end wrench

SUPPLIES: Clean bucket or drip pan

REFERENCE: TM 5-5420-202-10

PRELIMINARY PROCEDURE: Remove engine access covers (pages 17-11 and 17-13)

REMOVAL:

CAUTION
When removing or installing fuel lines care must be taken not to damage fittings and threads or twist or distort fuel lines or hoses.

NOTE
Use a suitable container to catch any fuel that may leak out wherever any part of the fuel system is loosened or disconnected.

1. Using 1/2 inch and 5/8 inch open end wrenches, disconnect both ends of tube assembly (A) from adapters (B and C).
2. Remove tube assembly (A).

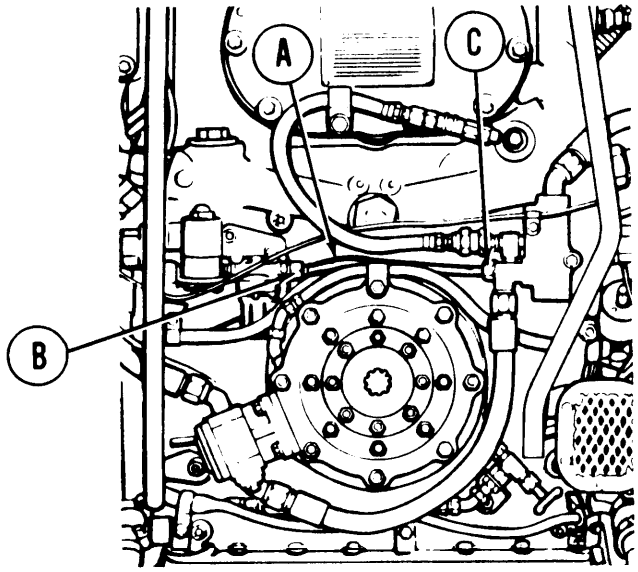

INSTALLATION:

1. Position tube assembly (A) to adapter (B and C).
2. Using 1/2 inch and 5/8 inch open end wrench, install tube assembly to adapters.
3. operate purge pump (TM 5-5420-202-10) and check for leaks. If leak is found, tighten connection as required.
4. Install engine access covers (pages 17-12 and 17-14).

End of Task

TA248376

MANIFOLD HEATER INPUT SOLENOID VALVE AND FUEL LINE REPLACEMENT (Sheet 1 of 10)

PROCEDURE INDEX

PROCEDURE	PAGE
Input Fuel Line Replacement	7-253
Input Solenoid Valve Replacement	7-258

INPUT FUEL LINE REPLACEMENT (Sheet 1 of 5)

PROCEDURE INDEX

PROCEDURE	PAGE
Removal	7-253
Installation	7-256

TOOLS: 9/16 in. socket with 1/2 in. drive
3/8 in. combination box and open end wrench
7/16 in. combination box and open end wrench
Flat-tip screwdriver
Ratchet with 1/2 in. drive

Supplies: Container
Rags (Item 12, Appendix D)

PRELIMINARY PROCEDURE: Remove powerplant (page 5-2)

REMOVAL:

NOTE

Replacement instructions for left or right side manifold heater input lines are same except as noted.

Go on to Sheet 2

MANIFOLD HEATER INPUT SOLENOID VALVE AND FUEL LINE REPLACEMENT (Sheet 2 of 10)
Input Fuel Line Replacement (Sheet 2 of 5)

1. Using 3/8 inch wrench and screwdriver, remove screws (A) and nuts (B) that secure five clamps (C) on engine left side, or five clamps (D) on engine right side.

2. Using socket, remove nut (E) securing clamp (F) (right side only).

3. Remove clamps (C, D, and F) from tube assembly (G or H).

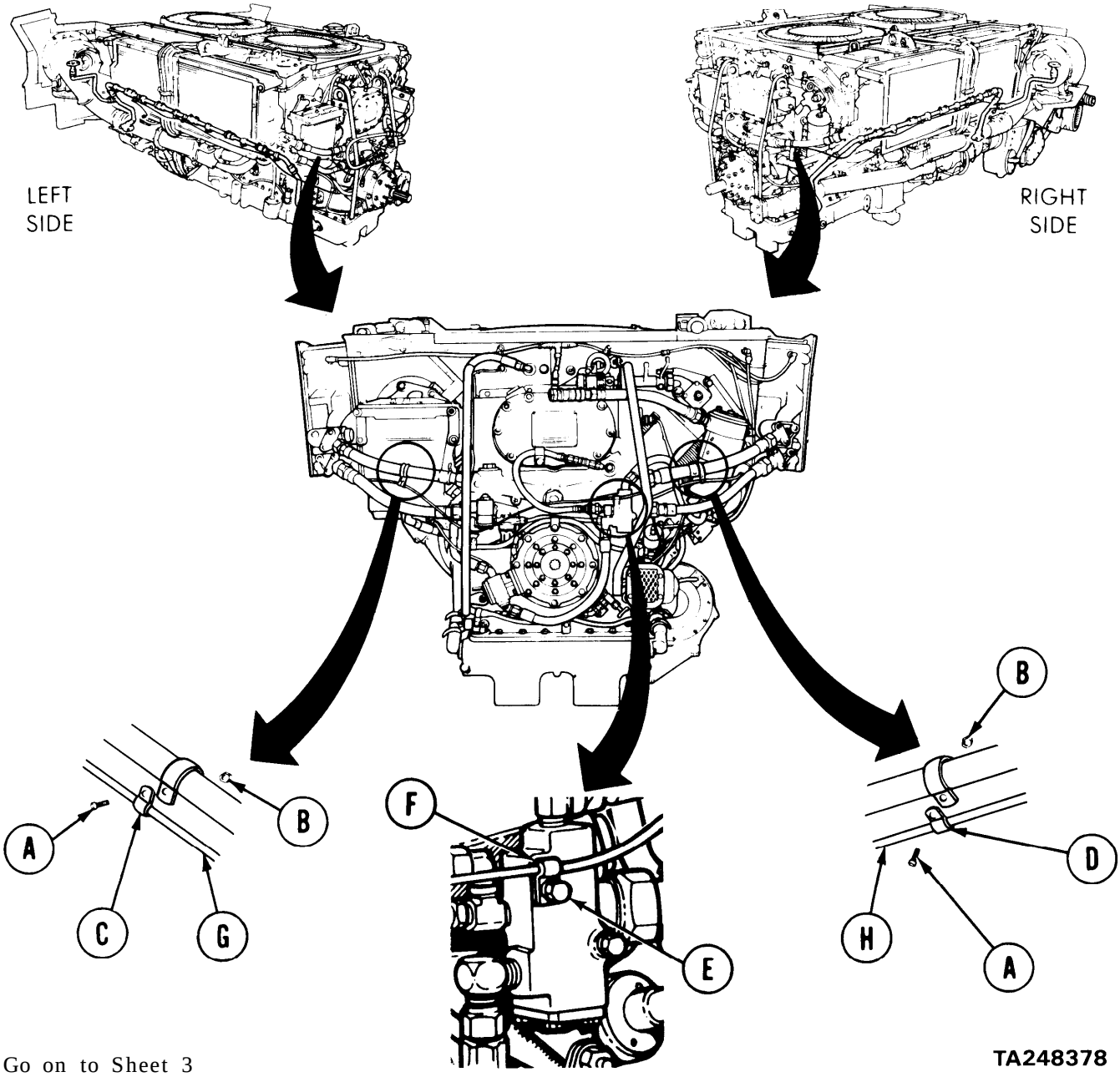

Go on to Sheet 3

MANIFOLD HEATER INPUT SOLENOID VALVE AND FUEL LINE REPLACEMENT (Sheet 3 of 10)
Input Fuel Line Replacement (Sheet 3 of 5)

NOTE

Use suitable container to catch fuel whenever any fuel line or connection is loosened or disconnected. Use rags to wipe any spillage.

4. Using 7/16 inch wrench, disconnect one end of fuel line (J) or (K) from elbow (L) and other end from tee (M).

5. Remove input fuel line (J) or (K).

6. Inspect elbows and tee for damage. Replace as necessary.

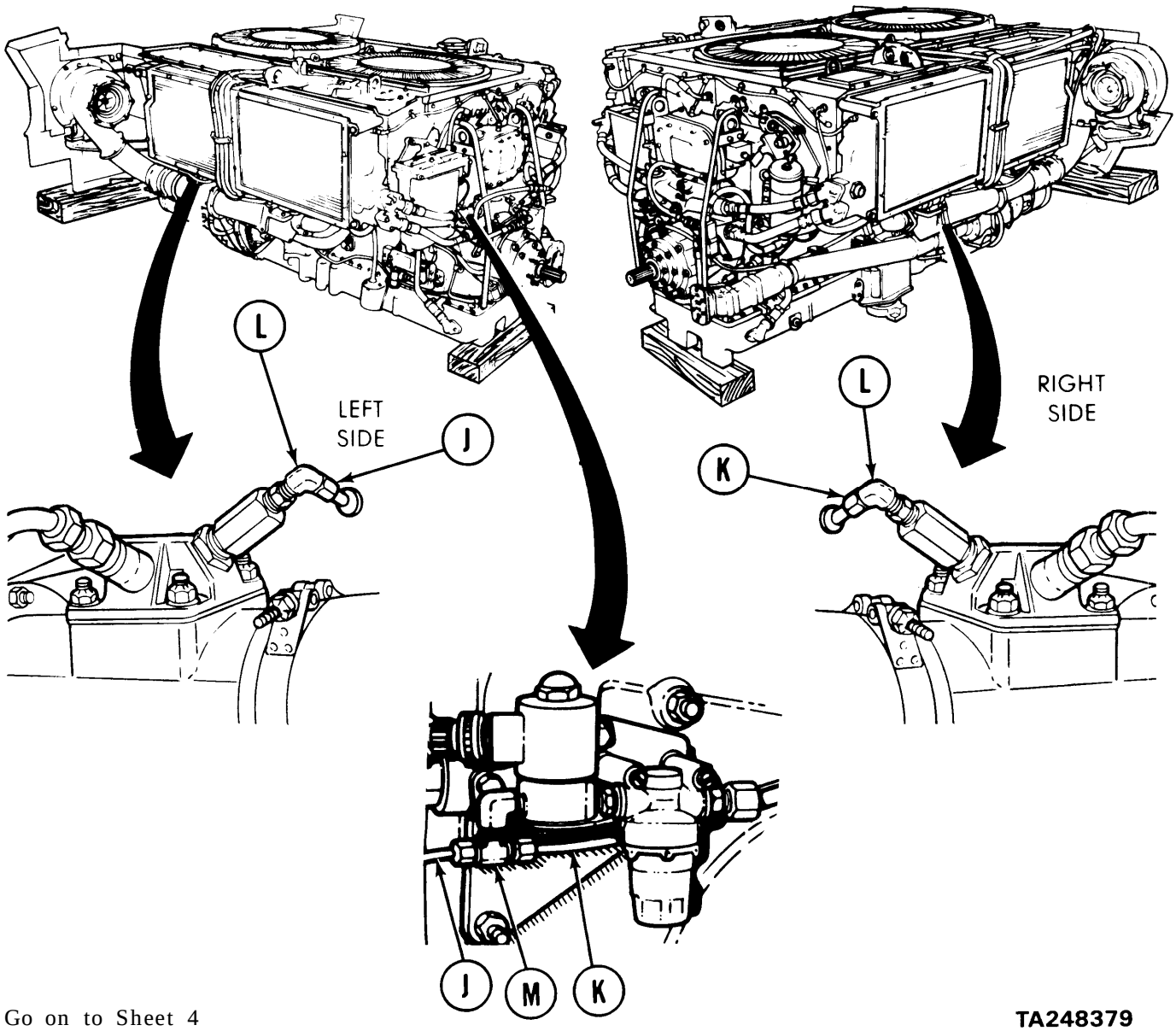

Go on to Sheet 4

TA248379

MANIFOLD HEATER INPUT SOLENOID VALVE AND FUEL LINE REPLACEMENT (Sheet 4 of 10)
Input Fuel Line Replacement (Sheet 4 of 5)

INSTALLATION:

1. Position input fuel line (A) or (B) in place on engine.

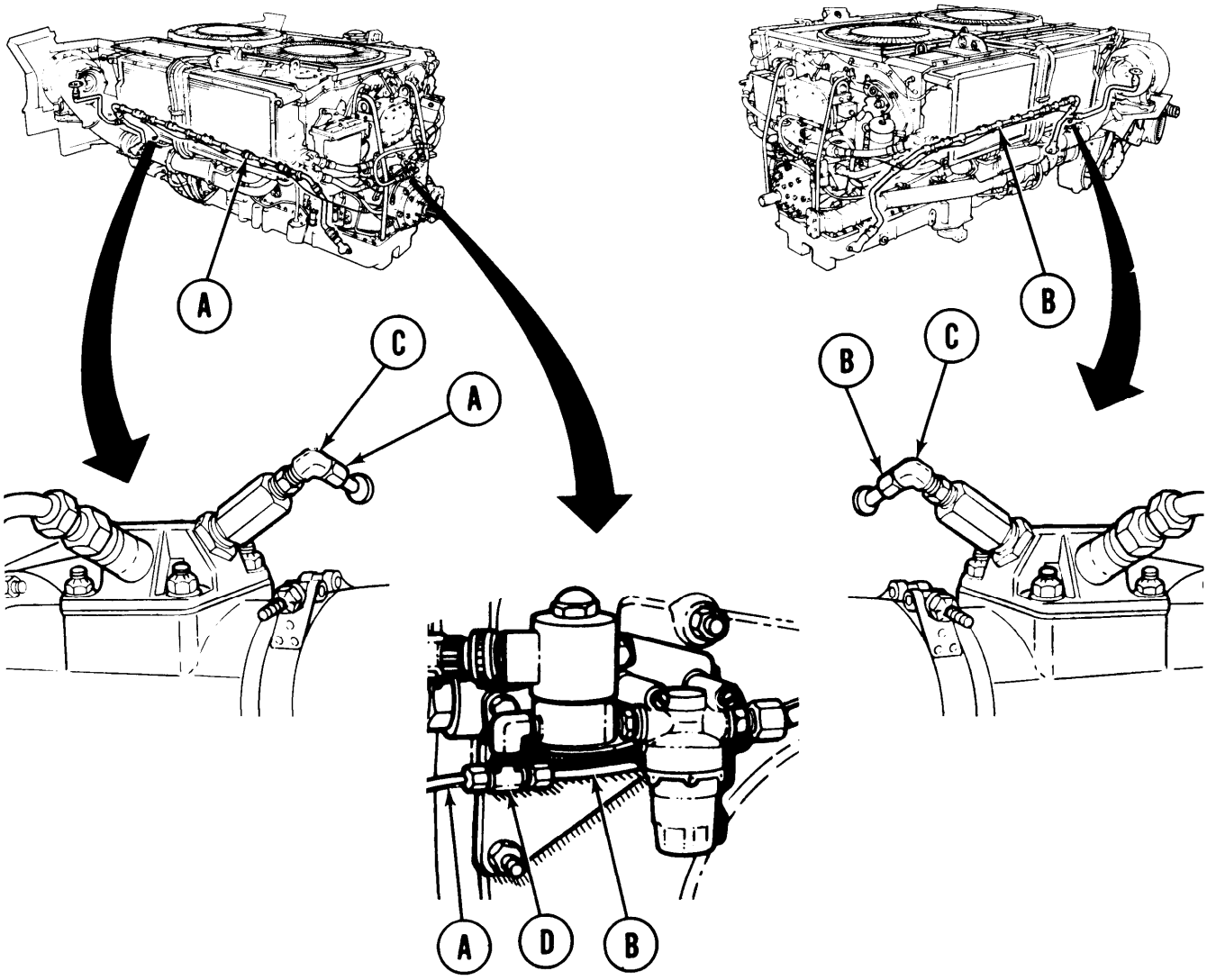

2. Connect one end of fuel line (A) of (B) to elbow (C) and other end to tee (D).

3. Using 7/16 inch wrench, tighten input fuel line (A) or (B) at elbow (C) and tee (D).

Go on to Sheet 5

TA248380

MANIFOLD HEATER INPUT SOLENOID VALVE AND FUEL LINE REPLACEMENT (Sheet 5 of 10)
Input Fuel Line Replacement (Sheet 5 of 5)

4. Install clamps (E) onto input fuel line (A) or (B).

5. Install screws (F) and nuts (G) to secure clamps (E) to clamps (H). Using 3/8 inch wrench and screwdriver, tighten screws (F) and nuts (G).

6. Install clamps (J) onto input fuel line (B).

7. Install nut (K) to secure clamp (J). Using socket, tighten nut (K) (right side only).

8. Perform manifold heater operational check (page 7-292).

9. Install powerplant (page 5-14).

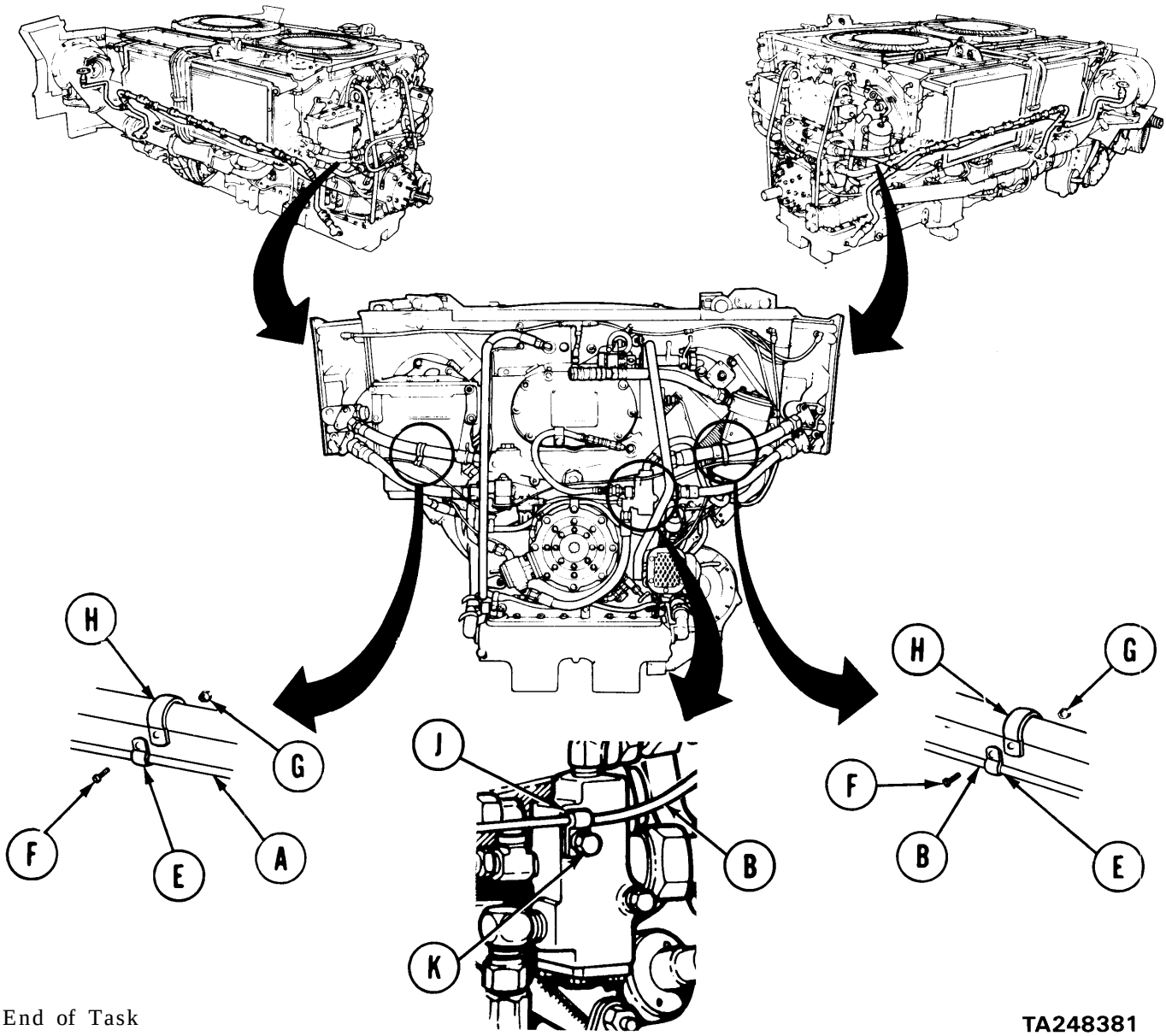

End of Task

TA248381

MANIFOLD HEATER INPUT SOLENOID VALVE AND FUEL LINE REPLACEMENT (Sheet 6 of 10)
Input Solenoid Valve Replacement (Sheet 1 of 5)

PROCEDURE INDEX

PROCEDURE	PAGE
Removal	7-258
Installation	7-264

TOOLS: 5/16 in. combination box and open end wrench
7/16 in. combination box and open end wrench
1/2 in. combination box and open end wrench
9/16 in. combination box and open end wrench
5/8 in. combination box and open end wrench
Flat-tip screwdriver

SUPPLIES: Container to catch fuel leakage
Rags (Item 12, Appendix D)
Sealing compound (Item 28, Appendix D)
Lockwashers

REFERENCE: TM 5-5420-202-10

PRELIMINARY PROCEDURE: Remove powerplant (page 5-2)

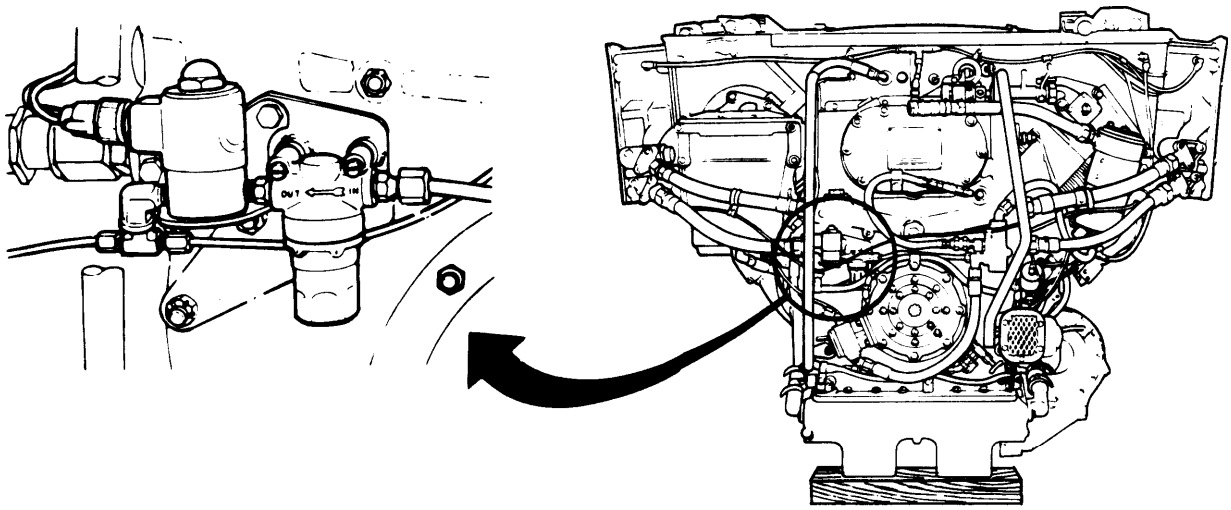

TA248382

Go on to Sheet 2

MANIFOLD HEATER INPUT SOLENOID VALVE AND FUEL LINE REPLACEMENT (Sheet 7 of 10)
Input Solenoid Valve Replacement (Sheet 2 of 5)

NOTE

Use suitable container to catch fuel whenever any fuel line or connection is loosened or disconnected. Use cloth to wipe any spillage. Discard cloth and drained fuel in accordance with local procedures.

REMOVAL:

1. Disconnect electrical lead (A) from solenoid valve (B).

2. Using 7/16 inch and 1/2 inch wrenches, disconnect two fuel lines (C) from tee (D).

3. Using 1/2 inch and 5/8 inch wrenches, remove tube (E) from adapter (F).

4. Using 5/16 inch wrench, remove two screws and washers (G).

5. Using screwdriver, remove two screws (H) with lockwashers and flat washers.

6. Remove solenoid valve (B), fuel filter (J), and attached fittings as a unit.

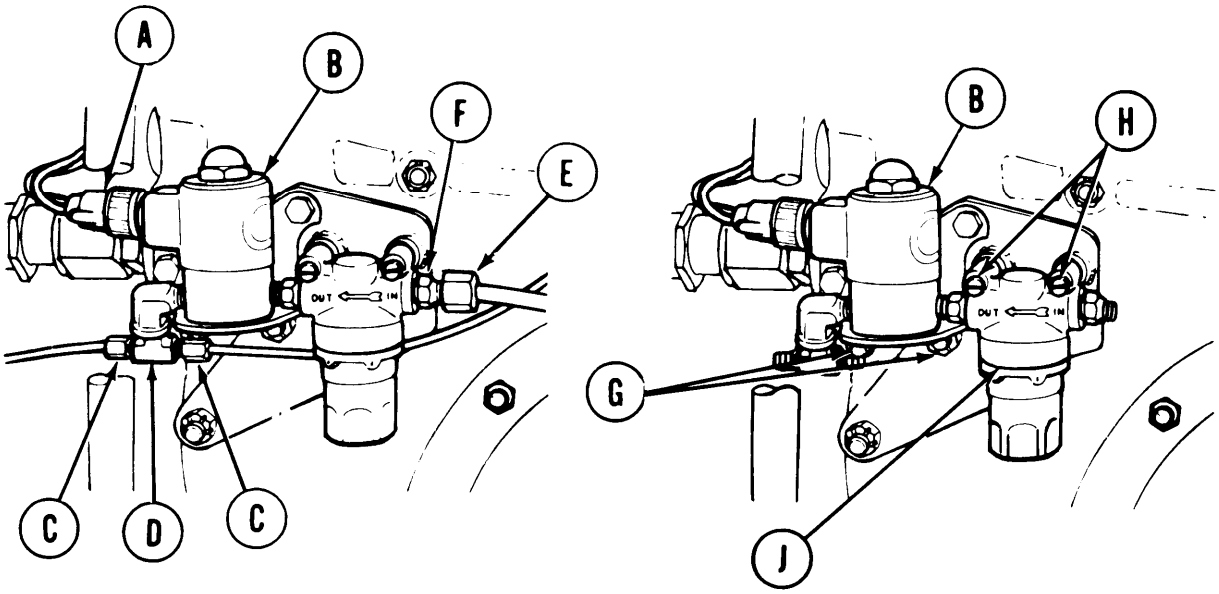

Go on to Sheet 3

TA248383

MANIFOLD HEATER INPUT SOLENOID VALVE AND FUEL LINE REPLACEMENT (Sheet 8 of 10)
Input Solenoid Valve Replacement (Sheet 3 of 5)

7. Using 7/16 inch wrench, hold nipple (K) and remove filter (J) from nipple (K).

8. Using 7/16 inch wrench, remove nipple (K) from solenoid valve (B).

9. Using 7/16 inch wrench, remove tee (D).

10. Using 9/16 inch wrench, remove elbow (L) from solenoid valve (B).

11. Using 7/16 inch wrench, remove two screws (M) securing bracket (N).

12. Remove bracket (N).

13. Inspect all parts removed. Replace parts as necessary.

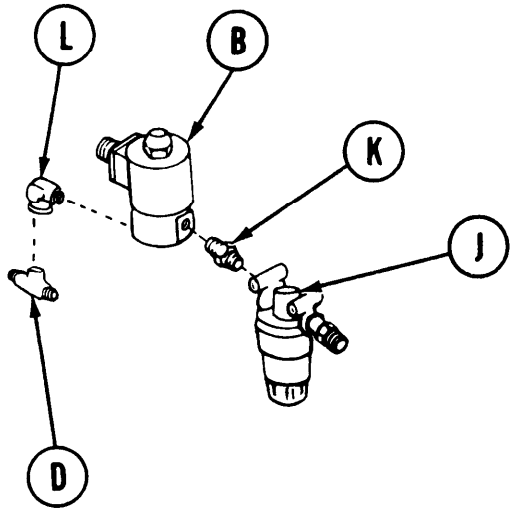

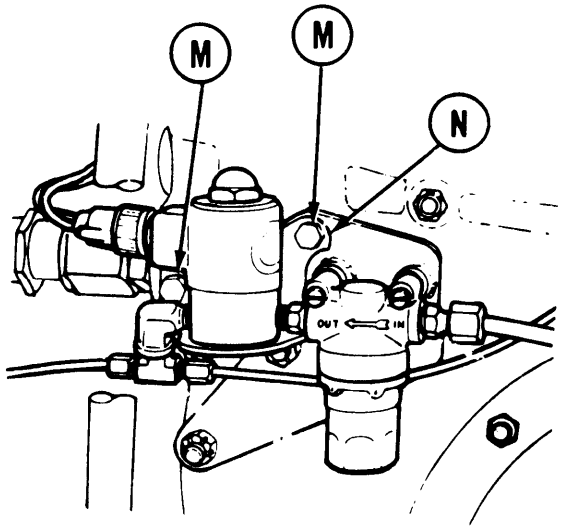

Go on to Sheet 4

TA248384

MANIFOLD HEATER INPUT SOLENOID VALVE AND FUEL LINE REPLACEMENT (Sheet 9 of 10)
Input Solenoid Valve Replacement (Sheet 4 of 5)

INSTALLATION:

NOTE

Coat male threads of elbow, tee, and adapter with sealing compound before installation.

1. Install and aline elbow (A) as shown to solenoid valve (B). Using 9/16 inch wrench, tighten elbow.
2. Install and aline tee (C) to elbow (A) as shown. Using 7/16 inch wrench, tighten tee.
3. Install nipple (D) to solenoid valve (B). Using 7/16 inch wrench, tighten nipple.
4. Using 7/16 inch wrench, hold nipple (D) and install fuel filter (E) on nipple. Aline filter as shown.
5. Position bracket (F) in place on engine.
6. Install two screws (G) to secure bracket. Using 7/16 inch wrench, tighten screws.

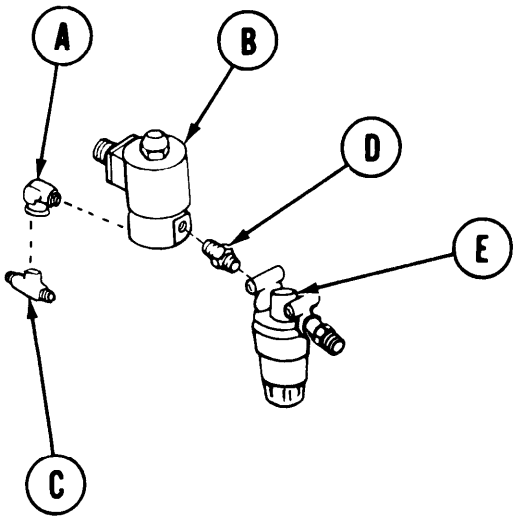

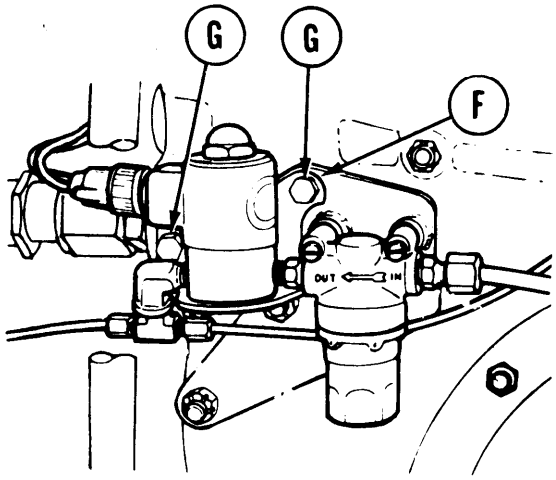

Go on to Sheet 5

TA248385

MANIFOLD HEATER INPUT SOLENOID VALVE AND FUEL LINE REPLACEMENT (Sheet 10 of 10)
Input Solenoid Valve Replacement (Sheet 5 of 5)

7. Position solenoid valve (B) and fuel filter (E) with attached fittings to brackets on engine.

8. Install two screws (H) with lockwashers and flat washers to secure fuel filter (E) to engine bracket. Using screwdriver, tighten screws.

9. Install two screws and washers (J) to secure solenoid valve (B) to bracket. Using 5/16 inch wrench, tighten screws.

10. Connect two fuel lines (K) to tee (C). Using 7/16 inch wrench, tighten fuel line nuts.

11. Connect tube assembly (L) to adapter (M). Using 1/2 inch and 5/8 inch wrenches, tighten hose nut to adapter.

12. Connect electrical lead (N) to solenoid valve (B).

13. Operate purge pump (TM 5-5420-202-10) Check for leaks. If leaks are found, tighten connections as required.

14. Install powerplant (page 5-14).

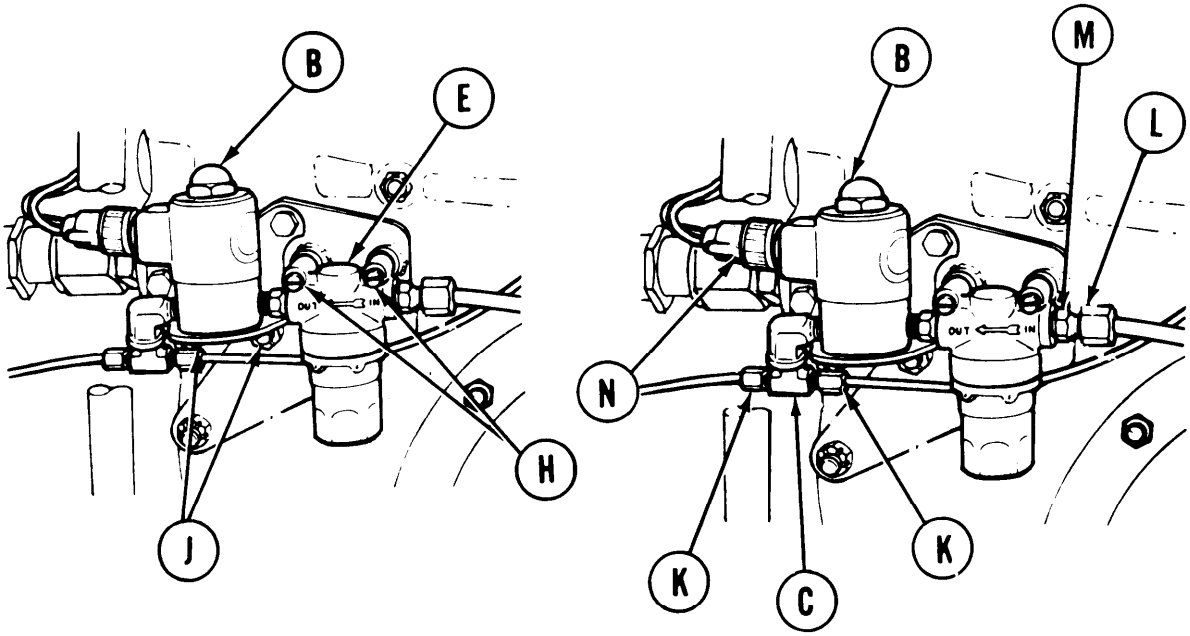

TA248386

End of Task

CHECK VALVE (MANIFOLD HEATER - RETURN FUEL) REPLACEMENT (Sheet 1 of 3)

TOOLS: 7/16 in. combination box and open end wrench
9/16 in. combination box and open end wrench
13/16 in. combination box and open end wrench
Wire brush

SPECIAL TOOLS: Ground hop kit (Item 31, Chapter 3, Section I)

SUPPLIES: Drain pan
Sealing compound (Item 28, Appendix D)

REFERENCE: TM 5-5420-202-10

PRELIMINARY PROCEDURES: Remove powerplant (page 5-2)
Remove engine shroud (page 9-30)

REMOVAL:

CAUTION

When removing or installing fuel lines, care must be taken not to damage fittings and threads or twist or distort fuel lines or hoses.

NOTE

It maybe necessary to use two wrenches for removal or installation of hoses and tubes.

Go on to Sheet 2

TA248387

CHECK VALVE (MANIFOLD HEATER - RETURN FUEL) REPLACEMENT (Sheet 2 of 3)

NOTE

Use a suitable container to catch any fuel that may leak out whenever any part of the fuel system is loosened or disconnected.

REMOVAL:

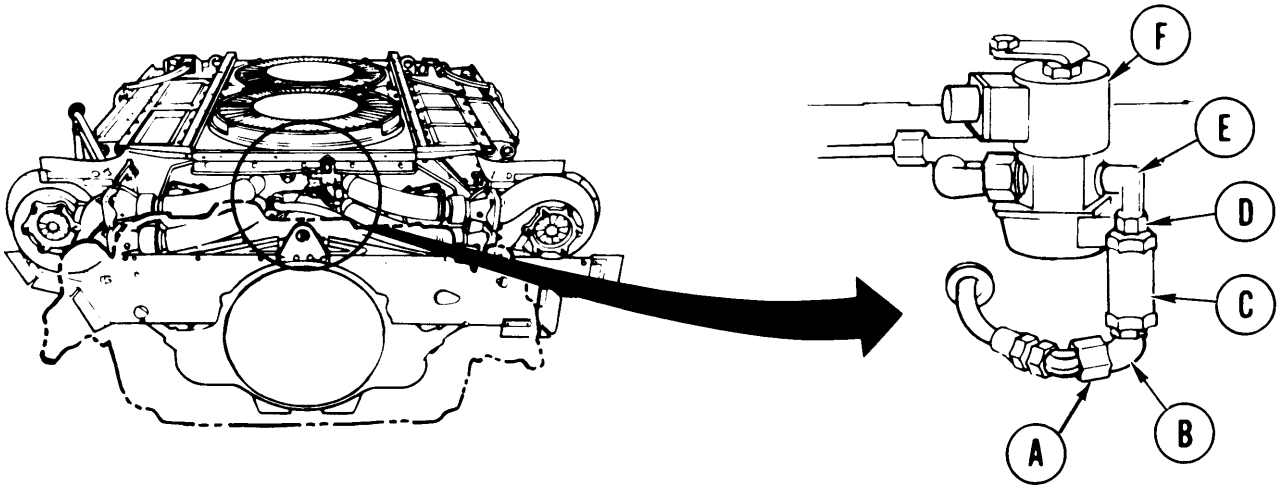

1. Using 7/16 inch and 9/16 inch wrenches, disconnect end fitting of hose assembly (A) from elbow (B).
2. Using 7/16 inch and 13/16 inch wrenches, remove elbow (B) from check valve (C).
3. Using 13/16 inch and 7/16 inch wrenches, remove check valve (C) from nipple (D).
4. Using 7/16 inch and 9/16 inch wrenches, remove nipple (D) from elbow (E).
5. Using 9/16 inch wrench, remove elbow (E) from solenoid valve (F).

CLEANING AND INSPECTION:

1. Using wire brush, clean threaded parts and inspect for damaged threads.
2. Inspect all hoses, tube assemblies, and fittings for cracks and general serviceability.
3. Repair or replace parts as needed.

Go on to Sheet 3

TA248388

CHECK VALVE (MANIFOLD HEATER - RETURN FUEL) REPLACEMENT (Sheet 3 of 3)

INSTALLATION:

1. Coat threads of elbow (A), nipple (B), check valve (C), and elbow (D) with sealing compound.

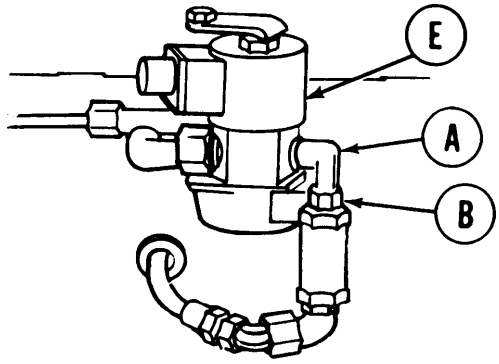

2. Using 9/16 inch wrench, install elbow (A) in solenoid valve (E) in position shown.

3. Install nipple (B) to elbow (A).

4. Install check valve (C) to nipple (B).

5. Install elbow (D) to check valve (C).

6. Using proper wrenches, tighten and aline parts (B), (C), and (D) to be able to connect hose assembly (F) to elbow (D).

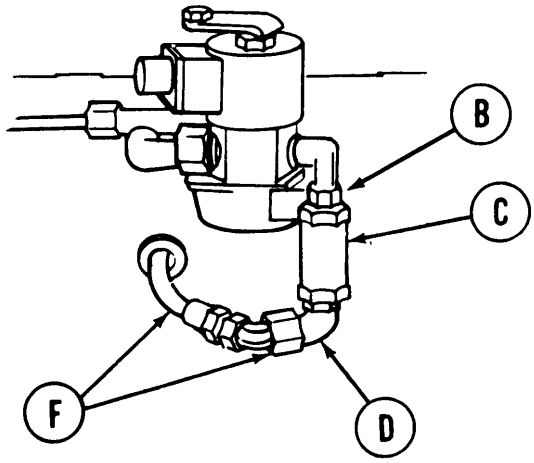

7. Connect hose assembly (F) to elbow (D).

8. Using 7/16 inch and 9/16 inch wrenches, tighten hose assembly (F) connection to elbow (D).

9. Connect engine ground hop (page 5-25). DO NOT start engine.

10. Operate purge pump (TM 5-5420-202-10) and check for leaks. If leaks are found, tighten connections as required.

11. Disconnect engine ground hop (page 5-40).

12. Install engine shroud (page 9-31).

13. Install powerplant (page 5-14).

End of Task **TA248389**

MANIFOLD HEATER FUEL RETURN TUBE ASSEMBLY REPLACEMENT (LEFT AND RIGHT BANK) (Sheet 1 of 7)

PROCEDURE INDEX

PROCEDURE	PAGE
Removal	7-266
Cleaning and Inspection	7-269
Installation	7-270

TOOLS: 5/16 in. combination box and open end wrench
1/2 in. combination box and open end wrench
9/16 in. combination box and open end wrench (2 required)
1/2 in. socket with 1/2 in. drive
8 in. adjustable wrench
Flat-tip screwdriver
Hammer, 2 lb ball peen
Ratchet with 1/2 in. drive

SUPPLIES: Clean rags (Item 12, Appendix D)
Sealing compound (Item 27, Appendix D)
Dry cleaning solvent (Item 55, Appendix D)
Container
Gloves (Item 69, Appendix D)
Goggles (Item 70, Appendix D)

PERSONNEL: Two

PRELIMINARY PROCEDURES: Remove powerplant (page 5-2)
Remove engine shroud (page 9-30)

CAUTION

When removing or installing fuel lines, care must be taken not to damage fittings and threads or twist or distort fuel lines or hoses.

NOTE

There are two manifold heater fuel return tube assemblies, one for the left bank and one for the right bank. Removal and installation procedures for both tube assemblies are similar. This procedure covers the right bank tube assembly.

Go on to Sheet 2

TA248390

MANIFOLD HEATER FUEL RETURN TUBE ASSEMBLY REPLACEMENT (LEFT AND RIGHT BANK) (Sheet 2 of 7)

NOTE

Use a suitable container to catch any fuel that may leak out whenever any part of the fuel system is loosened or disconnected.

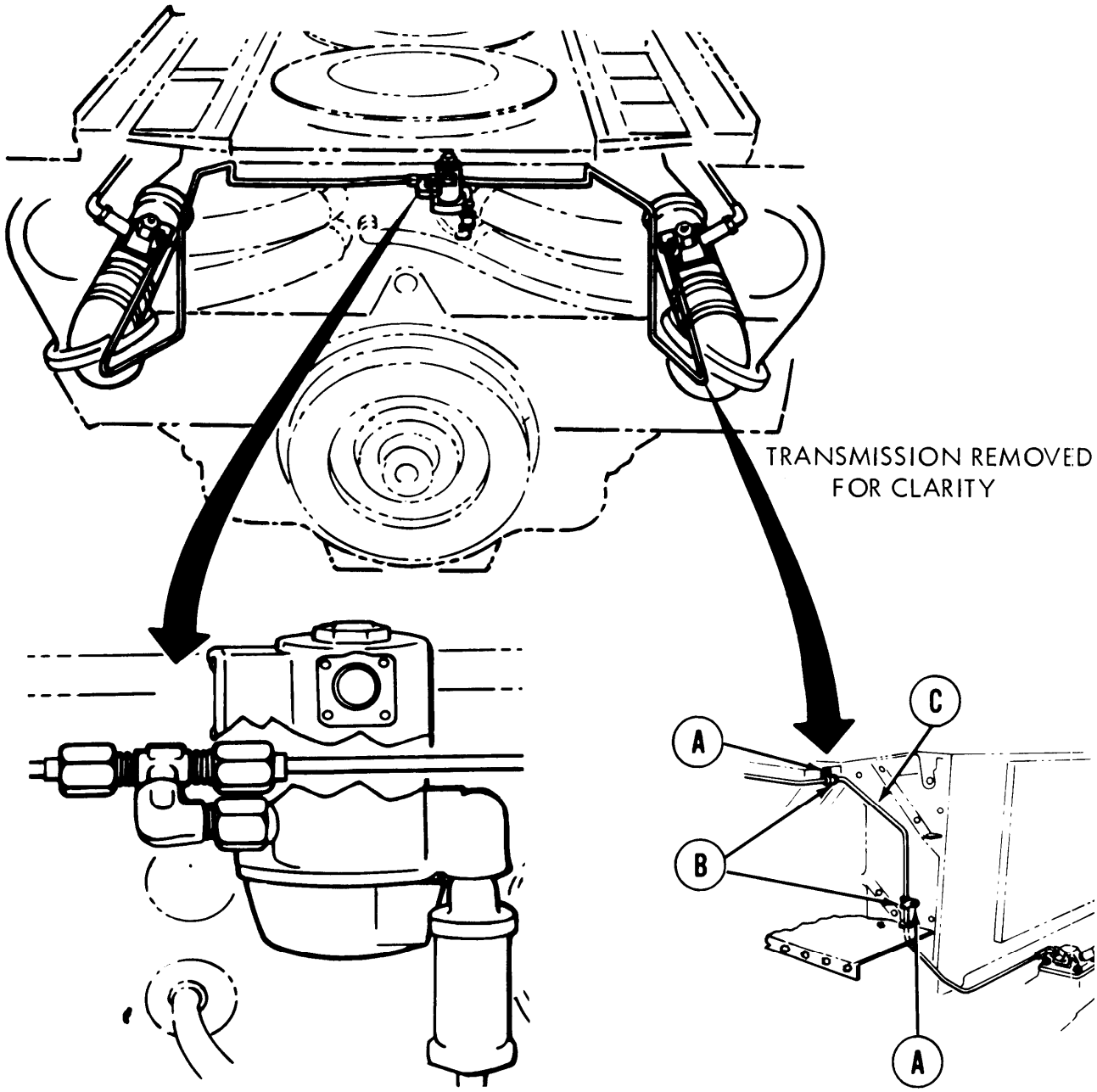

REMOVAL:

1. Using screwdriver and 1/2 inch wrench, remove two screws and washers (A) from two clamps (B).

2. Using fingers, remove clamps (B) from tube assembly (C).

Go on to Sheet 3

MANIFOLD HEATER FUEL RETURN TUBE ASSEMBLY REPLACEMENT (LEFT AND RIGHT BANK) (Sheet 3 of 7)

3. Using 1/2inch socket, ratchet, and 1/2 inch wrench, remove four screws and washers (D) fro m lower engine cooling fan shroud (E).

4. Using screwdriver, remove two screws and washers (F) from lower engine cooling fan shroud (E). (Left screw is hidden. You will have to feel for it.)

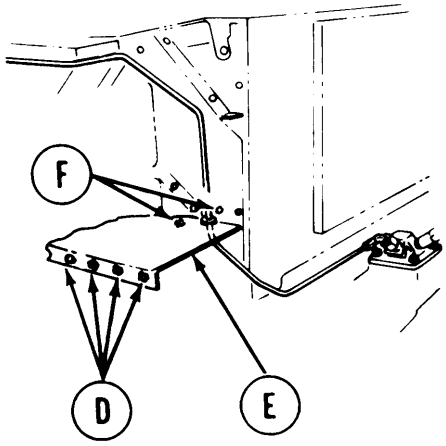

NOTE

The engine cooling fan shroud (E) must be slightly displaced in step 5 to allow clearance for removal of the manifold heater return tube (C).

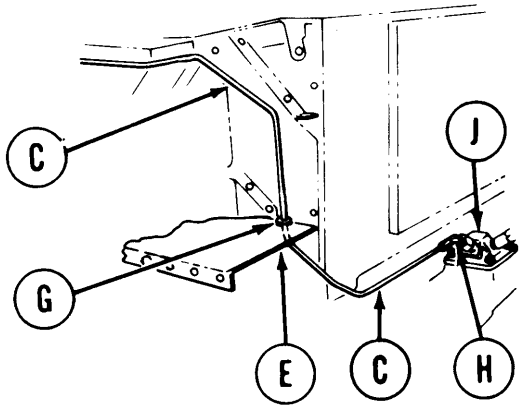

5. Using hammer handle, tap on bottom of engine cooling fan shroud (E). Second technician, using screwdriver, pry up on front lip of cooling fan shroud and slightly displace it.

6. Using fingers, remove grommet (G) from tube assembly (C).

7. Using 9/16 inch wrench, remove line nut of tube assembly (C) from elbow (H) on manifold heater (J).

TA248392

Go on to Sheet 4

MANIFOLD HEATER FUEL RETURN TUBE ASSEMBLY REPLACEMENT (LEFT AND RIGHT BANK) (Sheet 4 of 7)

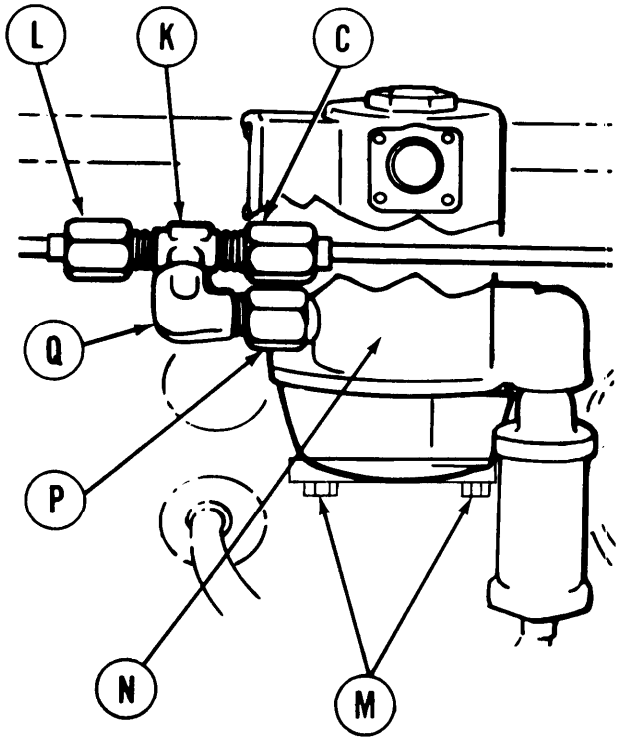

8. Using 9/16 inch wrench, remove line nut of tube assembly (C) from tee (K).

9. Using 9/16 inch wrench, remove line nut of tube assembly (L) from tee (K).

10. Using 5/16 inch open end wrench, remove two screws (M) and pull solenoid valve (N) forward approximately 1 inch.

11. Using 1/2 inch open end wrench on coupling (P), remove coupling (P) with elbow (Q) and tee (K) attached.

12. Using 9/16 inch wrench on elbow (Q) and adjustable wrench on tee (K), remove tee (K) from elbow' (Q).

13. Using 9/16 inch wrench on elbow (Q) and 1/2 inch wrench on coupling (P), remove elbow (Q) from coupling (P).

14. Push engine cooling fan shroud aside to allow clearance for rem oval of tube assembly (C). Other technician, using both hands, carefully remove tube assembly (C) from engine.

CLEANING AND INSPECTION:

WARNING

Dry cleaning solvent P-D-680 is toxic and flammable. To prevent personal injury, wear protective goggles and gloves and use only in a well-ventilated area. Avoid contact with skin eyes, and clothes and don't breathe vapors. Do not use near open flame or excessive heat. The flash point for Type #1 Dry Cleaning Solvent is 100°(38°C) and for Type #2 is 138°F (50°C). If you become dizzy while using cleaning solvent, get fresh air immediately and get medical aid. If contact with eyes is made, wash your eyes with water and get medical aid immediately.

1. Using clean cloth and solvent, clean fittings thoroughly.

2. Inspect fittings for nicks, cracks, thread damage, or wear. Replace if required.

3. Inspect internal threads of manifold heater and solenoid adapter for damage.

Go on to Sheet 5

TA248393

MANIFOLD HEATER FUEL RETURN TUBE ASSEMBLY REPLACEMENT (LEFT AND RIGHT BANK) (Sheet 5 of 7)

INSTALLATION:

NOTE

Coat pipe thread fittings with sealing compound before installation

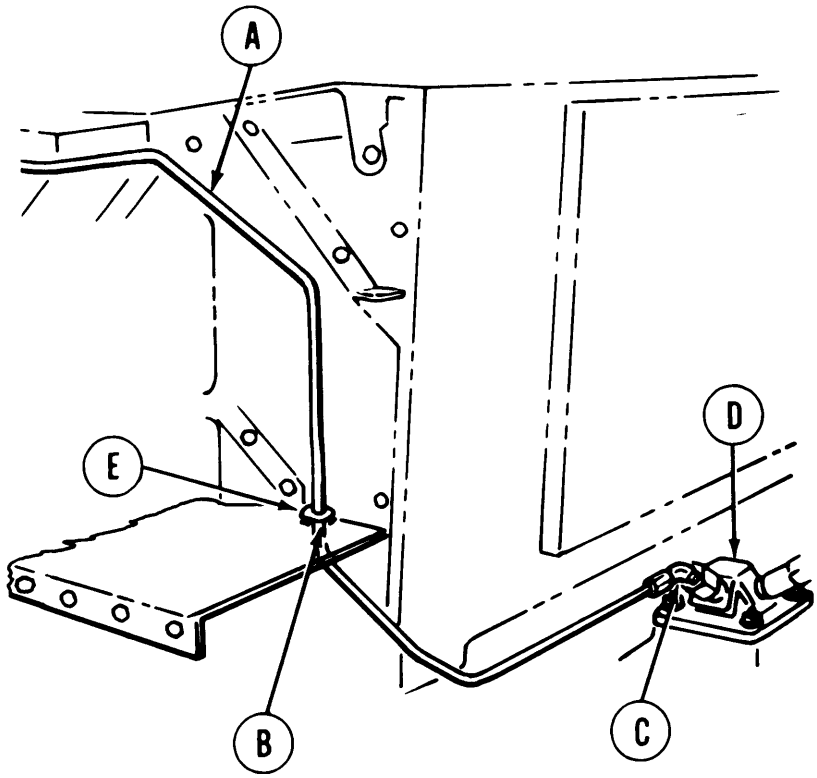

1. Using both hands, carefully push tube assembly (A) down through lower engine cooling shroud opening (B).

2. Using 9/16 inch wrench, install line nut of tube assembly (A) on elbow (C) at manifold heater (D).

3. Install grommet (E) on tube assembly (A) with flat side of grommet facing toward front of engine.

Go on to Sheet 6

TA248394

MANIFOLD HEATER FUEL RETURN TUBE ASSEMBLY REPLACEMENT (LEFT AND RIGHT BANK) (Sheet 6 of 7)

4. Using 9/16 inch wrench, install coupling (F) on elbow(G).

5. Using 9/16 inch wrench on elbow (G) and adjustable wrench on tee (H), install elbow (G) on tee (H).

6. Using 1/2 inch wrench, install coupling (F), elbow (G), and tee (H) to solenoid valve (J).

7. Using 9/16 inch wrench, install line nut of tube assembly (K) on tee (H).

8. Using 9/16 inch wrench, install line nut of tube assembly (C) on tee (H).

9. Position solenoid valve (J) on bracket (L).

10. Using 5/16 inch wrench, install two screws and washers (M) through bracket (L) and into solenoid valve (J).

11. Using fingers, install grommet (E) in slot of lower engine cooling fan shroud (N).

12. Using both hands, install lower engine cooling fan shroud (N) over mounting holes in engine bulkhead.

13. Using hands, manually install four screws and washers (P) in lower engine cooling fan shroud (N).

14. Using socket and 1/2 inch wrench, tighten four screws and washers (P) in lower engine cooling fan shroud (N).

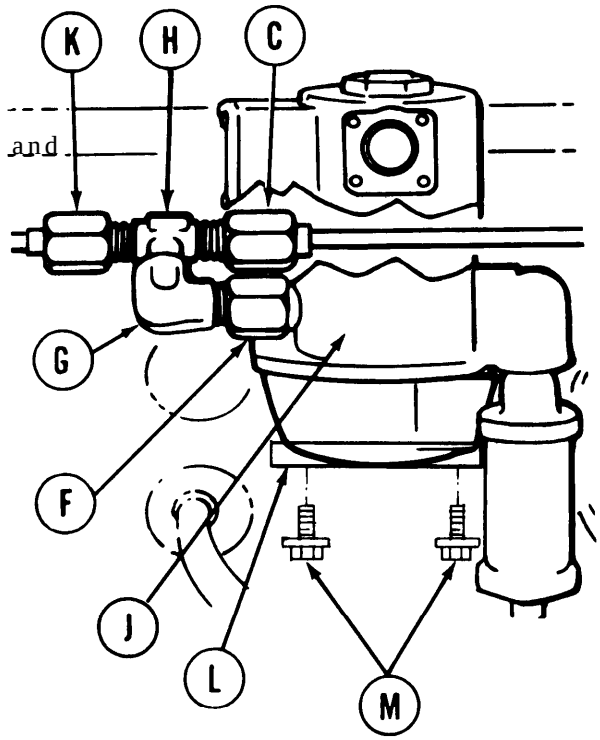

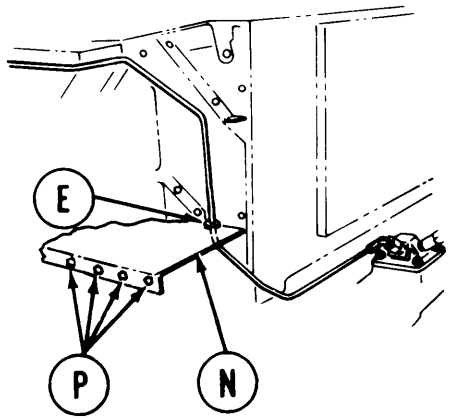

Go on to Sheet 7

TA248395

MANIFOLD HEATER FUEL RETURN TUBE ASSEMBLY REPLACEMENT (LEFT AND RIGHT BANK) (Sheet 7 of 7)

15. Using fingers, install clamps (Q) on tube assembly (A).

16. Using screwdriver and 1/2 inch wrench, install two screws and washers (R) through clamps (Q).

17. Using screwdriver, install two screws and washers (S) in lower engine cooling fan shroud (N).

18. Perform manifold heater operational check (page 7-291).

19. Install engine shroud (page 9-31).

20. Install powerplant (page 5-14).

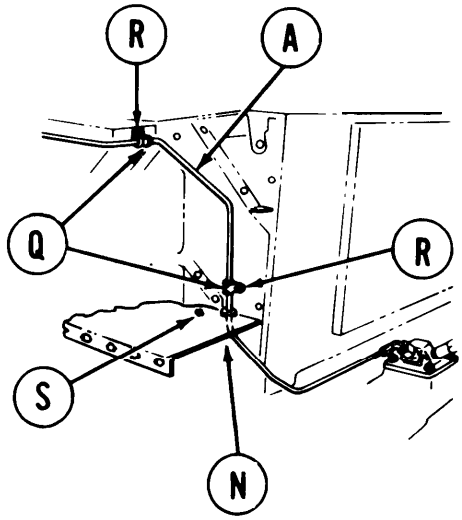

End of Task

TA248396

MANIFOLD HEATER NOZZLE REPLACEMENT (Sheet 1 of 3)

TOOLS: 7/16 in. combination box and open end wrench (2 required)
1/2 in. combination box and open end wrench
9/16 in. combination box and open end wrench
13/16 in. combination box and open end wrench
1 in. combination box and open end wrench

SUPPLIES: Rags (Item 65, Appendix D)

PRELIMINARY PROCEDURE: Remove powerplant (page 5-2)

NOTE

Nozzle on right manifold heater is shown. Nozzle on left manifold is similar.

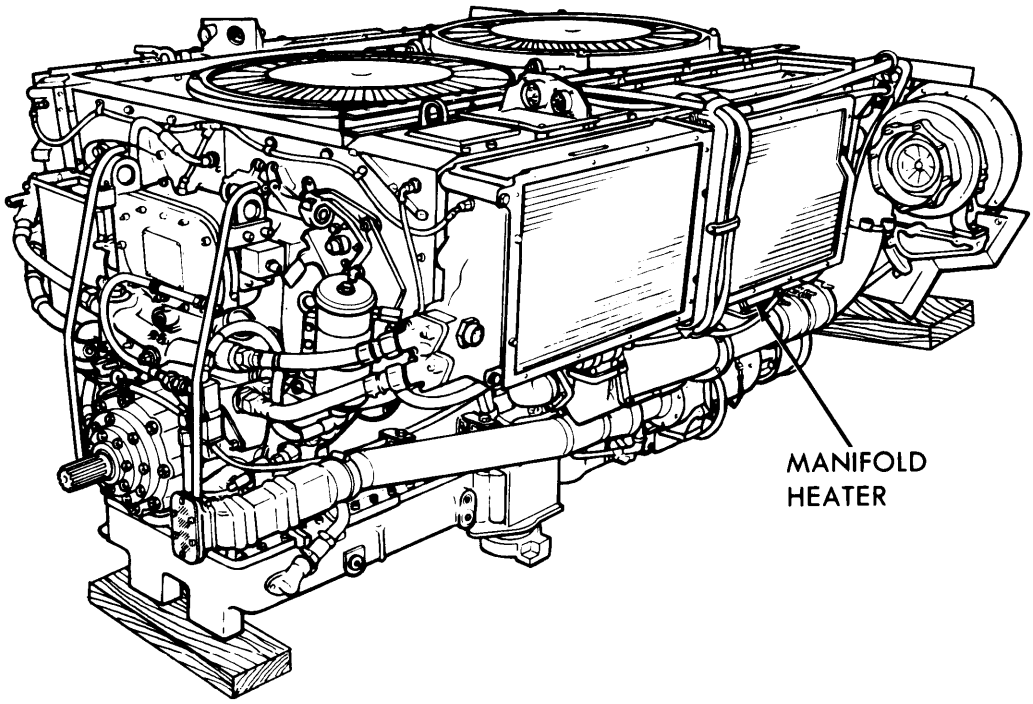

Go on to Sheet 2

TA248397

MANIFOLD HEATER NOZZLE REPLACEMENT (Sheet 2 of 3)

REMOVAL:

1. Using two 7/16 inch wrenches, disconnect fuel inlet line (A) from elbow (B).

2. Using 7/16 inch and 9/16 inch wrenches, disconnect fuel return line (C) from elbow (D).

3. Using 1 inch wrench, loosen jamnut (E).

4. Using 13/16 inch wrench, remove nozzle (F) with bushing (G) and elbows (B) and (D) from manifold heater (H).

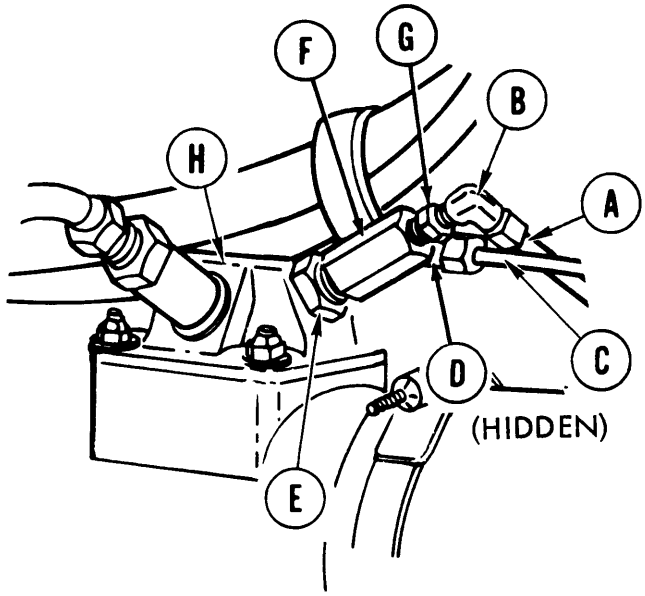

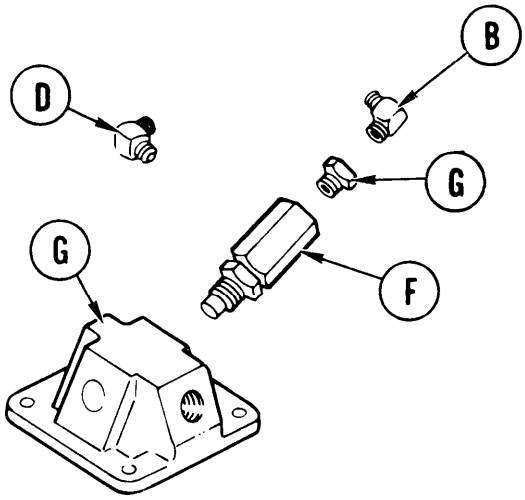

Using 1/2 inch wrench, remove elbow (D) and (if present) filtering disk from nozzle

Using 9/16 inch and 1/2 inch wrenches, remove elbow (B) from bushing (G).

7. Throw filtering disk away
Using 9/16 inch and 13/1 6 inch wrenches, remove bushing (G) and (if present) filtering disk. Throw filtering disk away.

8. Throw nozzle (F) away.

9. Inspect all parts disconnected or removed. Replace all items as necessary.

TA248398

Go on to Sheet 3

MANIFOLD HEATER NOZZLE REPLACEMENT (Sheet 3 of 3)

INSTALLATION:

1. Using 13/16 inch and 9/16 inch wrenches, install bushing (A) in new nozzle (B).

2. Using 9/16 inch and 1/2 inch wrenches, install elbow (C) to bushing (A).

3. Using 7/16 inch wrench, install elbow (D) into nozzle (B).

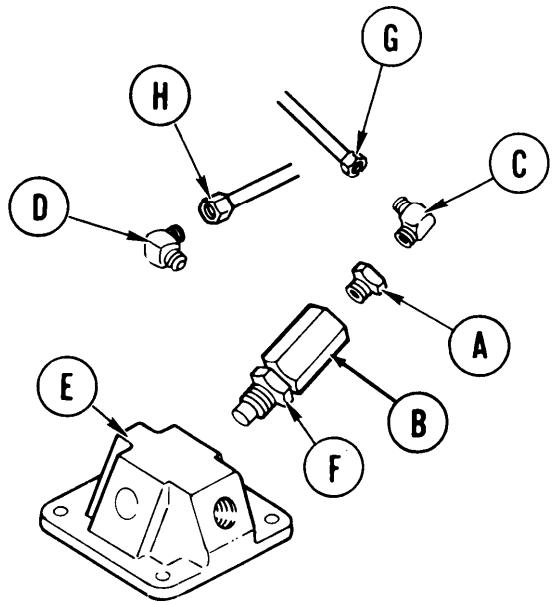

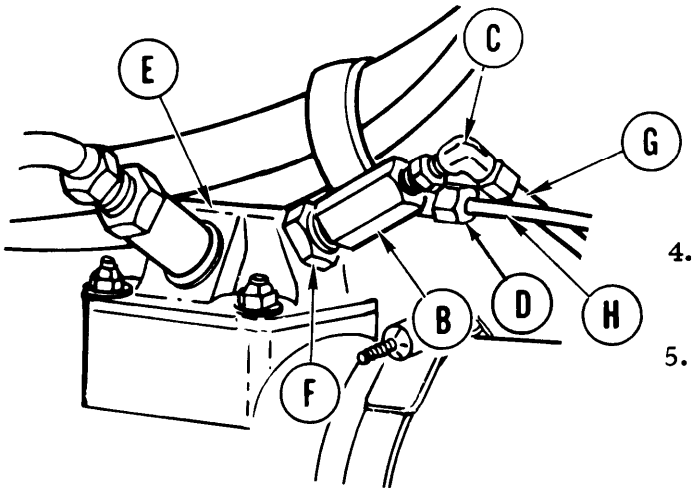

4. Install nozzle (B) with bushing (A) and elbows (C) and (D) into manifold heater (E).

5. Aline nozzle for ease of connecting fuel lines. Using 1 inch wrench, tighten jamnut (F).

6. Using two 7/16 inch wrenches, connect input fuel line (G) to elbow (C).

7. Using 7/16 inch and 9/16 inch wrenches, install return fuel line (H) to elbow (D).

8. Perform manifold heater operational check (page 7-291).

9. Install powerplant (page 5-14).

End of Task

TA248399

MANIFOLD HEATER (LEFT AND RIGHT) REPLACEMENT (Sheet 1 of 3)

TOOLS: 7/16 in. combination box and open end wrench
1/2 in. combination box and open end wrench
9/16 in. combination box and open end wrench
3/4 in. combination box and open end wrench

SUPPLIES: Drip pan
Rags (Item 12, Appendix D)
Gasket

PRELIMINARY PROCEDURE: Remove powerplant (page 5-2)

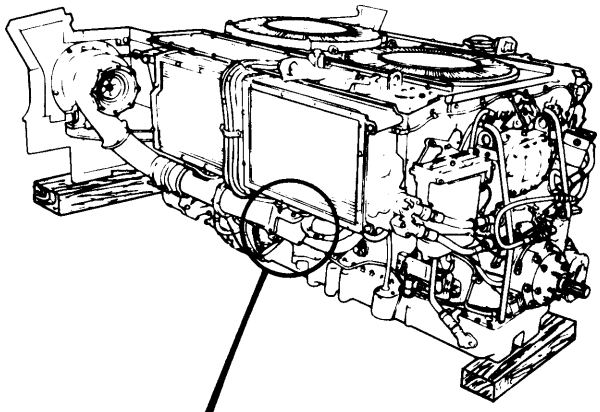

LEFT

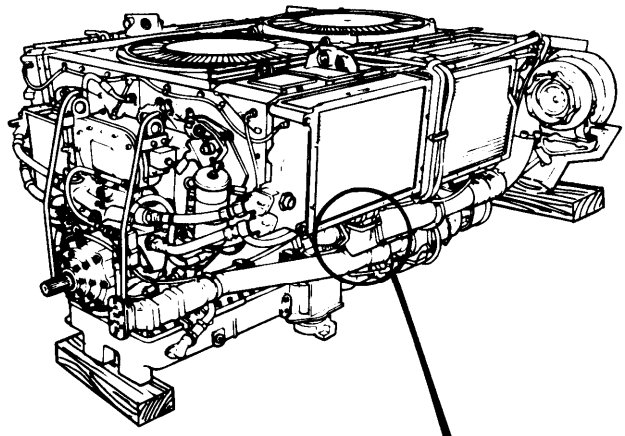

RIGHT

NOTE

Procedures for replacement of left or right manifold heater are the same. Procedures given here are for right manifold heater.

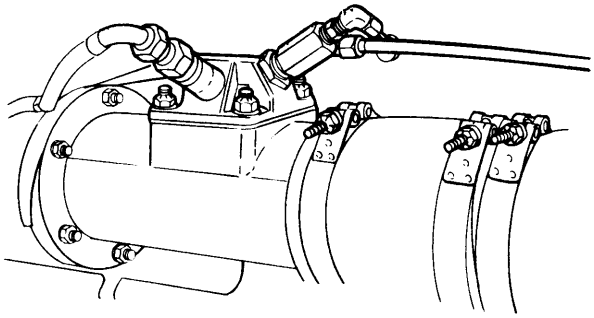

Go on to Sheet 2

TA248400

MANIFOLD HEATER (LEFT AND RIGHT) REPLACEMENT (Sheet 2 of 3)

REMOVAL:

1. Using 3/4 inch wrench, disconnect ignition lead (A) from spark plug (B).

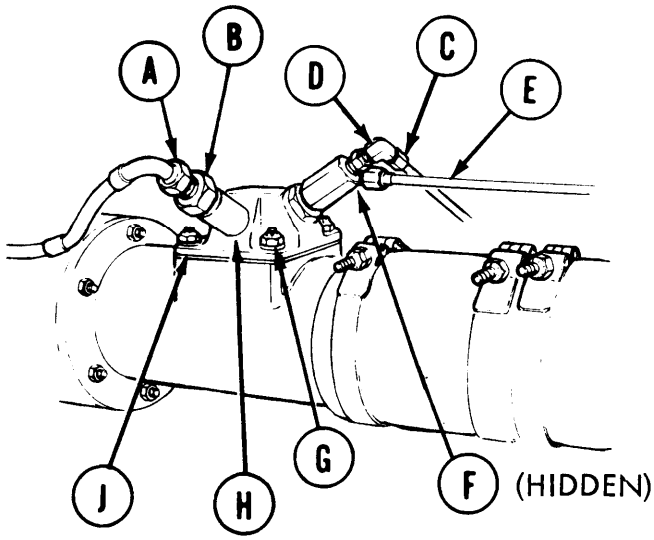

NOTE

Use suitable drip pan to catch fuel spillage whenever any fuel line or fitting is loosened or removed.

2. Using ?/16 inch wrench, disconnect fuel input tube (C) from elbow (D).
3. Using 9/16 inch wrench, disconnect fuel return tube (E) from elbow (F).
4. Using 1/2 inch wrench, remove four nuts and washers (G).
5. Remove manifold heater (H) and gasket (J). Throw gasket away.

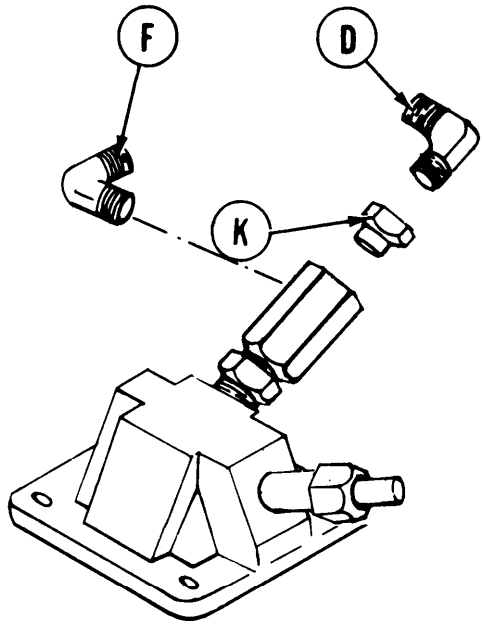

6. Using 7/1 6 inch wrench, remove elbow (F).
7. Using 1/2 inch wrench, remove elbow (D).
8. Using 9/16 inch wrench, remove bushing (K).
9. Inspect all items disconnected or removed for cracks, nicks, or other damage. Replace as necessary.

Go on to Sheet 3

TA248401

MANIFOLD HEATER (LEFT AND RIGHT) REPLACEMENT (Sheet 3 of 3)

INSTALLATION:

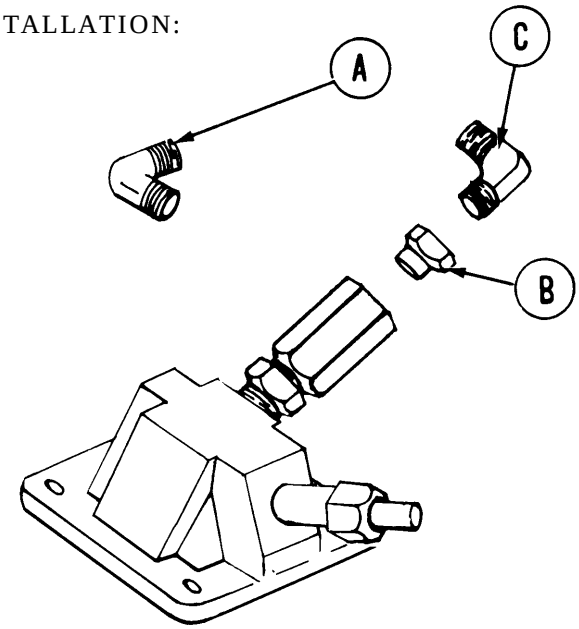

1. Install elbow (A). Using 7/16 inch wrench, tighten elbow.
2. Install bushing (B). Using 9/16 inch wrench, tighten bushing.
3. Install elbow (C). Using 1/2 inch wrench, tighten elbow.

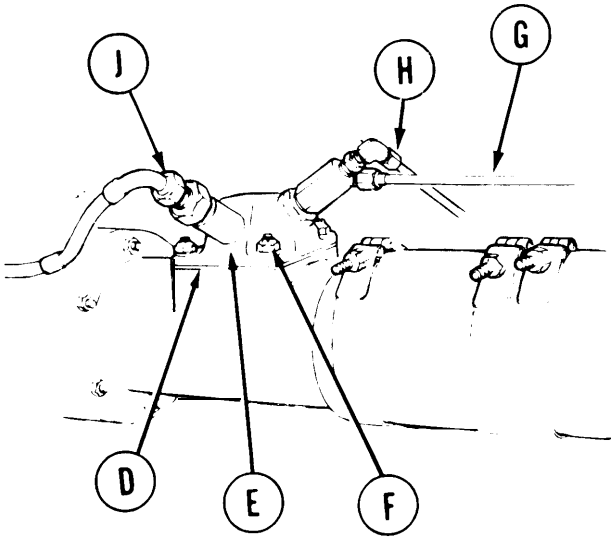

4. Position new gasket (D) and manifold heater (E) onto manifold.
5. Install four washers and new nuts (F) to secure manifold heater.
6. Using 1/2 inch open end wrench, tighten nuts (F).
7. Connect fuel return tube (G) to elbow (A). Using 9/16 inch open end wrench, tighten tube.
8. Connect fuel input tube (H) to elbow (C). Using 7/16 inch open end wrench, tighten tube.
9. Connect ignition lead (J) to spark plug. Using 3/4 inch open end wrench, tighten ignition lead.
10. Perform manifold heater operation check (page 7-288).
11. Install powerplant (page 5-14).

End of Task **TA248402**

MANIFOLD HEATER IGNITION COIL AND CABLE REPLACEMENT (Sheet 1 of 3)

TOOLS: 1/2 in. combination box and open end wrench
1/3 in. combination box and open end wrench
7/8 in. combination box and open end wrench
7/16 in. socket with 1/2 in. drive
1/2 in. socket with 1/2 in. drive
5 in. extension with 1/2 in. drive
Ratchet with 1/2 in. drive
Slip joint pliers

REFERENCE: TM 5-5420-202-10

PRELIMINARY PROCEDURE: Remove powerplant (page 5-2)

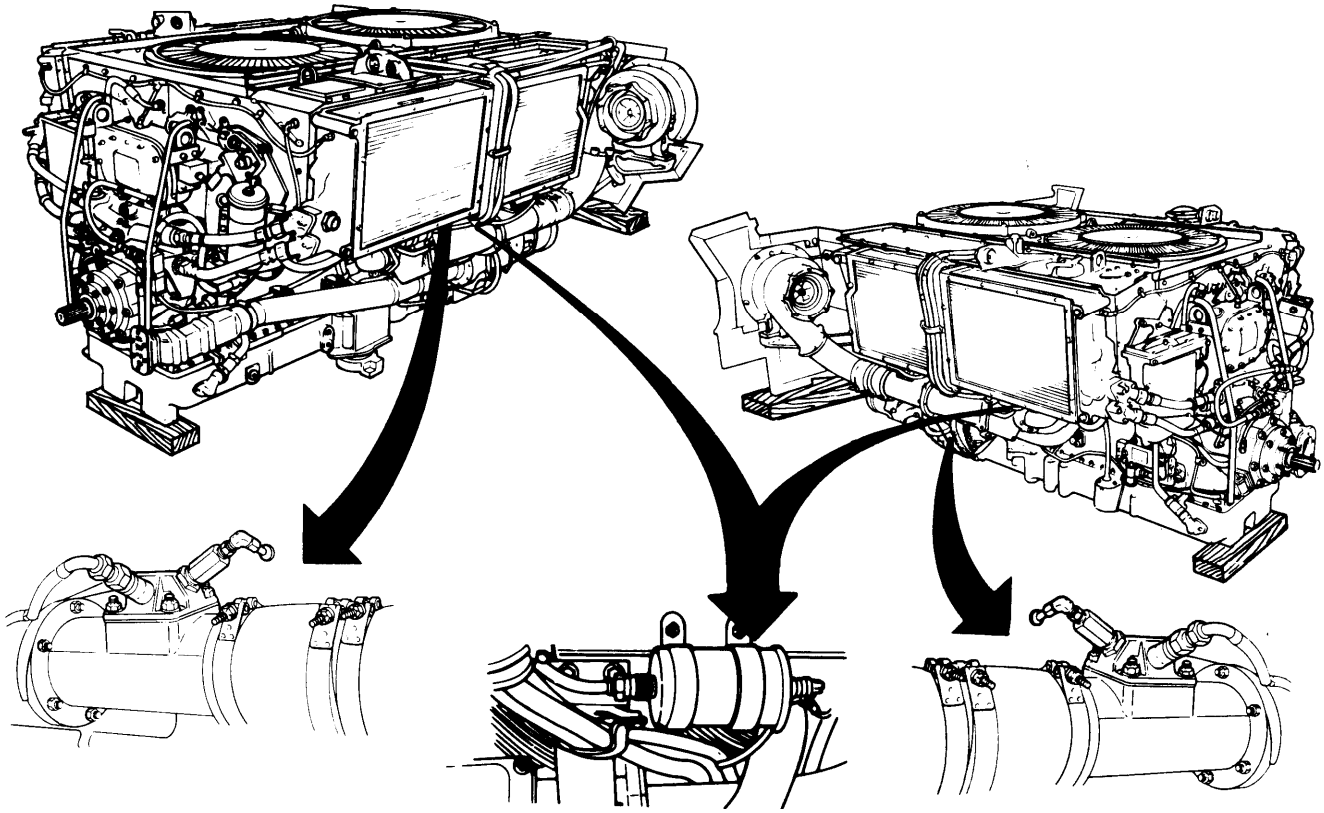

LEFT SIDE SHOWN

NOTE
Replacement instructions are the same for both sides. Therefore, only the left side is shown.

TA248403

Go on to Sheet 2

MANIFOLD HEATER IGNITION COIL AND CABLE REPLACEMENT (Sheet 2 of 3)

REMOVAL:

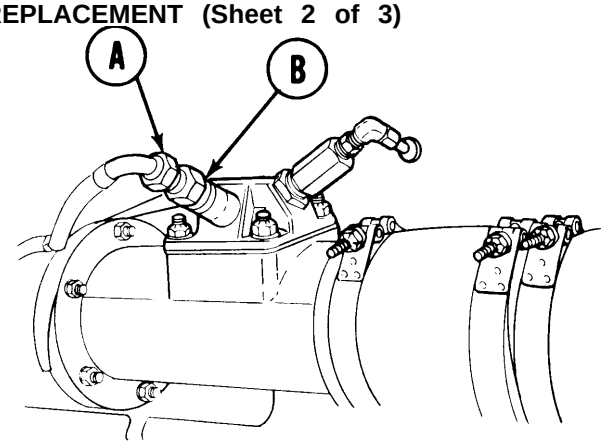

WARNING

Ignition coils on engine are capable of producing extremely high voltage. Output of this ignition system is sufficient to cause a dangerous electrical shock. Never touch any uncovered or live connections.

1. Using 3/4 inch wrench, disconnect cable (A) from spark plug (B).

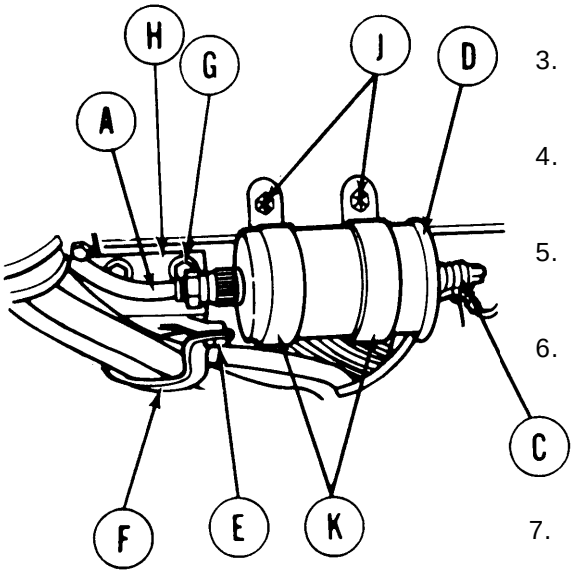

2. Using pliers, disconnect electrical connector (C) from coil (D).
3. Using 7/16 inch socket, remove two screws (E) and cable clamp (F).
4. Using 1/2 inch socket, extension, and 1/2 inch wrench, remove two screws (G) and cable bracket (H).
5. Using hands, put down pressure on coil (D) to give access to screws (J).
6. Using 1/2 inch socket and extension, remove two screws (J).
7. Remove coil (D), cable (A), and clamps (K) as a unit.
8. Remove clamps (K) from coil (D).
9. Using 7/8 inch wrench, disconnect cable (A) from coil (D).

INSPECTION:

1. Inspect clamps and coil for cracks or other damage.
2. Check continuity and insulation resistance of cable.
3. Replace faulty parts as required.

TA248404

MANIFOLD HEATER IGNITION COIL AND CABLE REPLACEMENT (Sheet 3 of 3)

INSTALLATION:

1. Position two clamps (A) onto coil (B).

2. Position coil (B) and clamps (A) on frame.

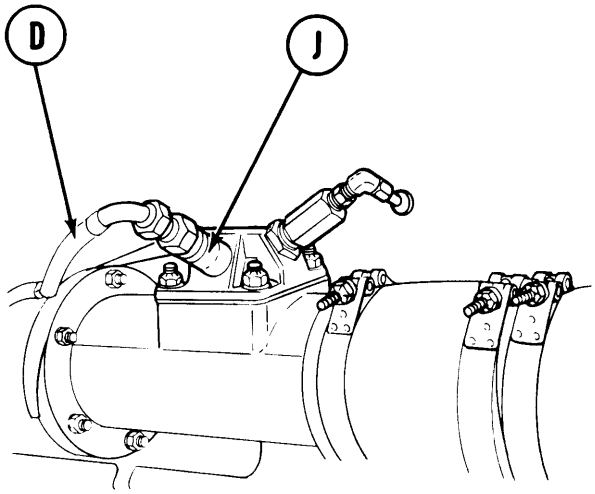

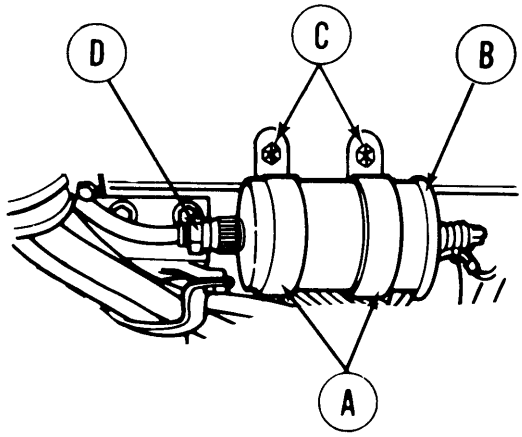

3. Install two screws (C) to secure clamps (A) to frame. Do not tighten.

4. Connect cable (D) to coil (B).

5. Using 7/8 inch wrench, tighten cable (D) connector.

6. Using 1/2 inch socket, extension, and 1/2 inch wrench, install two screws (E) to hold bracket (F) to frame.

7. Using 7/16 inch socket, install two screws (G) and clamp (H) to bracket (F).

8. Route cable (D) over bracket and connect to spark plug (J).

9. Using 3/4 inch wrench, tighten cable (D).

10. Using 1/2 inch socket and extension, tighten screws (C).

11. Alining keyway, connect electrical connector (K) to coil (B).

12. Using pliers, tighten electrical connector (K).

13. Perform manifold heater operational check (page 7-288).

14. Install powerplant (page 5-14).

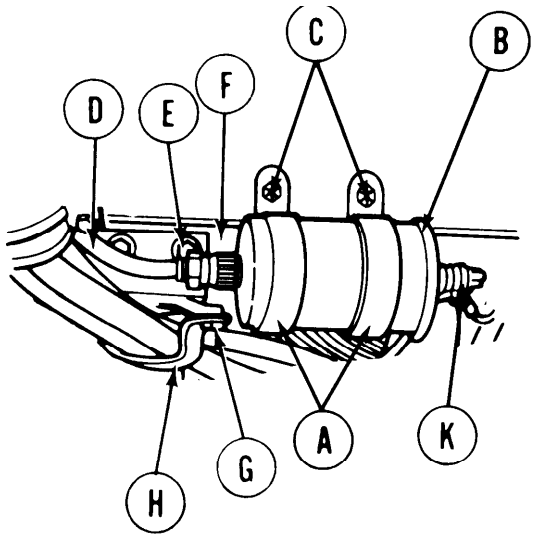

End of Task

TA248405

MANIFOLD HEATER FUEL RETURN SOLENOID VALVE REPLACEMENT (Sheet 1 of 5)

PROCEDURE INDEX

PROCEDURE	PAGE
Removal	7-282
Inspection	7-284
Installation	7-295

TOOLS: 5/16 in. combination box and open end wrench
1/2 in. combination box and open end wrench
9/16 in. combination box and open end wrench
1/2 in. socket with 1/2 in. drive
5 in. extension with 1/2 in. drive
Slip joint pliers
Ratchet with 1/2 in. drive

SUPPLIES: Container
Rags (Item 12, Appendix D)
Sealing compound (Item 28, Appendix D)

REFERENCE: TM 5-5420-202-10

PRELIMINARY PROCEDURE: Remove engine shroud (page 9-30)

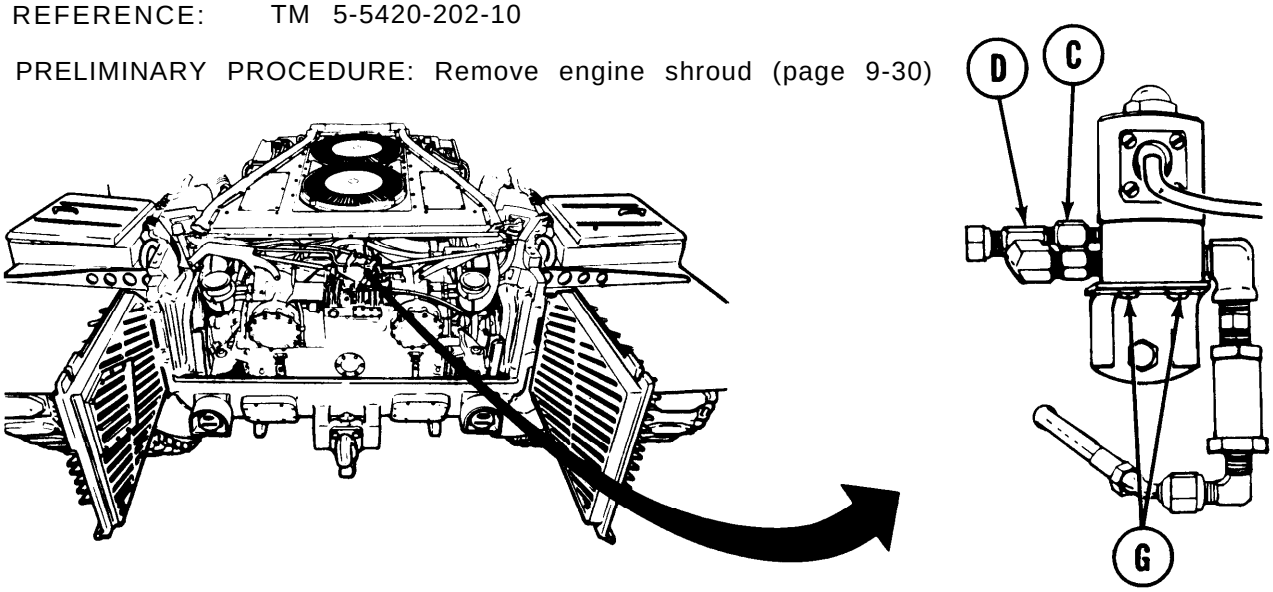

NOTE

Use suitable container to catch any fuel that may leak out whenever any part of fuel system is loosened or disconnected.

Go on to Sheet 2

TA248406

MANIFOLD HEATER FUEL RETURN SOLENOID VALVE REPLACEMENT (Sheet 2 of 5)

REMOVAL:

1. Using pliers, disconnect electrical connector (A) from solenoid valve (B).
2. Using 9/16 inch wrench, disconnect two fuel lines (C) from tee (D).
3. Using 9/16 inch wrench, disconnect hose assembly (E) from elbow (F).
4. Using 5/16 inch wrench, remove two screws and washers (G) securing solenoid valve (B) to bracket (H).
5. Remove solenoid valve (B) and fittings as a unit.

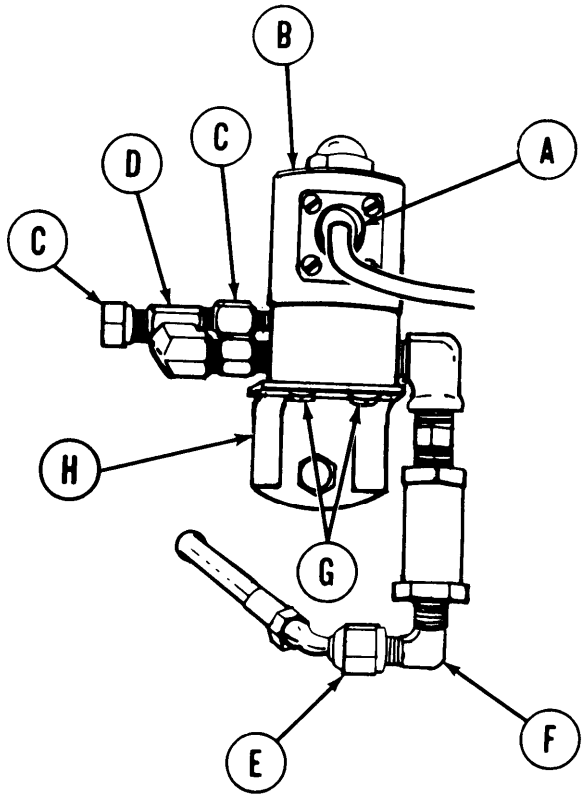

Go on to Sheet 3

TA248407

MANIFOLD HEATER FUEL RETURN SOLENOID VALVE REPLACEMENT (Sheet 3 of 5)

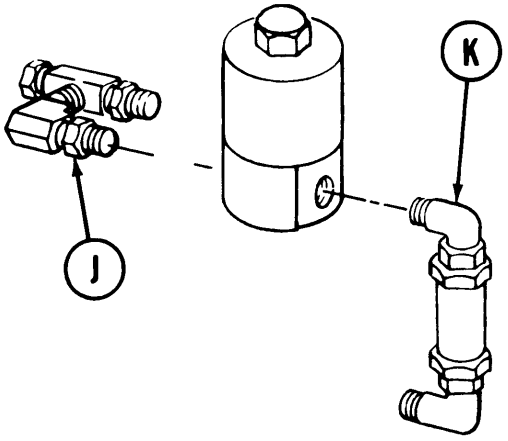

6. Using 1/2 inch wrench, remove coupling (J) with elbow and tee attached.

7. Using 9/16 inch wrench, remove elbow (K) with nipple, check valve, and elbow attached.

8. Using 1/2 inch wrench, socket, and extension, remove three screws (L) securing bracket (H) to shroud.

9. Remove bracket (H).

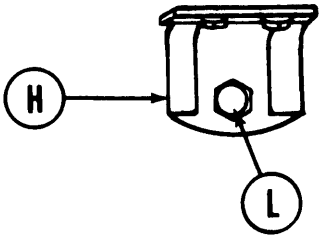

INSPECTION:

Inspect all items disconnected or removed. Replace defective parts as necessary.

Go on to Sheet 4

TA248408

MANIFOLD HEATER FUEL RETURN SOLENOID VALVE REPLACEMENT (Sheet 4 of 5)

INSTALLATION:

NOTE

Coat all male threads of fittings with sealing compound before installation.

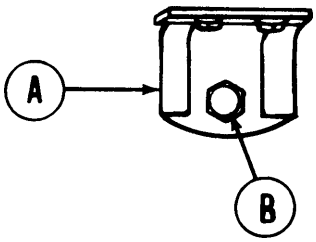

1. Position bracket (A) in place on shroud.

2. Using 1/2 inch wrench, socket, and extension, install three screws (B) to secure bracket to shroud.

3. Using 9/1 6 inch wrench, install elbow with nipple, check valve, and elbow (C) as a unit on solenoid valve (D).

4. Using 1/2 inch wrench, install coupling with elbow and tee (E) on solenoid valve (D).

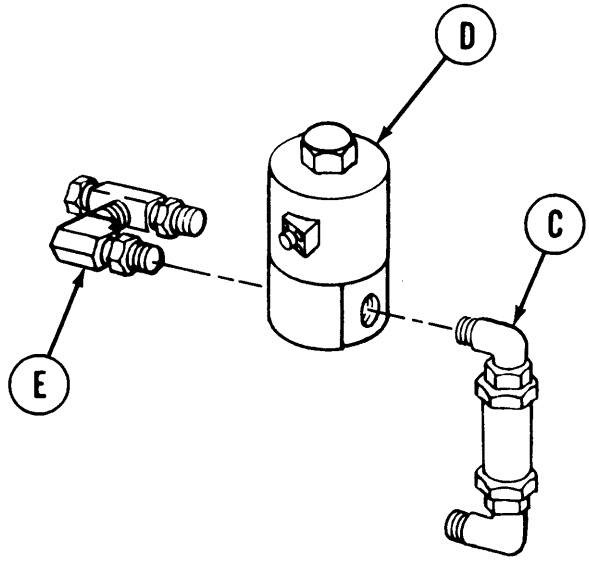

Go on to Sheet 5

TA248409

MANIFOLD HEATER FUEL RETURN SOLENOID VALVE REPLACEMENT (Sheet 5 of 5)

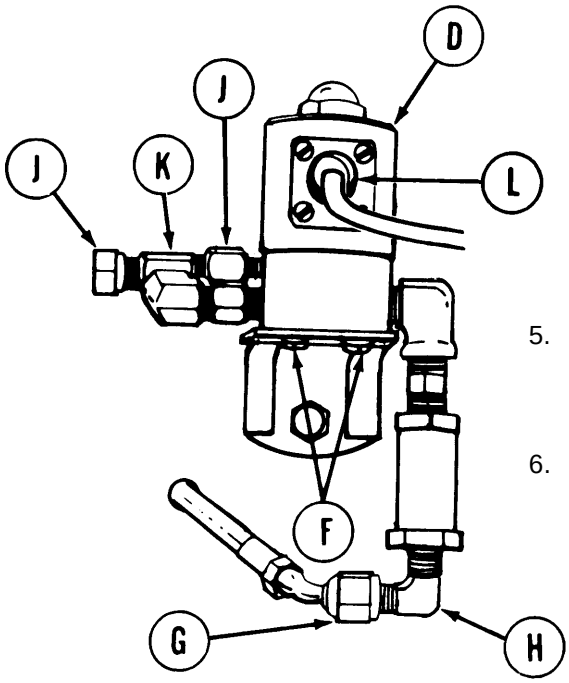

5. Place solenoid valve (D) with fittings on bracket. Position solenoid valve so the electrical connector is facing rearward.

6. Using 5/16 inch wrench, install two screws and washers (F) to secure solenoid valve (D) to bracket.

7. Connect hose assembly (G) to elbow (H). using 9/16 inch wrench, tighten hose assembly (G) to elbow (H).

8. Connect two fuel lines (J) to tee (K). Using 9/16 inch wrench, tighten fuel lines (J) to tee (K).

9. Using pliers, install electrical connector (L) to valve.

10. Operate primer (purge) pump (TM 5-5420-226-10). Check for leaks. If leaks are found, correct as necessary.

11. Install engine shroud (page 9-31).

End of Task

TA248410

MANIFOLD HEATER SPARK PLUG REPLACEMENT (Sheet 1 of 1)

TOOLS: 3/4 in. combination box and open end wrench
7/8 in. combination box and open end wrench
Feeler gage

PRELIMINARY PROCEDURE: Remove powerplant (page 5-2)

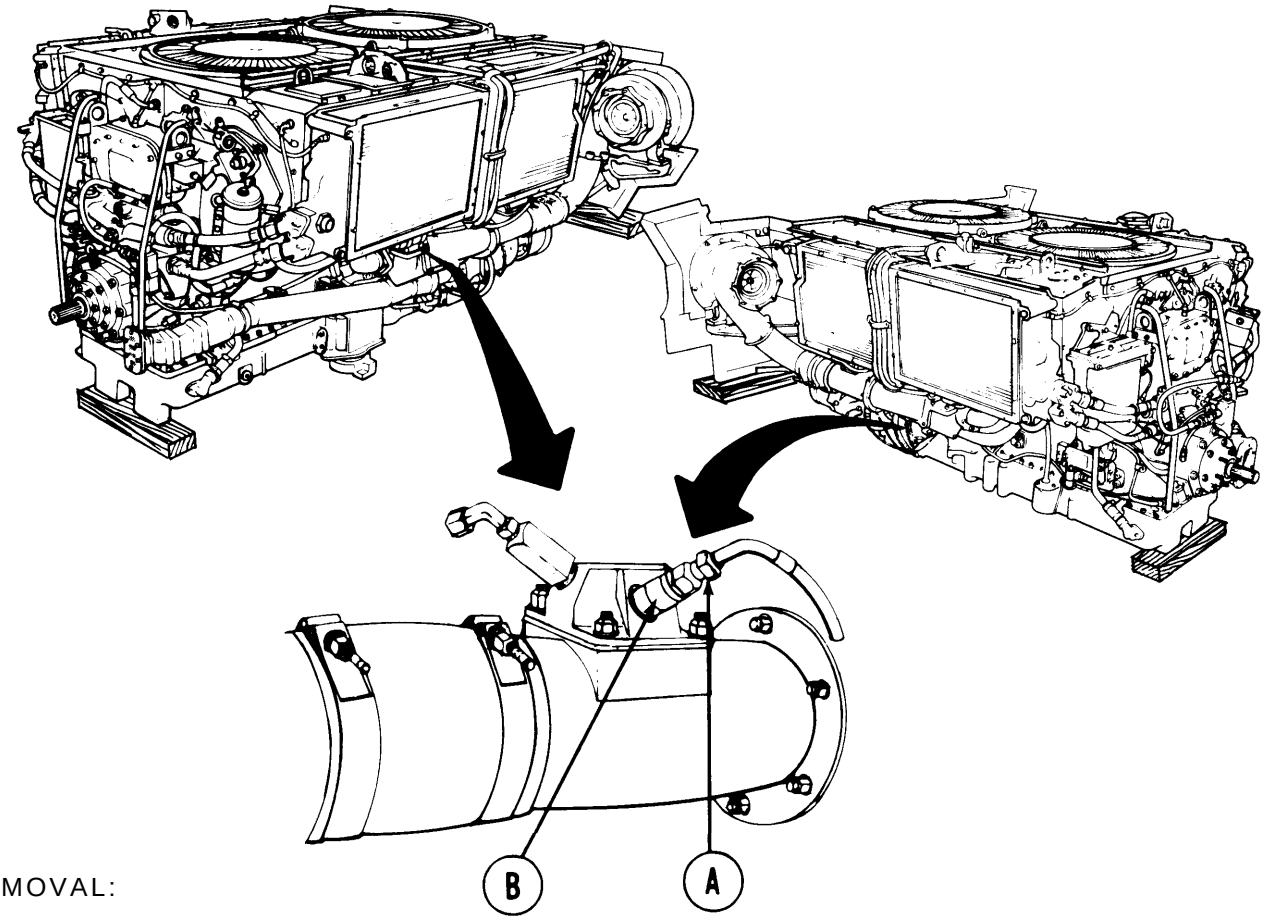

REMOVAL:

1. Using 3/4 inch wrench, disconnect ignition cable (A) from spark plug (B).
2. Using 7/8 inch wrench, remove spark plug (B) with gasket.

INSTALLATION:

1. Using feeler gage, set spark plug gap at 0.097 inch (-0.003 or +0.017).
2. Using 7/8 inch wrench, install spark plug (B) and gasket.
3. Connect ignition cable (A) to spark plug (B). Using 3/4 inch wrench, tighten ignition cable (A) to spark plug (B).
4. Perform manifold heater operational check (page 7-288).
5. Install powerplant (page 5-14).

End of Task

TA248411

MANIFOLD HEATER OPERATIONAL CHECK (Sheet 1 of 2)

PERSONNEL: Two

PRELIMINARY PROCEDURE: Remove powerplant (page 5-2)

OPERATIONAL CHECK:

NOTE

Make this check after any part of manifold heater system is replaced. It requires two persons to complete.

1. Prepare engine for powerplant test run (page 5-25).
2. Station one person on side of engine where maintenance was performed, with his hand on intake manifold heater tube (A).

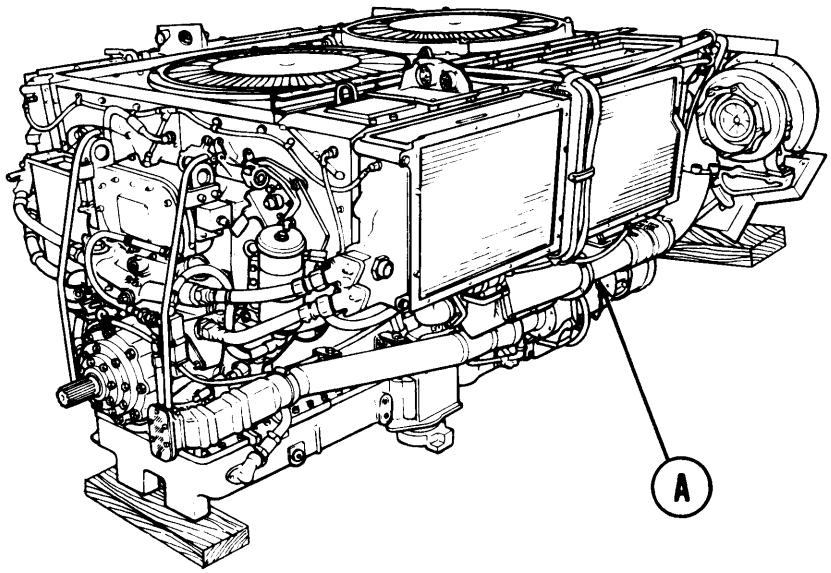

Go on to Sheet 2

TA248412

MANIFOLD HEATER OPERATIONAL CHECK (Sheet 2 of 2)

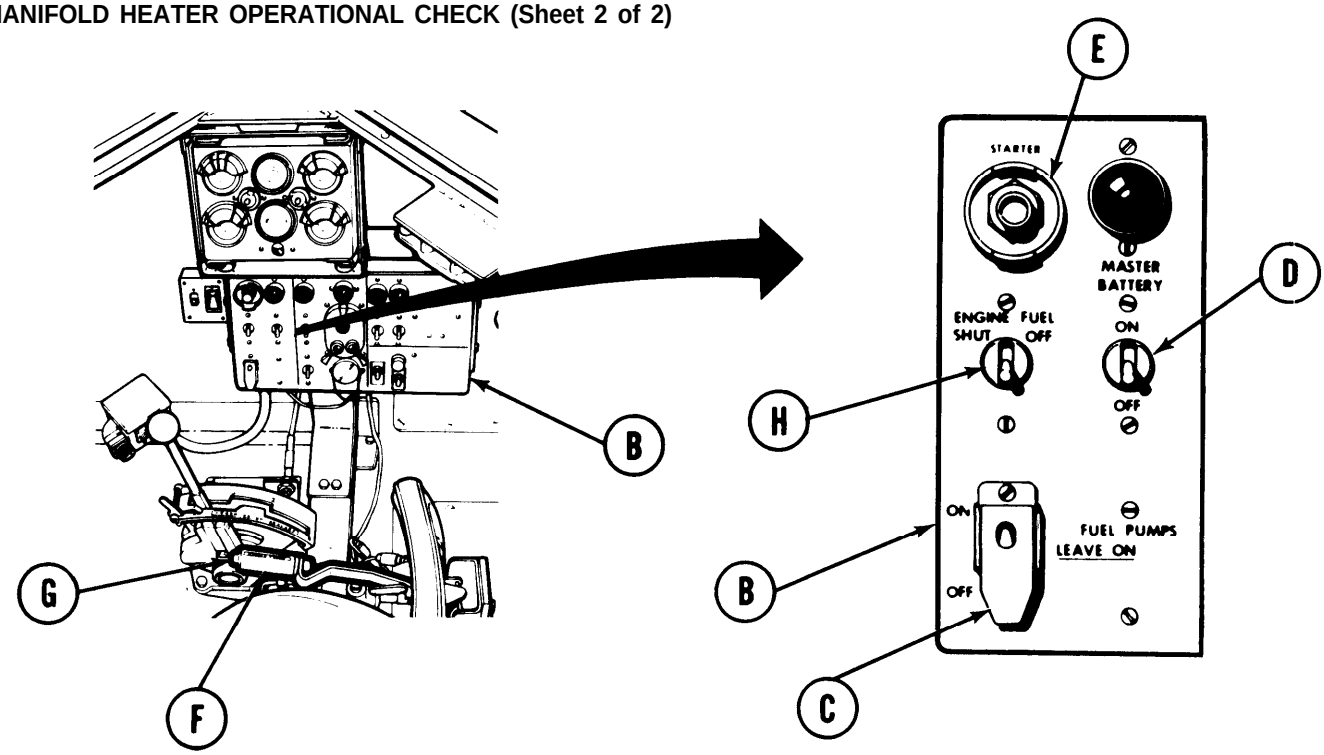

3. At driver's station on master control panel (B) set FUEL PUMPS switch (C) to OFF (down) and MASTER BATTERY switch (D) to ON (up).

4. Press STARTER BUTTON (E) and at same time operate purge pump handle (F) while pressing heater button (G) on end of handle.

5. Check system for leaks. Correct as necessary. When no leaks are present continue with step 4 and 6.

6. Check that heater is operating. Heat will be felt at intake manifold heater tube (A). If no heat is felt, troubleshoot and correct (page 4-1).

7. When checks are complete, stop operating purge pump handle (F). Hold ENGINE FUEL SHUTOFF switch (H) to OFF. Set MASTER BATTERY swtich to OFF (down).

8. Disconnect engine from powerplant test run hookup (page 5-40).

9. Install powerplant (page 5-14).

End of Task

TA248413

MANIFOLD HEATER FUEL RETURN HOSE ASSEMBLY REPLACEMENT (Sheet 1 of 4)

PROCEDURE INDEX

PROCEDURE	PAGE
Removal	7-290
Cleaning and Inspection	7-291
Installation	7-292

TOOLS: 7/16 in. combination box and open end wrench
9/16 in. combination box and open end wrench
7/8 in. combination box and open end wrench
Wire brush

SPECIAL TOOLS: Ground hop kit (Item 31, Chapter 3, Section I)

SUPPLIES: Bucket or drip pan
Rags (Item 12, Appendix D)

REFERENCE: TM 5-5420-202-10

PRELIMINARY PROCEDURES: Remove powerplant (page 5-2)
Remove engine shroud (page 9-30)
Remove rear cooling fan (page 9-55)

REMOVAL:

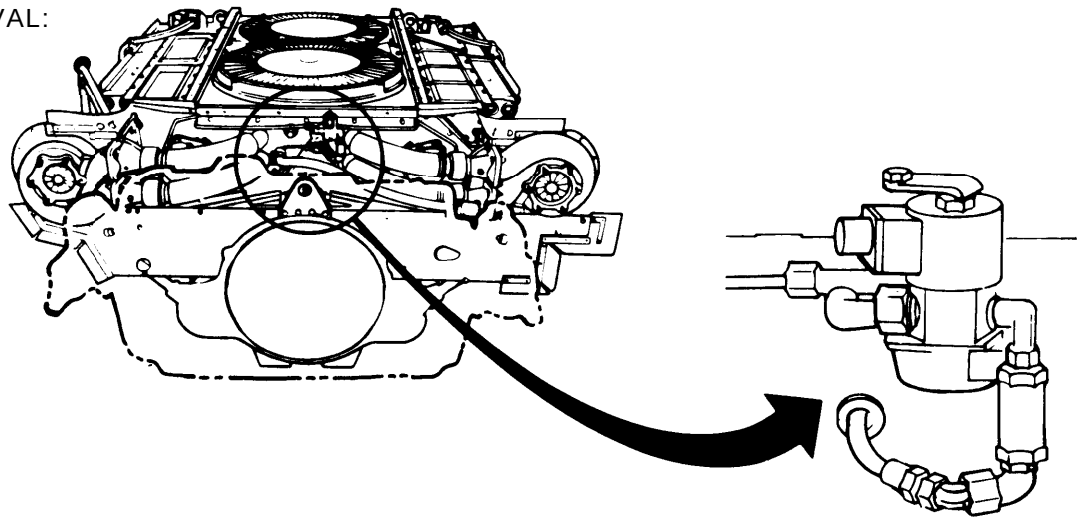

CAUTION

When removing or installing fuel lines or hoses, care must be taken not to damage fittings and threads or twist or distort fuel lines or hoses.

Go on to Sheet 2

TA248414

MANIFOLD HEATER FUEL RETURN HOSE ASSEMBLY REPLACEMENT (Sheet 2 of 4)

NOTE

Use suitable container to catch fuel whenever any fuel line or connection is loosened or disconnected. Use cloth to wipe any spillage. Discard cloth and drained fuel in accordance with local procedures.

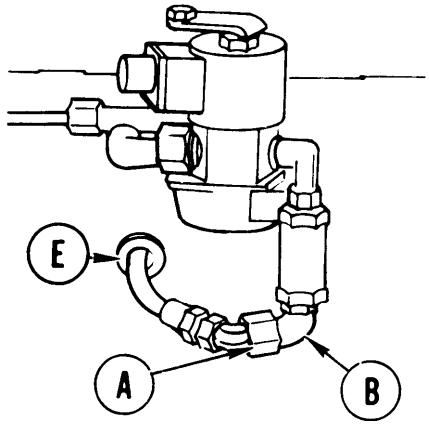

1. Using 7/16 inch and 9/16 inch wrenches, disconnect hose assembly (A) from elbow (B).

2. Using 7/8 inch wrench, disconnect hose assembly (C).

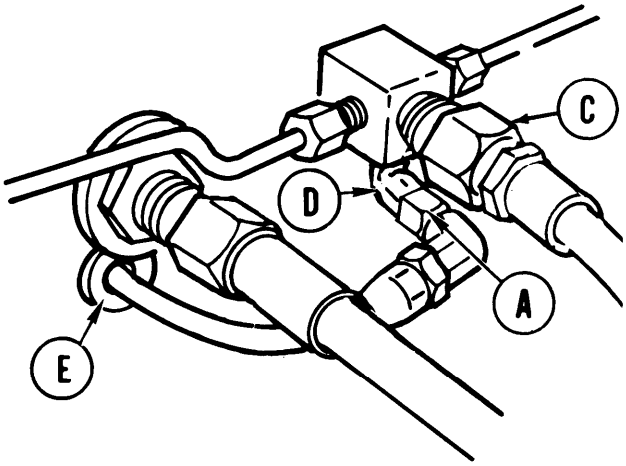

3. Using 7/16 inch and 9/16 inch wrenches, disconnect hose assembly (A) from elbow (D) on engine side of shroud support.

4. Remove grommet (E) from shroud support and from hose assembly (A).

5. Pull hose assembly (A) from shroud support.

CLEANING AND INSPECTION:

1. Using wire brush, clean threaded parts.

2. Inspect all hoses and fittings and replace as necessary.

Go on to Sheet 3

TA248415

MANIFOLD HEATER FUEL RETURN HOSE ASSEMBLY REPLACEMENT (Sheet 3 of 4)

INSTALLATION:

1. Position hose assembly (A) through shroud. Be sure that end with 90-degree bend is on engine side of shroud.

2. Install grommet (B) onto hose assembly and position grommet in opening in shroud support.

3. Connect hose assembly (A) to elbow (C).

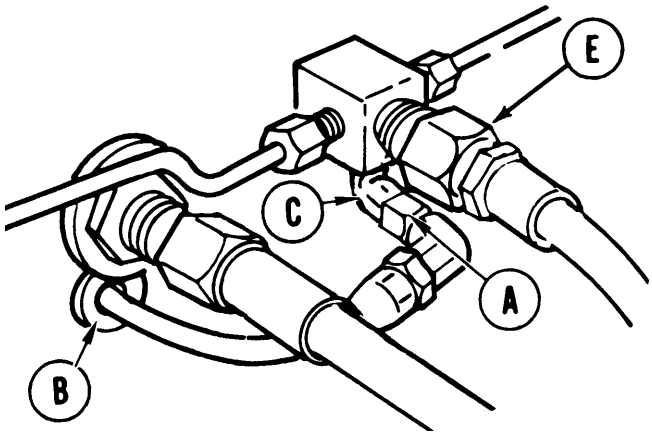

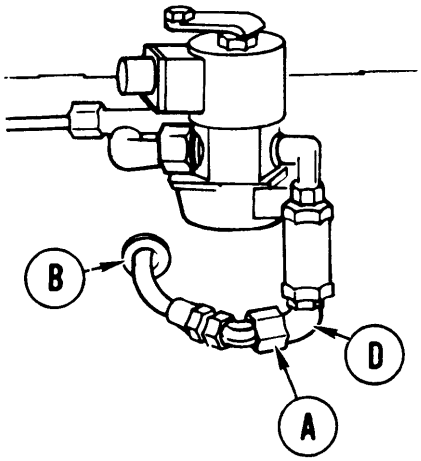

4. Connect hose assembly (A) to elbow (D).

5. Using 7/16 inch and 9/16 inch wrenches, tighten hose assembly (A) to elbows (C) and (D).

6. Using 7/8 inch wrench, install hose assembly (E).

Go on to Sheet 4

TA248416

MANIFOLD HEATER FUEL RETURN HOSE ASSEMBLY REPLACEMENT (Sheet 4 of 4)

7. Connect for powerplant test run (ground hop test) (page 5-27) outside of hull. DO NOT start engine.

8. Operate purge pump (TM 5-5420-202-10) and check for leaks. If leaks are found, tighten connections as required.

9. Disconnect powerplant ground hop kit (page 5-40).

10. Install rear cooling fan (page 9-57).

11. Install engine shroud (page 9-31).

12. Install powerplant (page 5-14).

End of Task

ENGINE FUEL RETURN TUBE ASSEMBLY REPLACEMENT (Sheet 1 of 3)

TOOLS: 7/16 in. open end wrench (2 required)
1 in. open end wrench
1-1/8 in. open end wrench (2 required)
9/16 in. socket with 1/2 in. drive
5 in extension with 1/2 in. drive
Ratchet with 1/2 in. drive

SUPPLIES: Rags (Item 65, Appendix D)
Drip pan
Lockwashers

PRELIMINARY PROCEDURE: Remove transmission shroud (page 9-2)

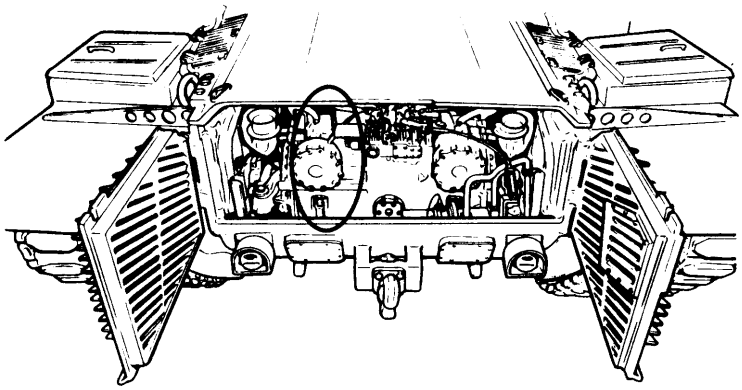

REMOVAL:

1. Position drip pan and rags to catch any spilled fuel.

Go on to Sheet 2

TA248417

ENGINE FUEL RETURN TUBE ASSEMBLY REPLACEMENT (Sheet 2 of 3)

2. Using two 1-1/8 inch wrenches, hold nut (A) while disconnecting nut (B).

3. Using 9/16 inch socket with extension, remove nut and lockwasher (C) holding clamp (D) to stud (E).

4. Using 1 inch wrench to hold hose assembly fitting (F), use 1-1/8 inch wrench to disconnect nut (G).

5. Using 7/16 inch wrench on nut (H) and other 7/16 inch wrench on screw (J), remove screw (J), washer (K), lockwasher (L), and clamp (M) from bracket (N).

6. Remove tube assembly (P).

7. Remove clamps (E) and (M) from tube assembly (P).

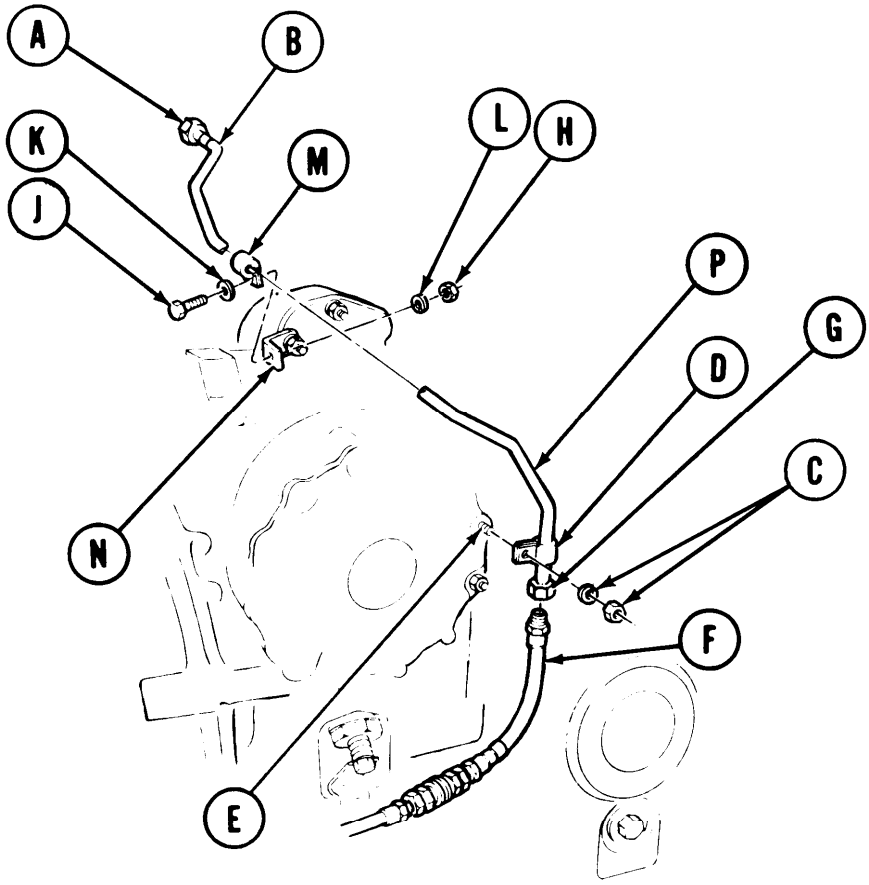

Go on to Sheet 3

TA248418

ENGINE FUEL RETURN TUBE ASSEMBLY REPLACEMENT (Sheet 3 of 3)

INSTALLATION:

1. Position tube assembly (A) in place. Using hands, install nuts (13) and (C) finger tight.

2. Position clamps (D) and (E) to tube assembly (A).

3. Position washer (F) onto screw (G). Place screw (G) through clamp (D) and, using 7/16 inch wrench, install lockwasher (H) and nut (J) onto screw (G), securing clamp (D) to bracket (K).

4. Using 7/16 inch wrench on screw (G) and other 7/16 inch wrench on nut (J), tighten assembled parts (G), (F), (D), (K), (H), and (J) together.

5. Position clamp (E) to stud (L) and install lockwasher (M).

6. Using 9/16 inch socket with extension, install nut (N) onto stud (L), securing clamp (F).

7. Using 1-1/8 inch wrench, tighten nut (B).

8. Using 1 inch wrench to hold fitting (P), use 1-1/8 inch wrench to tighten nut (C).

9. Install transmission shroud (page 9-6).

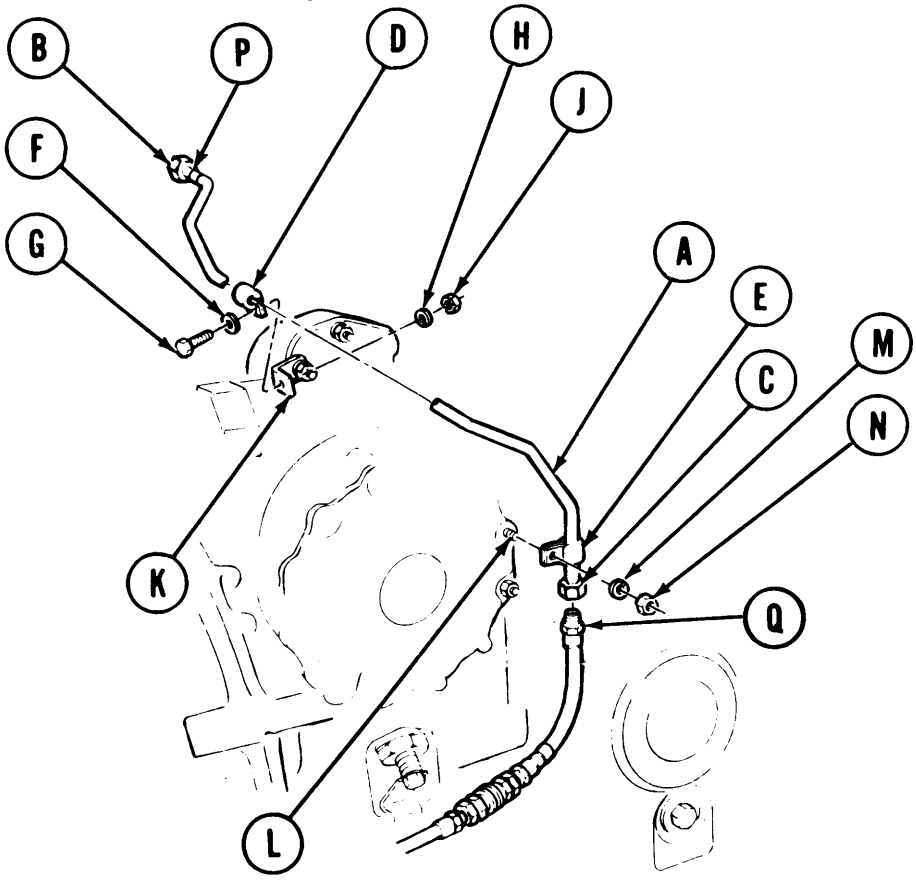

End of Task

TA248419

ENGINE IDLE ADJUSTMENT (Sheet 1 of 1)

TOOLS: 1/2 in. combination box and open end wrench
Flat-tip screwdriver

FABRICATED TOOLS: Throttle linkage adjusting go/no go gage (Figure F-3, Appendix F)

REFERENCE: TM 5-5420-202-10

PRELIMINARY PROCEDURES: Engage parking brake (TM 5-5420-202-10)
Remove upper engine access cover (page 17-11)
Block tracks to prevent vehicle movement (TM 5-5420-202-10)
Start engine, run at idle (TM 5-5420-202-10)

ADJUSTMENT:

1. Using 3/16 inch end of fabricated gage, measure distance between stop pin (A) and bracket shoulder (B).

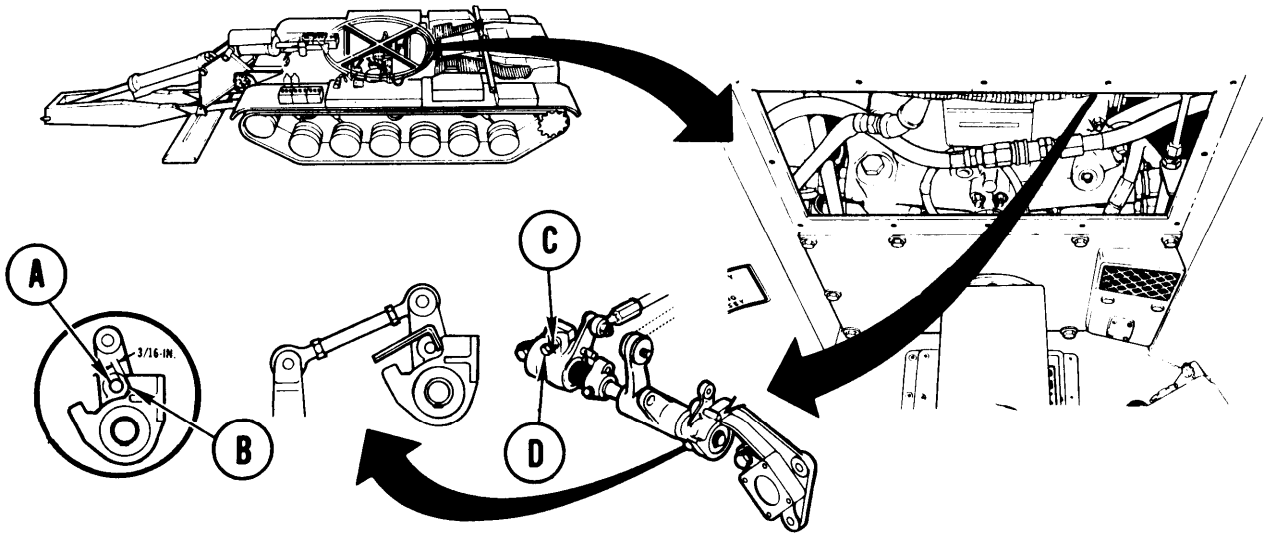

2. If distance is more than or less than 3/16 inch, use wrench and loosen jamnut (C) on idle adjustment screw (D).

3. Using screwdriver, turn screw (D) to the right to increase distance, and to the left to decrease distance.

4. Using wrench, tighten jamnut (C).

5. Check idle speed. If it is not between 700-750 rpm (shown on tachometer), notify support maintenance.

6. Stop engine (TM 5-5420-202-10).

7. Install upper engine access cover (page 17-12).

End of Task

TA248420

ACCELERATOR PEDAL RETURN SPRING ADJUSTMENT (Sheet 1 of 2)

TOOLS: 7/16 in. combination box and open end wrench
Spring scale

REFERENCE: TM 5-5420-202-10

PRELIMINARY PROCEDURES: Remove operators floor access plate (page 17-8)
Place shift lever in P (park) position (TM 5-5420-202-10)
Disconnect accelerator linkage at powerplant (page 7-322)

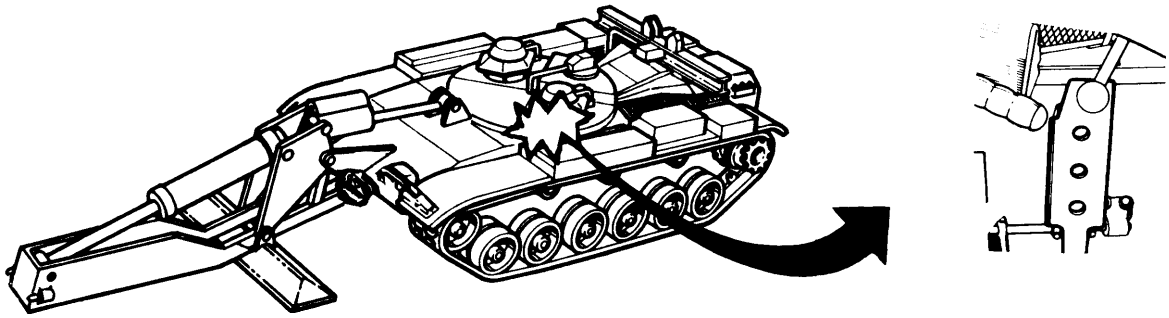

ADJUSTMENT:

1. Using spring scale (A) in hole (B) as shown from behind, check pressure required to depress accelerator pedal (C).

2. Scale should read between 7 and 8 pounds. If reading is within limits, omit steps 3 through 12 and perform step 13. If not within limits, perform step 3 or 4.

3. If scale reads more than 8 pounds, perform steps 5 through 8.

4. If scale reads less than 7 pounds, perform steps 9 through 12.

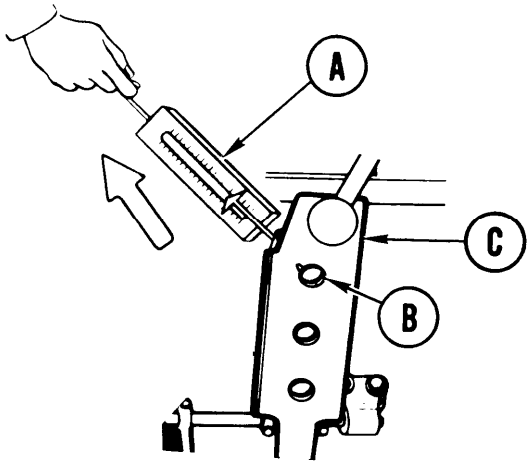

Go on to Sheet 2

TA248421

ACCELERATOR PEDAL RETURN SPRING ADJUSTMENT (Sheet 2 of 2)

5. Hold clamp (D) and loosen screw (E).
6. Move clamp (D) slightly toward rear of vehicle.
7. Using wrench, tighten screw (E).

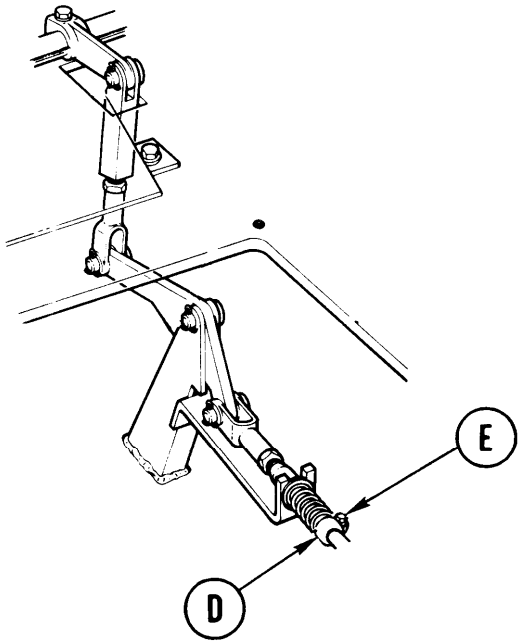

8. Repeat steps 1 and 2.
9. Hold clamp(D) and loosen screw (E).
10. Move clamp (D) slightly toward front of vehicle.
11. Using wrench, tighten screw (E).
12. Repeat steps 1 and 2.
13. Connect accelerator linkage at powerplant (page 7-323).
14. Install operators floor access plate (page 17-8).

End of Task

TA248422

ACCELERATOR LINKAGE ADJUSTMENT (Sheet 1 of 6)

TOOLS: 7/16 in. combination box and open end wrench
1/2 in. combination box and open end wrench (2 required)
9/16 in. combination box and open end wrench (2 required)
Long round nose pliers
Flashlight

FABRICATED TOOLS: Throttle linkage adjusting go/no-go gage (Figure F-3, Appendix F)

SUPPLIES: 1/8 in. dia. by 2 in. by 4 in. long locating pins (2 required)
1/16 in. dia. by 2 in. long pin
Cotter pins (4 required)

PERSONNEL: Two

REFERENCE: TM 5-5420-202-10

PRELIMINARY PROCEDURES: Remove operator's floor access plate (page 17-8)
Place shift lever in P (park) position (TM 5-5420-202-10)
Block tracks to prevent tank movement (TM 5-5420-202-10)
Remove upper engine access cover (page 17-11)

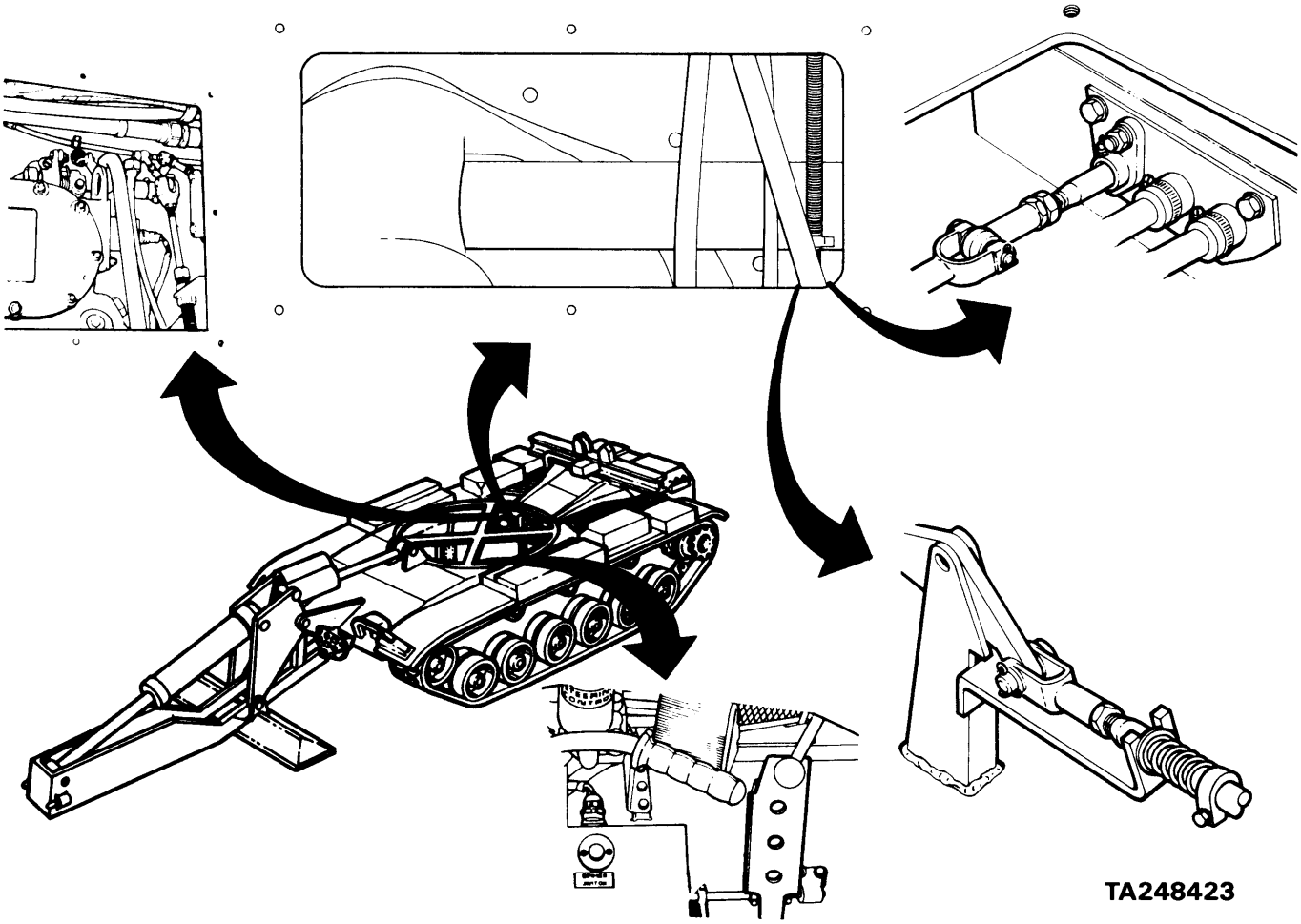

ACCELERATOR LINKAGE ADJUSTMENT (Sheet 2 of 6)

ADJUSTMENT:

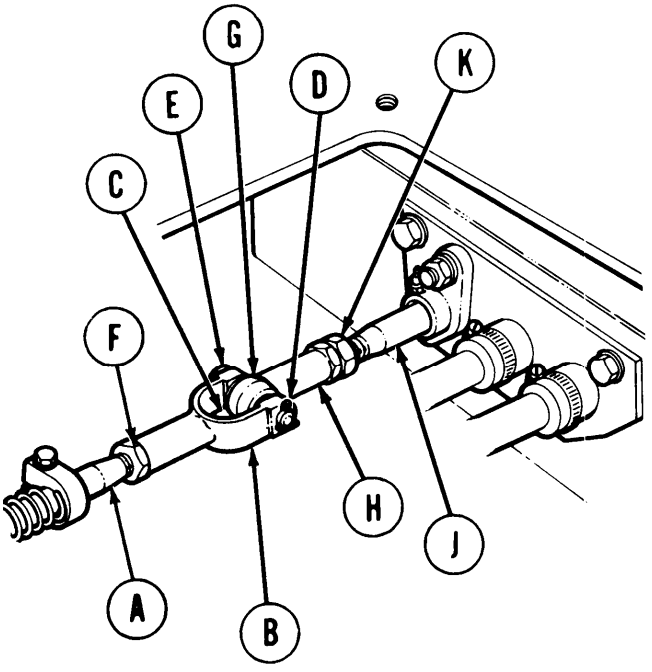

1. Check to see that threaded shaft (A) is flush with inside of clevis (B) at location (C). If threaded shaft is not flush, continue with step 2. If threaded shaft is flush, skip steps 2 through 4 and continue with step 5.

2. Using pliers, remove cotter pin (D) and pin (E)

3. Using 9/16 inch wrench to hold clevis (B), use 1/2 inch wrench to loosen nut (F) and adjust clevis (B) so that shaft is flush with clevis.

4. Using 9/16 inch wrench to hold clevis (B), use 1/2 inch wrench to tighten nut (F).

5. Insert 1/16 inch diameter pin at location (G) in rod end bearing (H) to be sure that threads of tube assembly (J) go into rod end bearing beyond location (G). If tube assembly is not inserted beyond location (G), go to steps 6 and 7. If tube assembly is inserted beyond location (G), go to step 8.

6. Using 7/16 inch wrench to hold rod end bearing (H) (on flats) and 1/2 inch wrench to loosen nut (K), adjust rod end bearing as stated in step 5.

7. Using 7/16 inch wrench to hold rod end bearing (H) (on flats), use 1/2 inch wrench to tighten nut (K).

NOTE

Rod end bearing (H) or clevis (B) may be pulled in order to insert pin (E).

8. Insert pin (E) and, using pliers, install cotter pin (D).

Go on to Sheet 3

TA248424

ACCELERATOR LINKAGE ADJUSTMENT (Sheet 3 of 6)

9. Insert 1/8 inch diameter locating pin (L) through alinement hole of remote control lever (M). If locating pin cannot be inserted, perform steps 10 through 15. If locating pin can be inserted, skip steps 10 through 15 and go to step 16.

10. Using 7/16 inch wrench to hold rod end bearing (N) (on flats), use 1/2 inch wrench to loosen nut (P).

11. Using 7/16 inch wrench, remove screw (Q).

12. Insert locating pin (L) through alinement hole into housing (R).

NOTE

If rod end bearing (N) cannot be adjusted short enough for screw (Q) to slip freely through lever (M), push rod end bearing (N) forward and insert screw (Q).

13. Turn rod end bearing (N) until screw (Q) slips freely through remote control lever (M) and rod end bearing (N).

14. Using 7/16 inch wrench to hold rod end bearing (N), tighten nut (P).

15. Using 7/16 inch wrench, tighten screw (Q).

16. Remove locating pin (L).

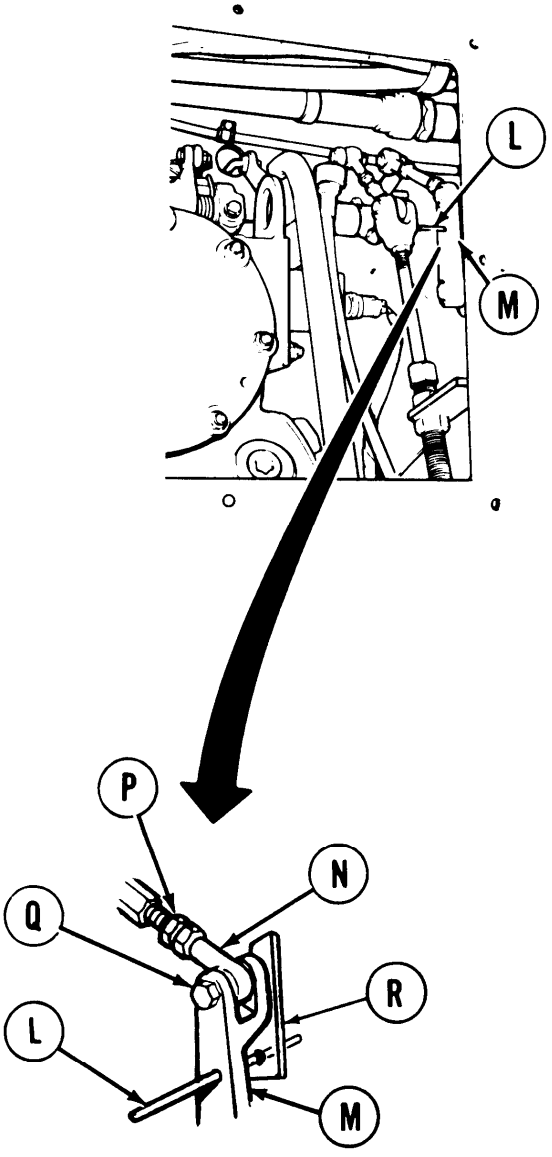

Go on to Sheet 4

TA248425

ACCELERATOR LINKAGE ADJUSTMENT (Sheet 4 of 6)

17. Have one technician in driver's station ready to start engine and watch tachometer while the other technician measures accelerator travel at engine.

18. Start engine (TM 5-5420-202-10).

19. Using fabricated go/no-go gage (S), measure for at least 1/8 inch and not more than 3/16 inch clearance at idle speed (700-750 rpm). If adjustment is necessary, perform steps 20 and 21. If adjustment is not necessary, skip steps 20 and 21 and go on to step 22.

20. Using 1/2 inch wrench, loosen nut (T). Adjust idle adjustment screw (U) to the requirements of step 19. If requirements are met, go to step 22. If requirements cannot be met, notify support maintenance.

21. Using 1/2 inch wrench, hold idle adjustment screw (U). Using 1/2 inch wrench, tighten nut (T).

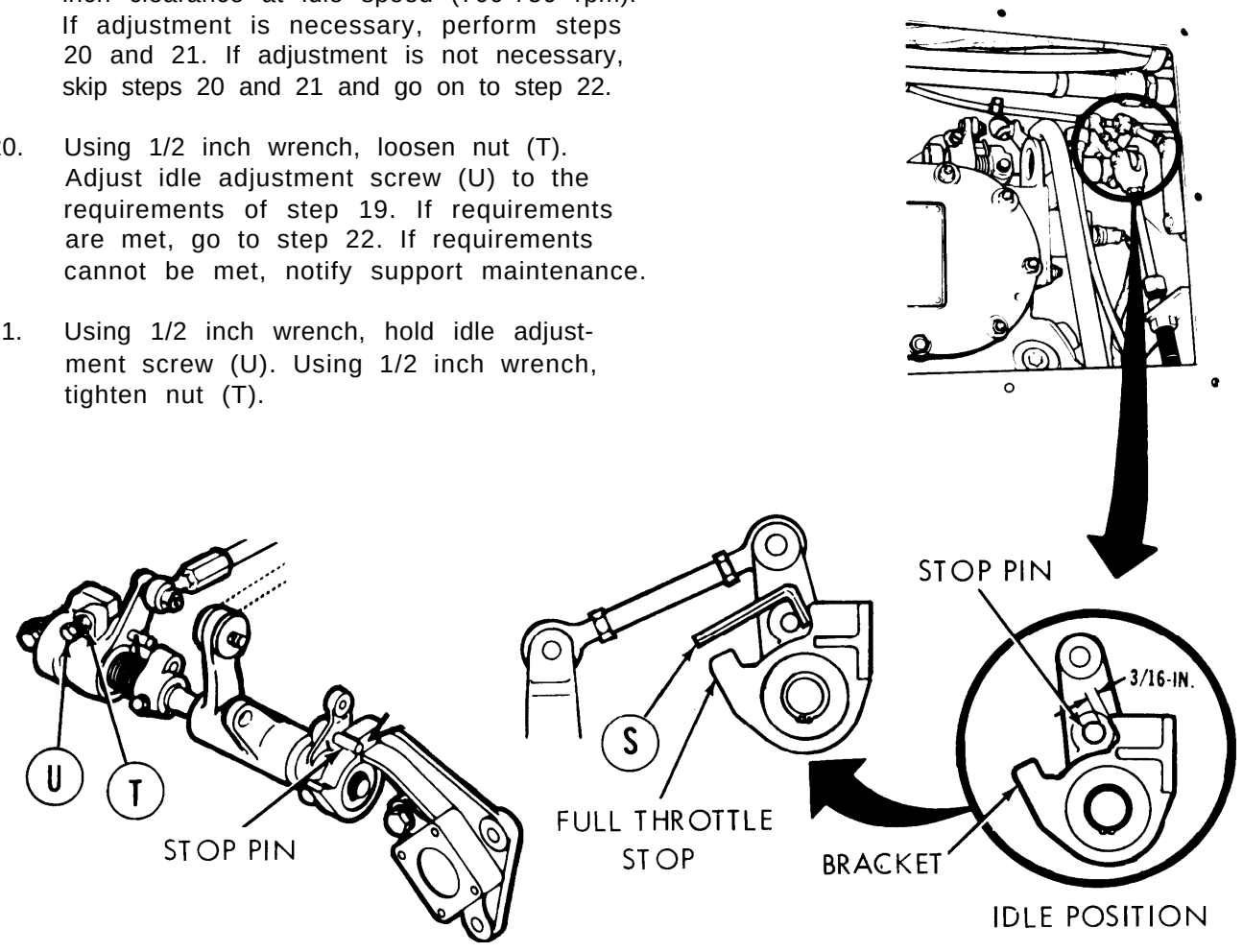

Go on to Sheet 5

TA248426

ACCELERATOR LINKAGE ADJUSTMENT (Sheet 5 of 6)

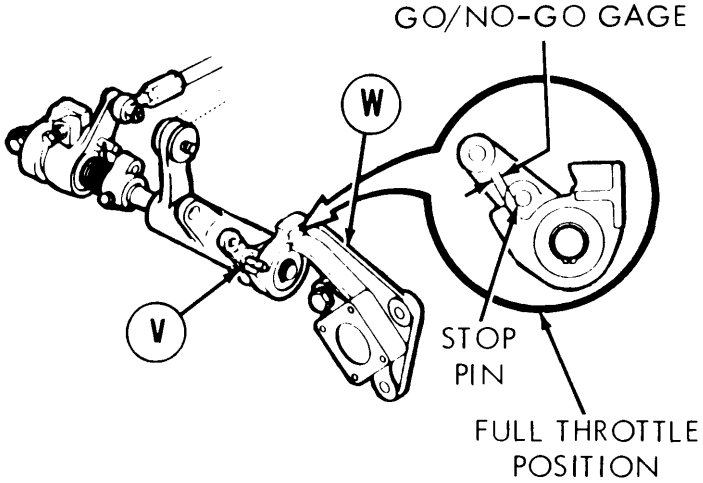

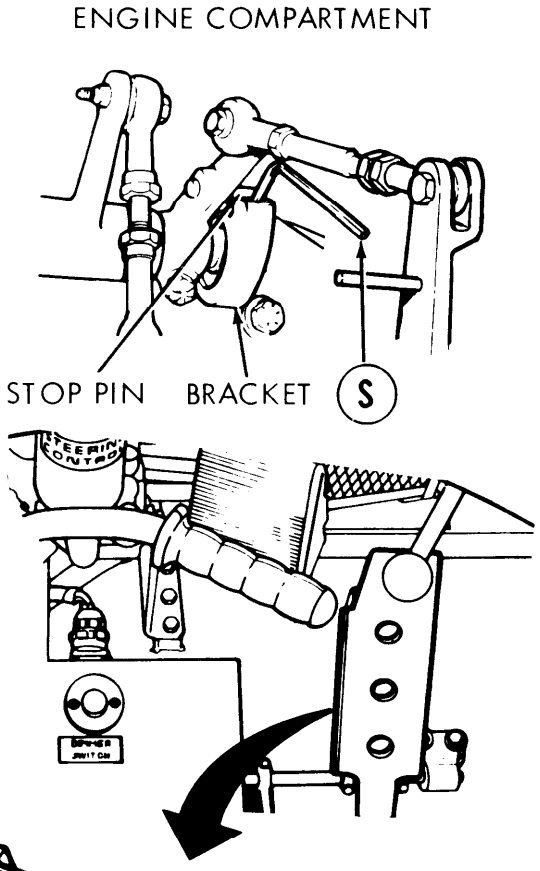

22. Stop engine (TM 5-5420-202-10).

23. Insert either end of go/no-go gage .(S) between stop pin (V) and bracket (W). Hold in this position while technician in driver's station presses pedal to full throttle position.

24. With pedal in full throttle position, screw (X) must contact floor and stop pin must contact either end of go/no-go gage (S). If this requirement cannot be met, do steps 25 and 26. If requirement is met, skip steps 25 and 26 and go to step 27.

25. Using two 9/16 inch wrenches, loosen nut (Y) and screw (X) on back side of accelerator pedal (Z).

26. Using two 9/16 inch wrenches, hold screw (X) and tighten nut (Y).

27. Holding pedal down (full throttle position), turn screw out until it is against floor. It may be necessary to press pedal down, raise and adjust, press it down again, raise and adjust several times.

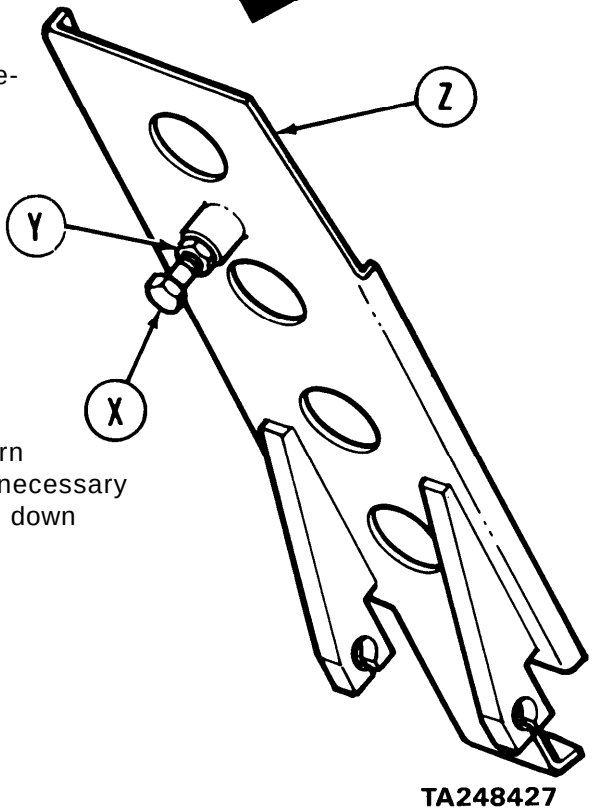

TA248427

Go on to Sheet 6

ACCELERATOR LINKAGE ADJUSTMENT (Sheet 6 of 6)

28. Start engine (TM 5-5420-202-10).

29. Press accelerator pedal down to floor. Tachometer should read between 2550-2650 rpm. If engine will not accelerate to within 2550-2650 rpm, shut down engine (TM 5-5420-202-10). Go back and do steps 25 through 29. If engine does accelerate to between 2550-2650 rpm, go to step 30.

30. Stop engine (TM 5-5420-202-10).

31. Install upper engine access cover (page 17-12).

32. Install operator's floor access plate (page 17-8).

33. Remove blocks from track (TM 5-5420-202-10).

End of Task

ACCELERATOR PEDAL ASSEMBLY REPLACEMENT (Sheet 1 of 2)

TOOLS: 9/16 in. combination wrench (2 required)

SUPPLIES: Clean rags (Item 12, Appendix D)
Dry cleaning solvent (Item 55, Appendix D)

PRELIMINARY PROCEDURES: Remove throttle control assembly (page 7-313)
Remove accelerator control rod (page 7-308)

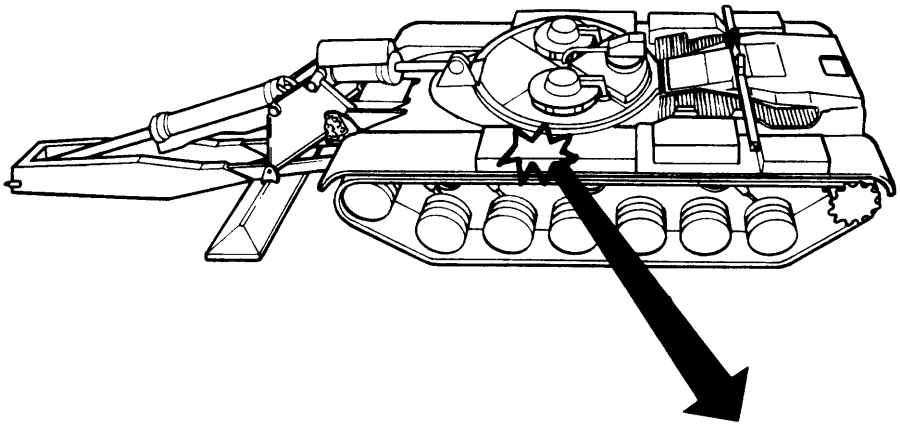

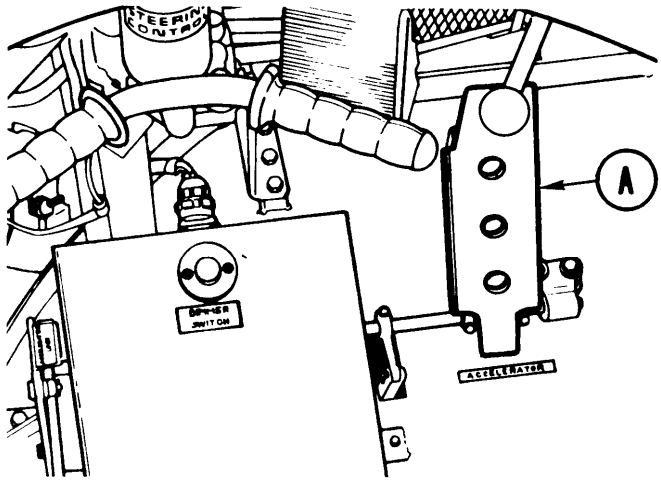

REMOVAL:

1. Remove accelerator pedal (A) from vehicle.

Go on to Sheet 2

TA248428

ACCELERATOR PEDAL ASSEMBLY REPLACEMENT (Sheet 2 of 2)

Using two wrenches, remove stop screw and nut (B).

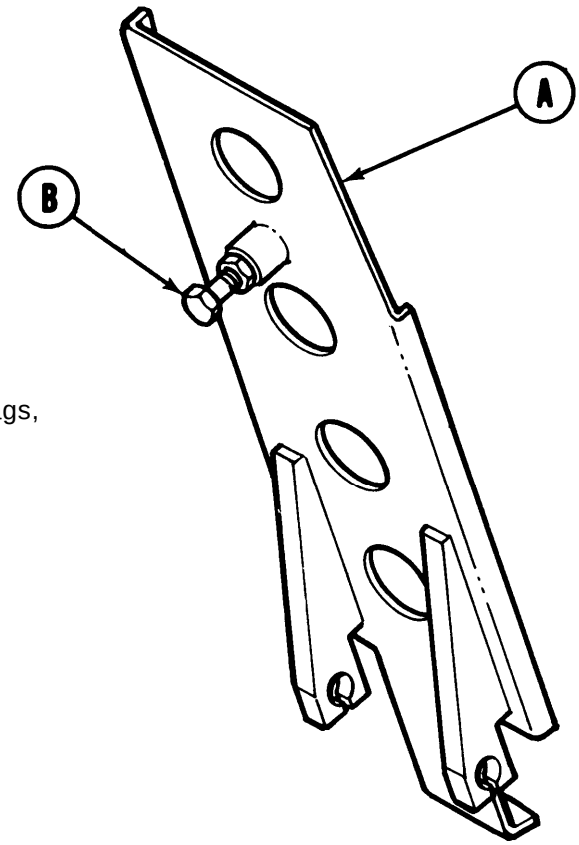

CLEANING AND INSPECTION:

1. Using dry cleaning solvent and clean rags, clean all parts.
2. Inspect pedal (A) for cracks, bends, wear, and other defects.

INSTALLATION:

1. Using two wrenches, install screw and nut (B) onto pedal (A).
2. Install throttle control assembly (page 7-318).
3. Install accelerator control rod (page 7-311).
4. Using wrench, adjust pedal stop (C) to 1.4 inch gap.

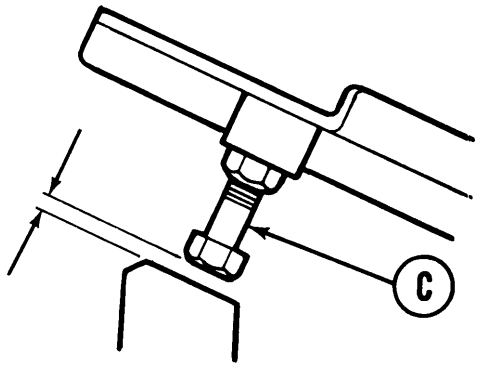

End of Task

TA248429

ACCELERATOR CONTROL ROD REPLACEMENT (Sheet 1 of 5)

PROCEDURE INDEX

PROCEDURE	PAGE
Removal	7-308
Cleaning and Inspection	7-310
Installation	7-311

TOOLS: 3/8 in. dia. drive punch
7/16 in. socket with 3/8 in. drive
9/16 in. socket with 3/8 in. drive
3/8 in. drive ratchet handle
Slip joint pliers
Ball peen hammer
Retaining ring pliers
Vise

SUPPLIES: Clean rags (Item 65, Appendix D)
Dry cleaning solvent (Item 55, Appendix D)
Gloves (Item 69, Appendix D)
Goggles (Item 70, Appendix D)

PRELIMINARY PROCEDURE: Remove throttle control handle assembly (page 7-327)

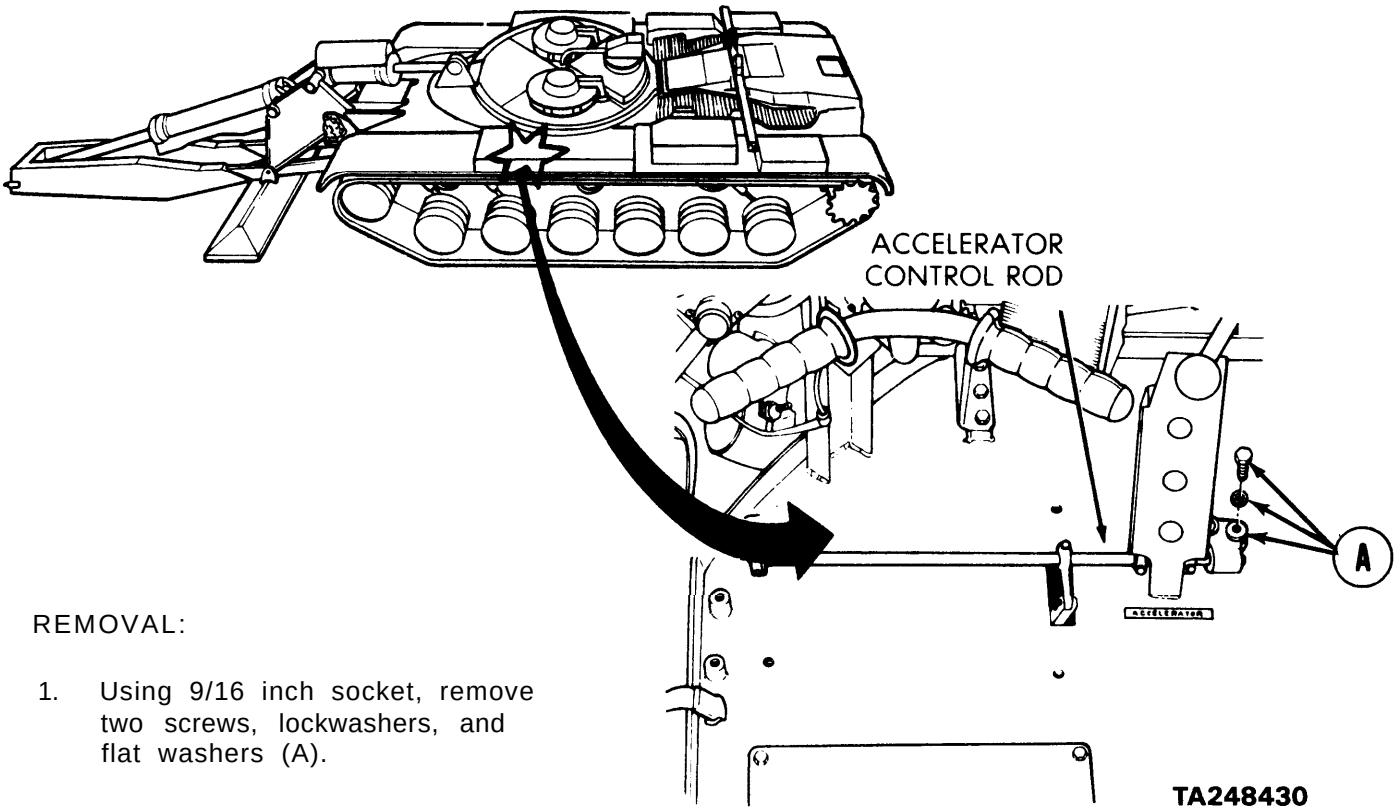

REMOVAL:

1. Using 9/16 inch socket, remove two screws, lockwashers, and flat washers (A).

Go on to Sheet 2

ACCELERATOR CONTROL ROD REPLACEMENT (Sheet 2 of 5)

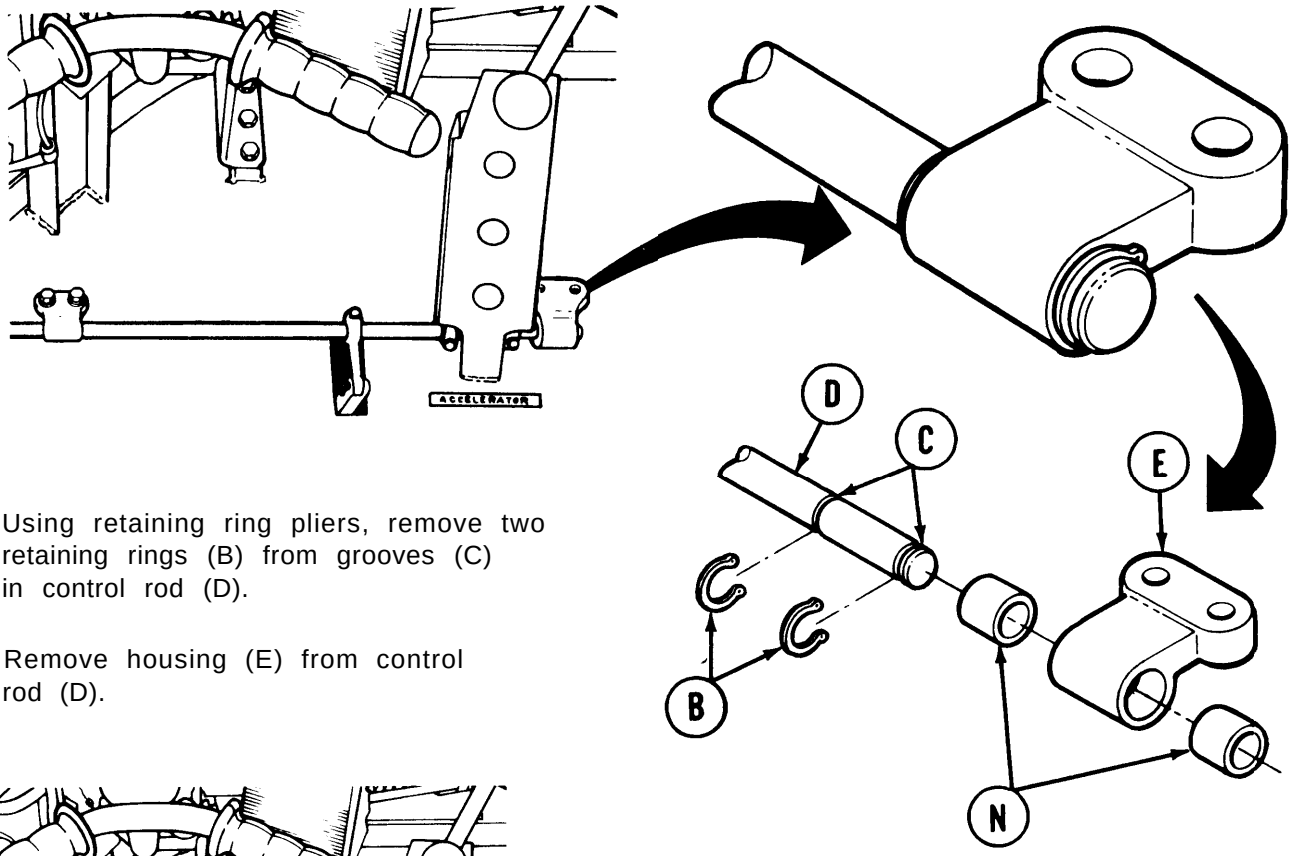

2. Using retaining ring pliers, remove two retaining rings (B) from grooves (C) in control rod (D).

3. Remove housing (E) from control rod (D).

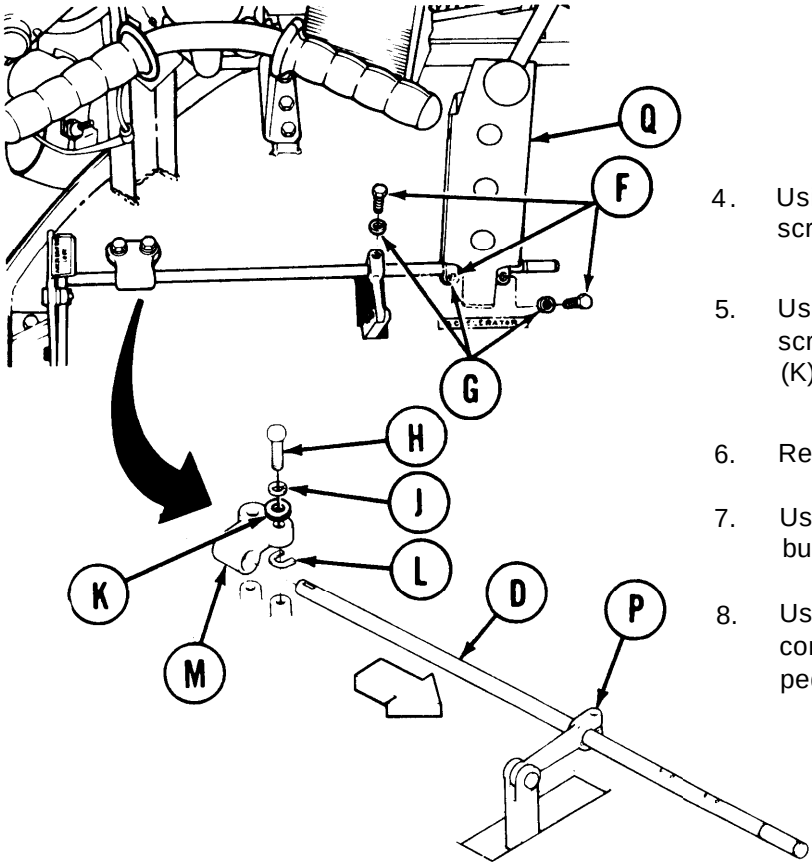

4. Using 7/16 inch socket, remove three screws (F) and lockwashers (G).

5. Using 9/16 inch socket, remove two screws (H), lockwashers (J), flat washers (K), and shim (L) (if so equipped).

6. Remove housing (M) from control rod (D).

7. Using hammer and drive punch, remove bushings (N) from housings (E) and (M).

8. Using hammer and drive punch, tap control rod (D) out of link (P) and pedal (Q).

Go on to Sheet 3

TA248431

ACCELERATOR CONTROL ROD REPLACEMENT (Sheet 3 of 5)

9. Using pliers, remove three woodruff keys (R) from control rod (D).

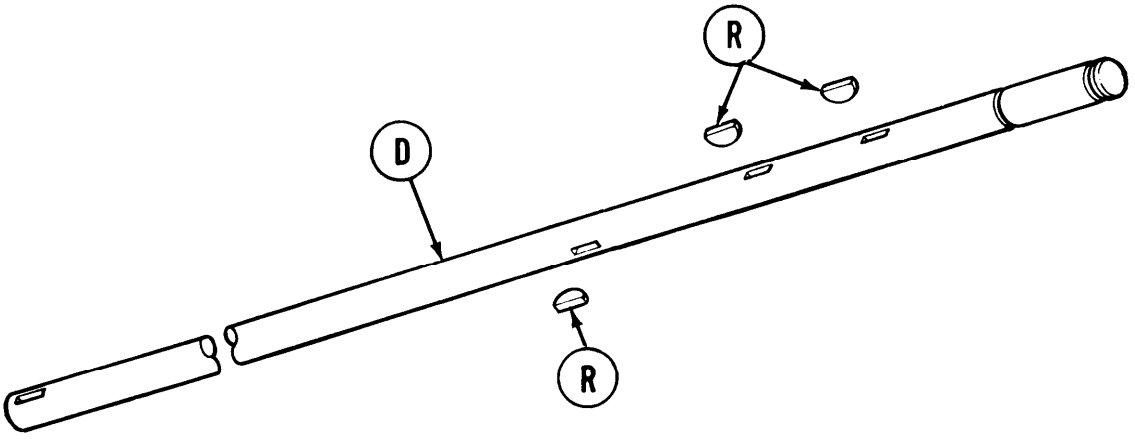

CLEANING AND INSPECTION:

WARNING

Dry cleaning solvent P-D-680 is toxic and flammable. To prevent personal injury, wear protective goggles and gloves and use only in a well-ventilated area. Avoid contact with skin, eyes, and clothes and don't breathe vapors. Do not use near open flame or excessive heat. The flash point for Type #1 Dry Cleaning solvent is 100°F (38°C) and for Type #2 is 138°F (50°C). If you become dizzy while using cleaning solvent, get fresh air immediately and get medical aid. If contact with eyes is made, wash your eyes with water and get medical aid immediately.

1. Using dry cleaning solvent and clean cloths, clean all parts.

2. Check all parts for bends, cracks, wear in holes, and other defects. Replace defective parts.

3. Inspect bushings (A) for wear. Replace defective bushings (A) if damaged.

4. Examine housing (B) for cracks.

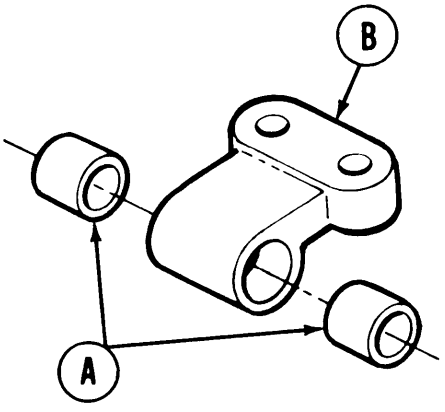

Go on to Sheet 4

TA248432

ACCELERATOR CONTROL ROD REPLACEMENT (Sheet 4 of 5)

INSTALLATION:

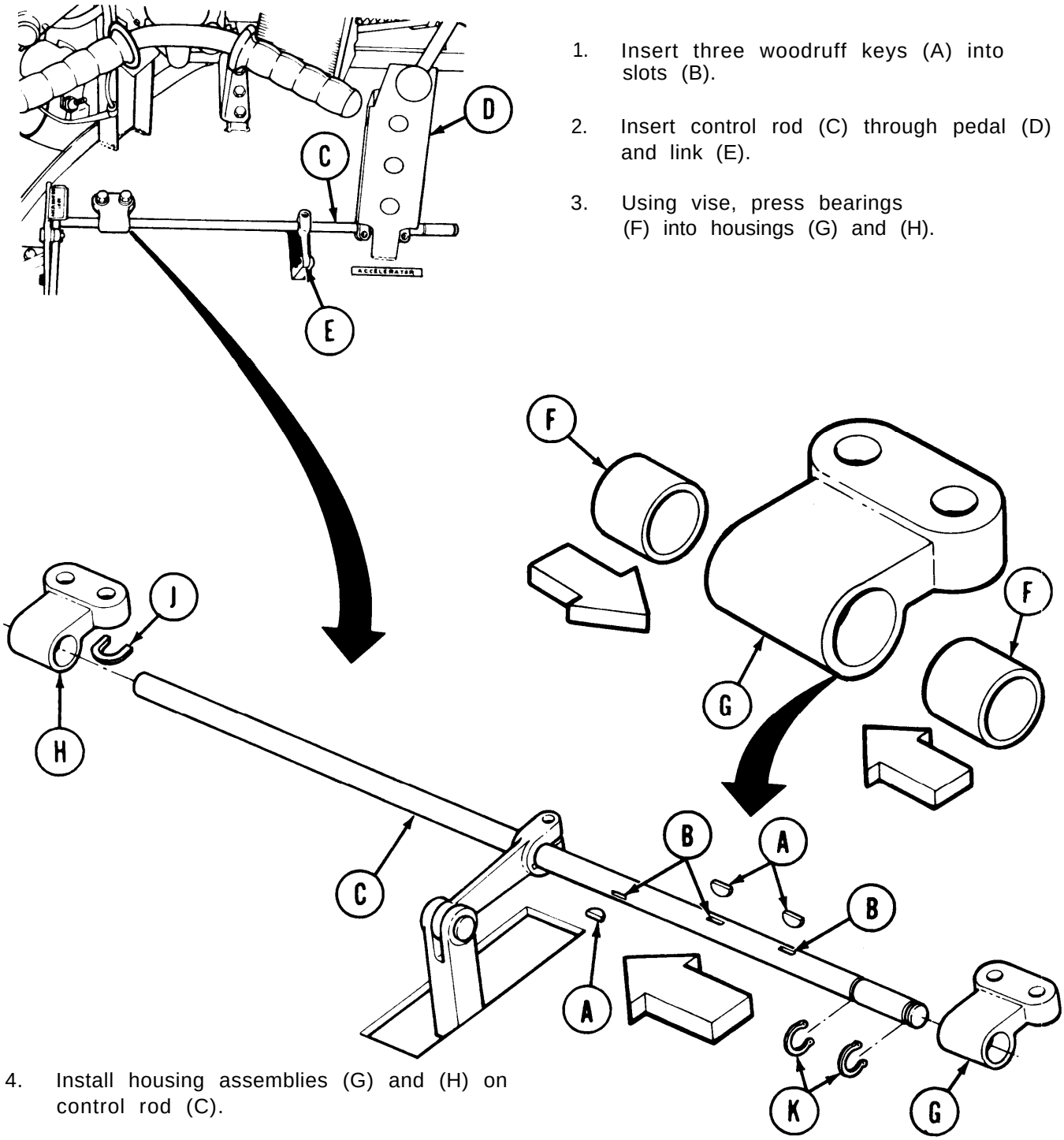

1. Insert three woodruff keys (A) into slots (B).

2. Insert control rod (C) through pedal (D) and link (E).

3. Using vise, press bearings (F) into housings (G) and (H).

4. Install housing assemblies (G) and (H) on control rod (C).

5. Install shims (J) under housing (H) for proper alinement.

6. Install retaining rings (K) on control rod (C).

Go onto Sheet 5

TA248433

ACCELERATOR CONTROL ROD REPLACEMENT (Sheet 5 of 5)

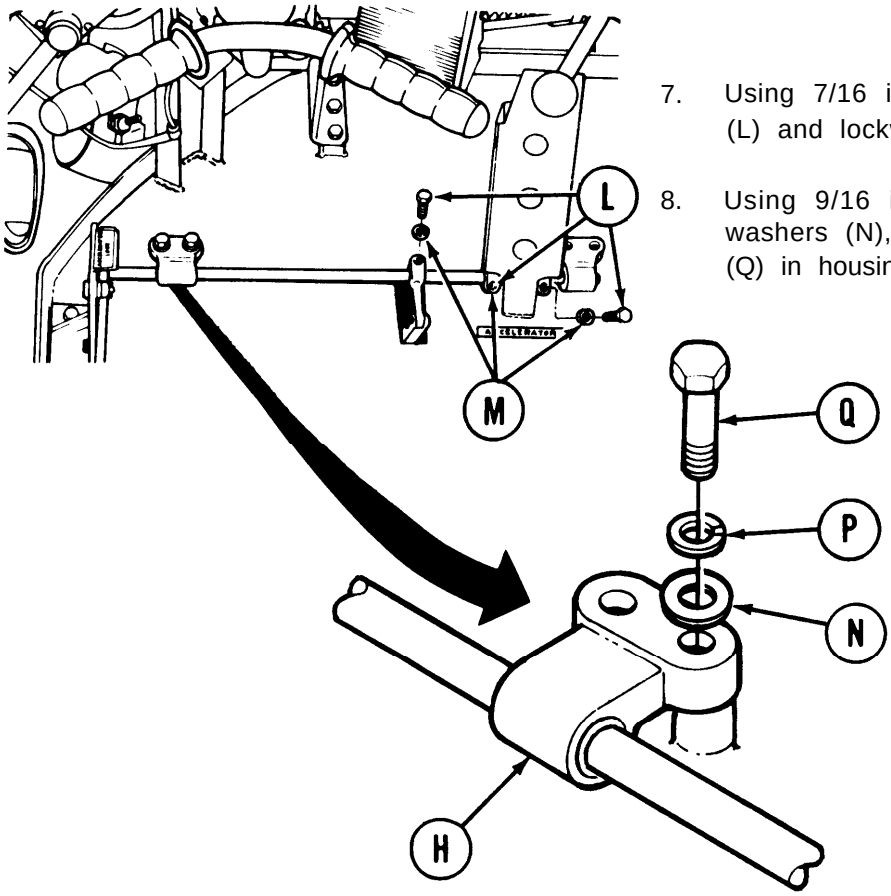

7. Using 7/16 inch socket, install three screws (L) and lockwashers (M).

8. Using 9/16 inch socket, install two flat washers (N), lockwashers (P), and screws (Q) in housing (H).

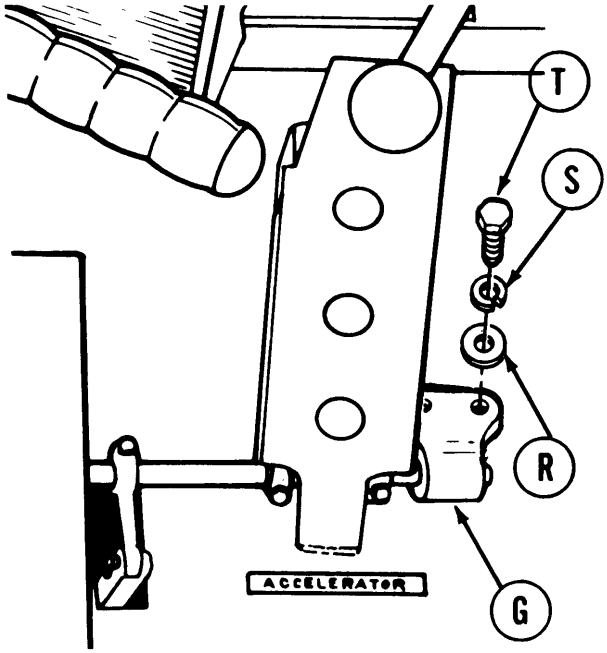

9. Using 9/16 inch socket, install two flat washers (R), lockwashers (S), and screws (T) in housing (G).

10. Install throttle control handle assembly (page 7-329).

End of Task

TA248434

ACCELERATOR THROTTLE LINKAGE REPLACEMENT (Sheet 1 of 9)

PROCEDURE INDEX

PROCEDURE	PAGE
Removal	7-313
Cleaning and Inspection	7-317
Installation	7-318

TOOLS: 7/16 in. box end wrench
1/2 in. open end wrench
1/2 in. crowfoot attachment with 1/2 in. drive
6 in. cross-tip screwdriver
Slip joint pliers
Mechanic's scribe
Torque wrench with 1/2 in. drive (100 lb-ft capacity)

SUPPLIES: Lint-free cloths (Item 12, Appendix D)
Dry cleaning solvent (Item 55, Appendix D)
Pencil (Item 71, Appendix D)
Cotter pin (5 required)
Paper (Item 72, Appendix D)
Gloves (Item 69, Appendix D)
Goggles (Item 70, Appendix D)

PRELIMINARY PROCEDURE: Remove operators floor access plate (page 17-8).

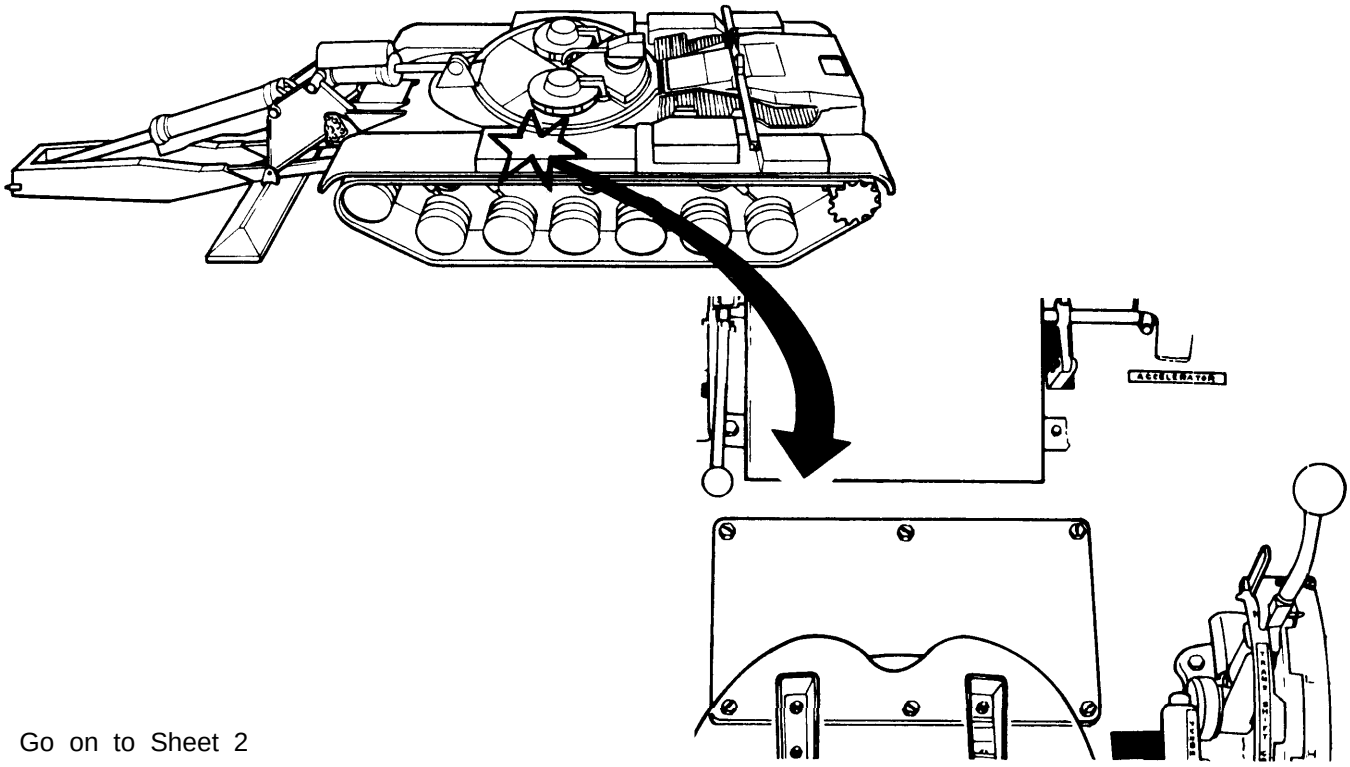

Go on to Sheet 2

TA248435

ACCELERATOR THROTTLE LINKAGE REPLACEMENT (Sheet 2 of 9)

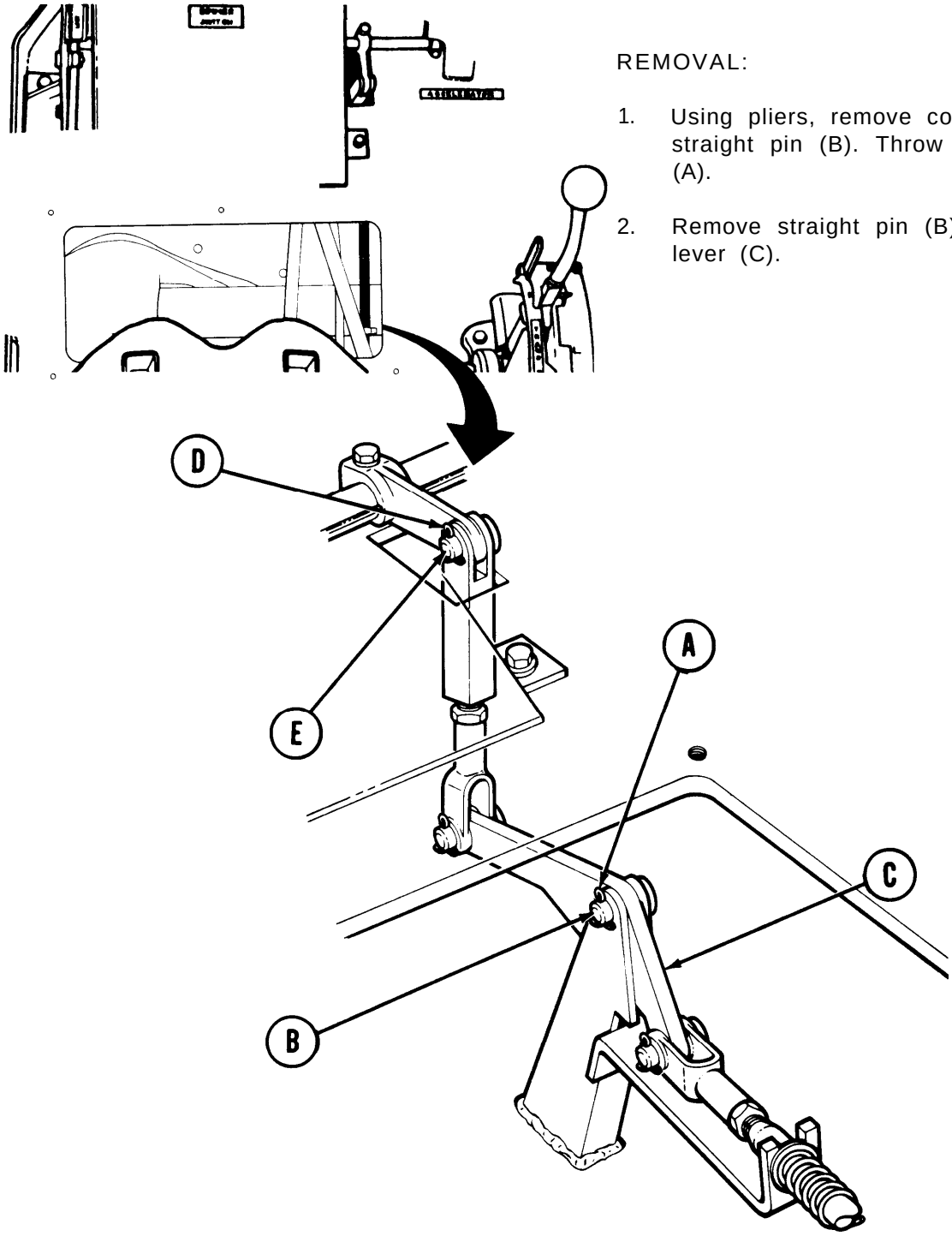

REMOVAL:

1. Using pliers, remove cotter pin (A) from straight pin (B). Throw away cotter pin (A).

2. Remove straight pin (B) from bellcrank lever (C).

3. Using pliers, remove cotter pin (D) from straight pin (E). Throw away cotter pin.

4. Remove straight pin (E).

Go on to Sheet 3

TA248436

ACCELERATOR THROTTLE LINKAGE REPLACEMENT (Sheet 3 of 9)

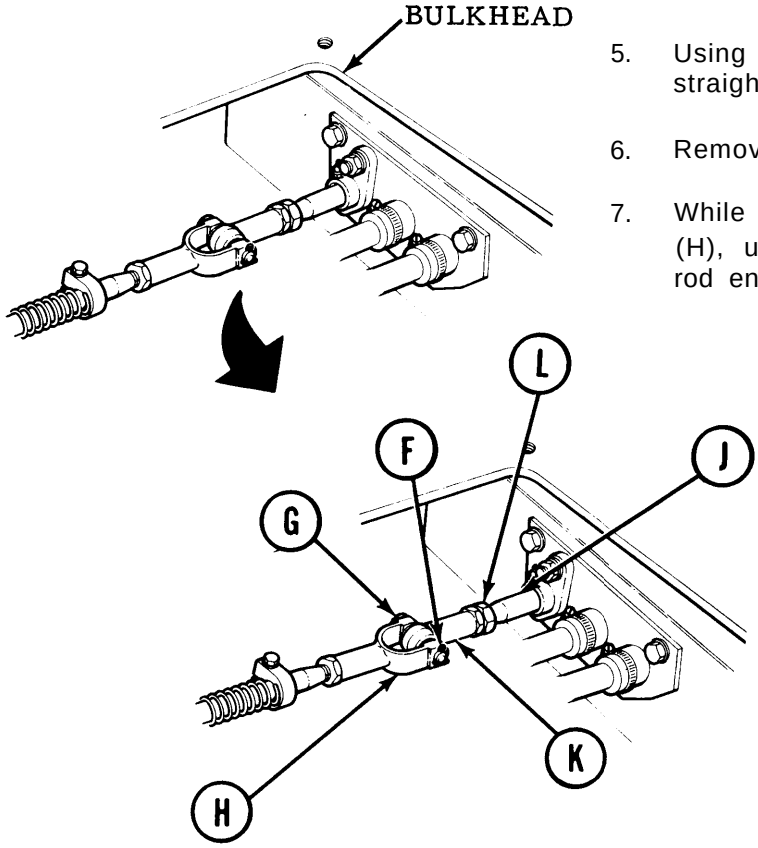

5. Using pliers, remove cotter pin (F) from straight pin (G).

6. Remove straight pin(G) from clevis (H).

7. While holding tube (J) clear of clevis (H), use 7/16 inch wrench to remove rod end (K).

8. Using 1/2 inch wrench, remove nut (L).

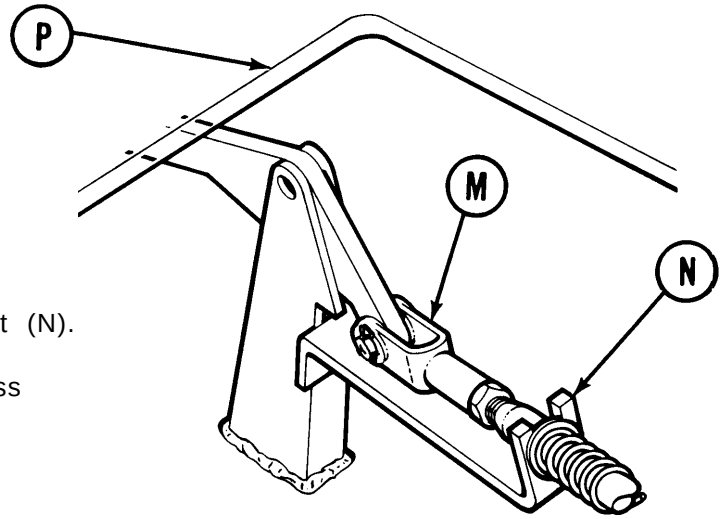

9. Lift throttle linkage (M) out of bracket (N).

10. Pull throttle linkage (M) through access plate hole (P).

Go onto Sheet 4

TA248437

ACCELERATOR THROTTLE LINKAGE REPLACEMENT (Sheet 4 of 9)

11. Using 1/2 inch wrench, loosen nut (S).

12. Unscrew clevis (H) and nut (S) from rod (R).

13. Using scribe, mark location of clamp (Q) on rod (R).

NOTE

Count and write down number of turns needed to unscrew clevis (H).

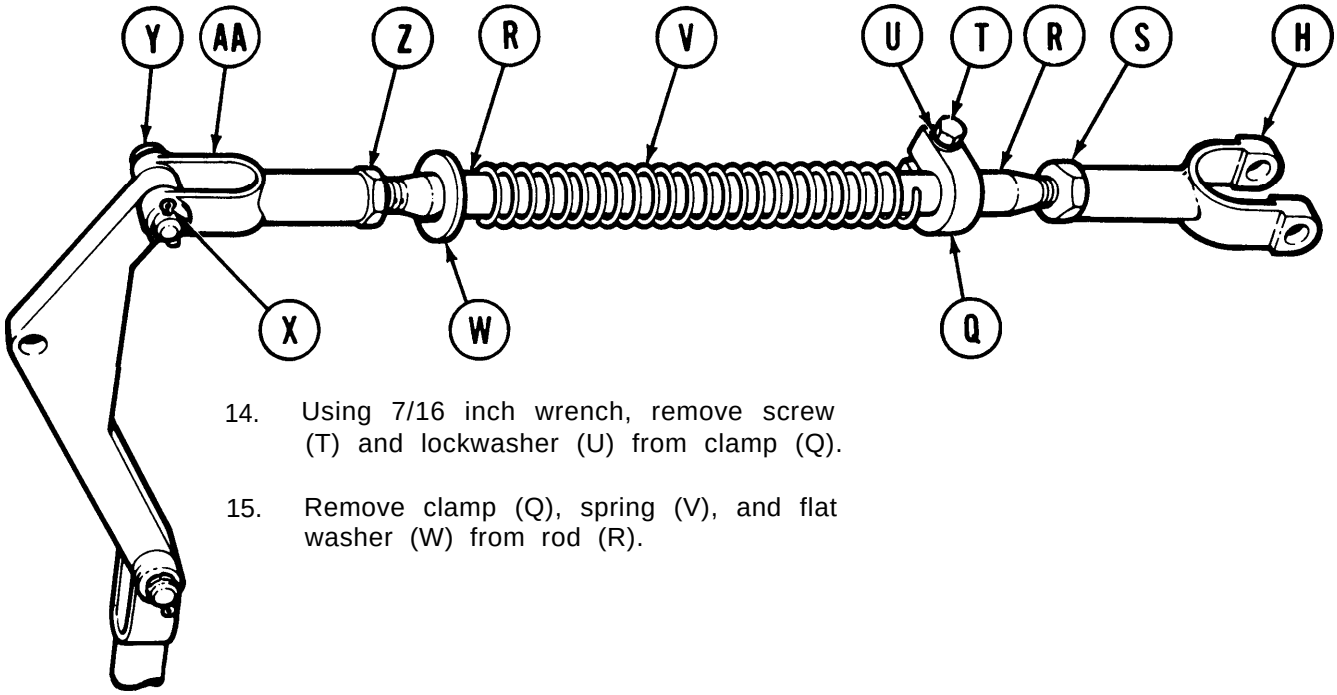

14. Using 7/16 inch wrench, remove screw (T) and lockwasher (U) from clamp (Q).

15. Remove clamp (Q), spring (V), and flat washer (W) from rod (R).

16. Using pliers, remove cotter pin (X) from straight pin (Y).

17. Remove straight pin (Y).

18. Using 1/2 inch wrench, loosen nut (Z).

NOTE

Count and write down number of turns needed to unscrew clevis (AA).

19. Unscrew clevis (AA) and nut (Z) from rod (R).

Go on to Sheet 5

TA248438

ACCELERATOR THROTTLE LINKAGE REPLACEMENT (Sheet 5 of 9)

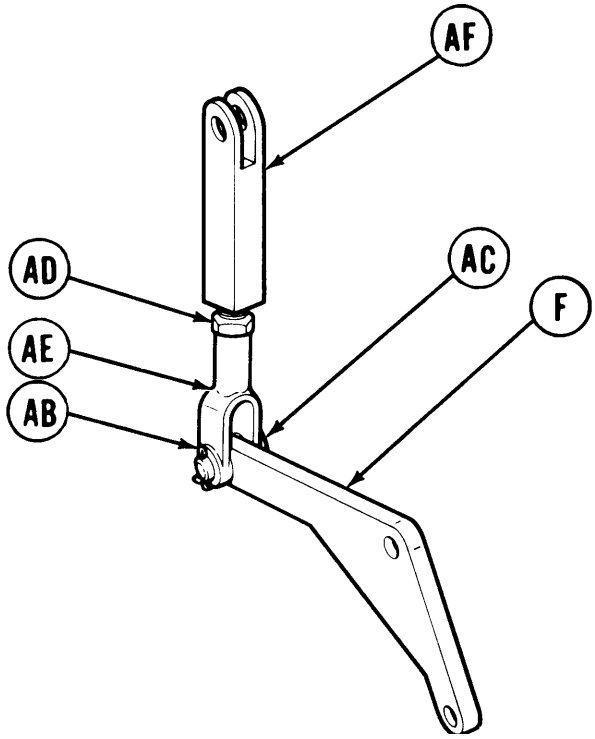

20. Using pliers, remove cotter pin (AB) from straight pin (AC).

21. Remove straight pin (AC).

22. Remove bellcrank lever (C).

23. Using 1/2 inch wrench, loosen nut (AD).

NOTE

Count and write down number of turns needed to unscrew clevis (AE).

24. Unscrew clevis (AE) and nut (AD) from connecting link (Al?).

CLEANING AND INSPECTION:

WARNING

Dry cleaning solvent P-D-680 is toxic and flammable. To prevent personal injury, wear protective goggles and gloves and use only in a well-ventilated area. Avoid contact with skin, eyes, and clothes and don't breathe vapors. Do not use near open flame or excessive heat. The flash point for Type #1 Dry Cleaning Solvent is 100°F (38°C) and for Type #2 is 138°F (50°C). If you become dizzy while using cleaning solvent, get fresh air immediately and get medical aid. If contact with eyes is made, wash your eyes with water and get medical aid immediately.

1. Using dry cleaning solvent and clean cloths, clean all parts.

2. Inspect all parts for bends, cracks, stripped threads, wear, or other defects. Replace defective parts.

Go on to Sheet 6

TA248439

ACCELERATOR THROTTLE LINKAGE REPLACEMENT (Sheet 6 of 9)

INSTALLATION:

1. Screw nut (A) onto connecting link(B).

2. Screw clevis (C) onto connecting link(B). Rotate clevis (C) to number of turns recorded.

3. Using torque wrench and crowfoot attachment, tighten nut (A) between 6-8 lb-ft (8-11 N m) while holding clevis (C) with pliers.

4. Connect clevis (C) to bellcrank lever (D). Insert straight pin (E) into connected clevis (C) and bellcrank lever(D).

5. Using pliers, install cotter pin (F) to straight pin(E).

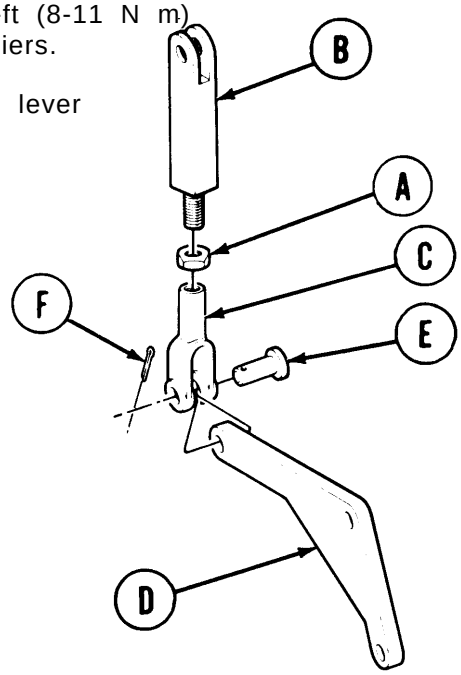

6. Mount assembled linkage (G) to bracket (H).

7. Insert straight pin (J) through bracket (H).

8. Using pliers, install cotter pin (K) to straight pin (J).

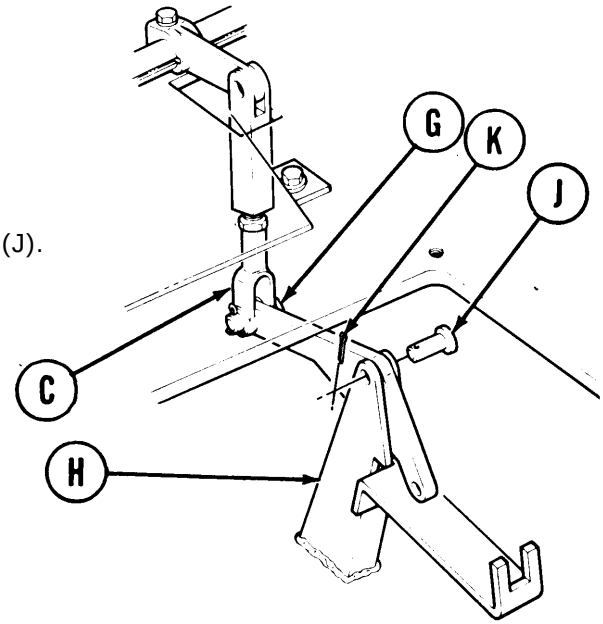

Go onto Sheet 7

TA248440

ACCELERATOR THROTTLE LINKAGE REPLACEMENT (Sheet 7 of 9)

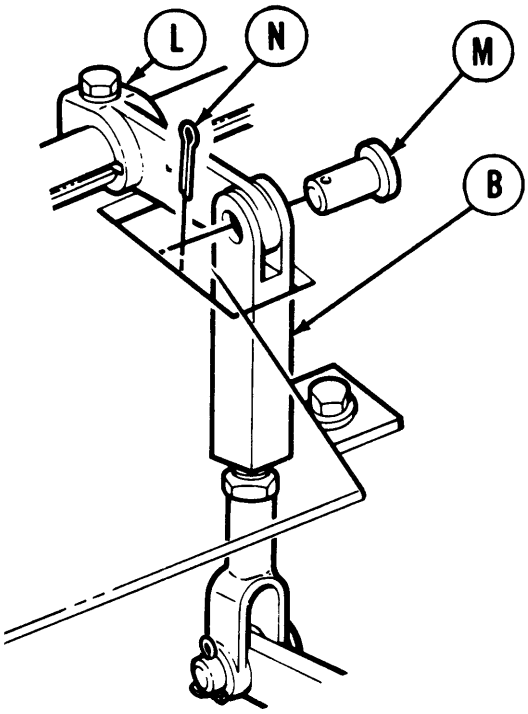

9. Connect link (L) to connecting link (B).

10. Insert straight pin (M) through assembled links.

11. Using pliers, install cotter pin (N) to straight pin (M).

12. Screw nut (P) onto rod (Q).

13. Place rod (Q) into holding bracket (R).

14. Screw smaller of remaining clevises (S) on rod (Q) the same number of turns recorded for removal.

15. Using torque wrench and crow foot attachment, tighten nut (P) between 6-8 lb-ft (8-11 N m) while holding clevis (S) with pliers.

16. Install clevis (S) to bellcrank lever (D). Insert straight pin (T) into clevis (S).

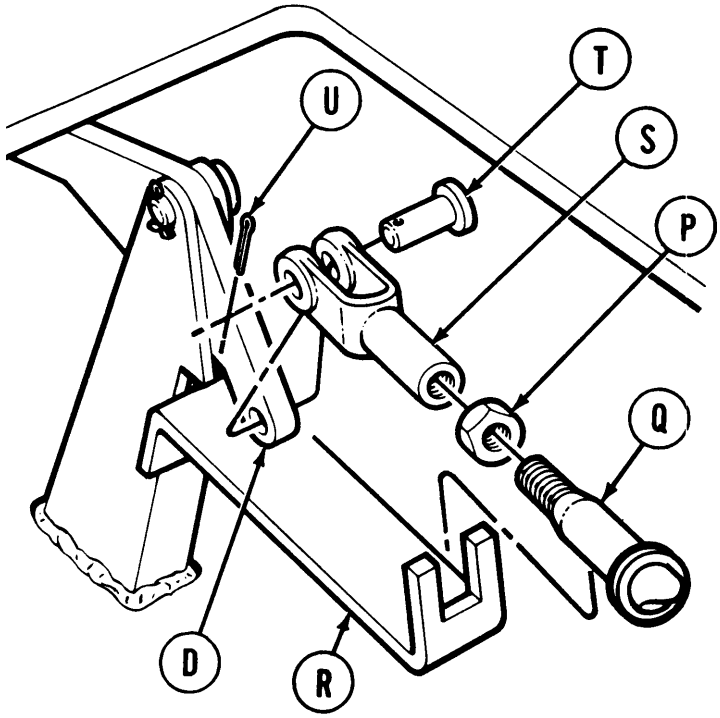

17. Using pliers, install cotter pin (U) to straight pin (T).

Go on to Sheet 8

TA248441

ACCELERATOR THROTTLE LINKAGE REPLACEMENT (Sheet 8 of 9)

18. Install flat washer (V), spring (W), and clamp (X) on rod (Q). Make sure clamp (X) is on scribe mark on rod (Q).

19. Using 7/16 inch wrench, install screw (Y) and lockwasher (Z) in clamp (X).

20. Screw nut (AA) onto rod ((Q).

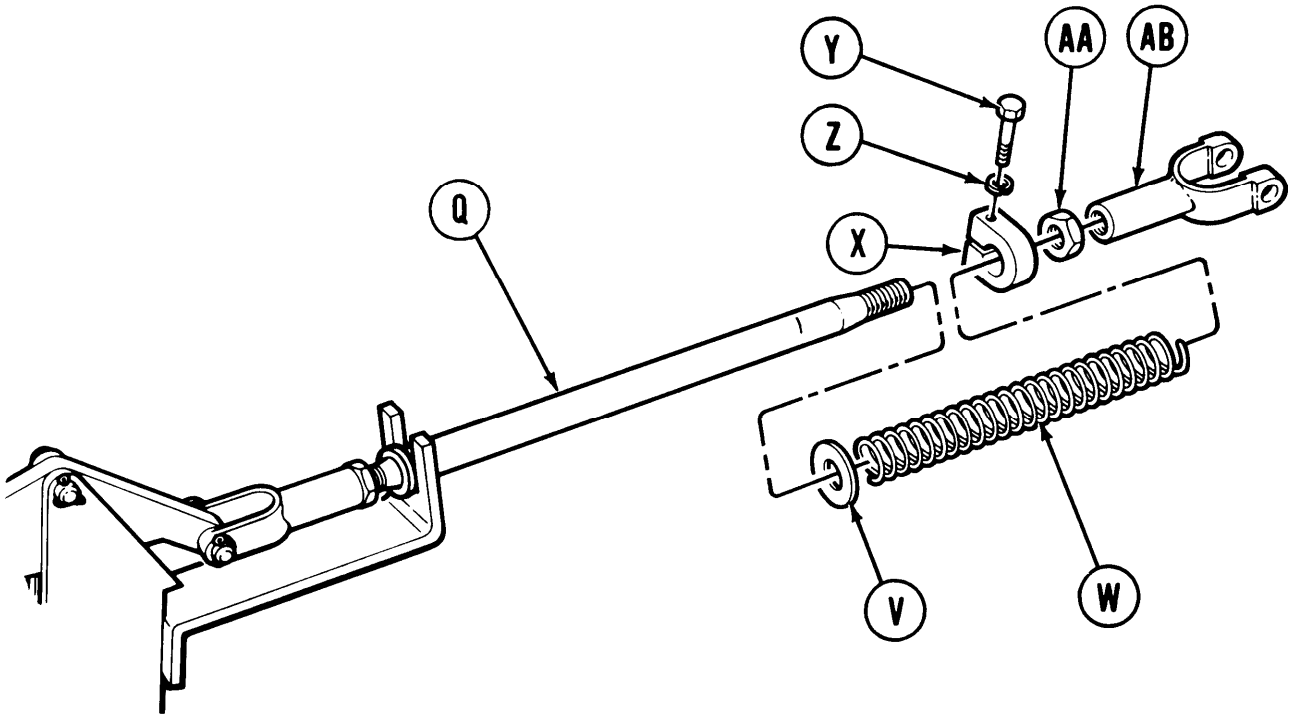

21. Screw clevis (AB) to same number of turns recorded for removal on rod (Q).

22. Using torque wrench and crowfoot attachment, tighten nut (AA) between 6-8 lb-ft (8-11 NŽm) while holding clevis (AB) with pliers.

23. Using 1/2 inch wrench, install nut (AC) on tube (AD).

24. Using 7/16 inch wrench, install rod end (AE) on tube (AD).

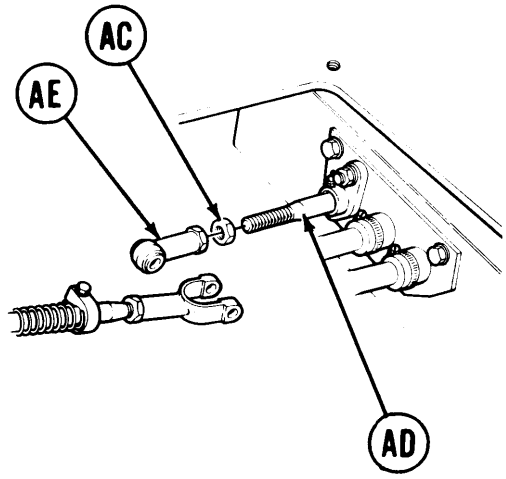

Go on to Sheet 9

TA248442

ACCELERATOR THROTTLE LINKAGE REPLACEMENT (Sheet 9 of 9)

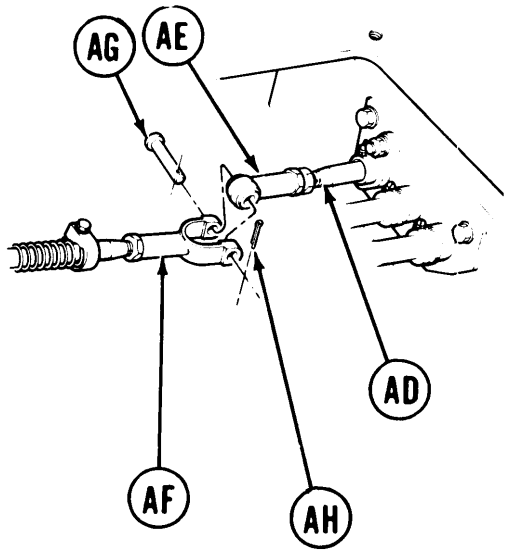

25. Tighten rod end (AE) on tube (AD) until hole of clevis (AF) alines with hole in rod end (AE).

26. Insert straight pin (AG) into hole of rod end (AE) and clevis (AF).

27. Using pliers, install cotter pin (AH) to straight pin (AG).

28. Install operators floor access plate (page 17-8).

End of Task

TA248443

ACCELERATOR LINKAGE ENGINE CONTROL REPLACEMENT (Sheet 1 of 2)

TOOLS: 9/16 in. socket with 1/2 in. drive
5 in. long extension with 1/2 in. drive
1/2 in. drive ratchet
7/16 in. combination wrench (2 required)
1/2 in. combination wrench

SUPPLIES: Clean rags (Item 12, Appendix D)
Dry cleaning solvent (Item 55, Appendix D)
Pencil (Item 71, Appendix D)
Paper (Item 72, Appendix D)
Gloves (Item 69, Appendix D)
Goggles (Item 70, Appendix D)

PRELIMINARY PROCEDURE: Remove operator's seat backrest (page 17-54)
Remove engine upper access cover (page 17-11)

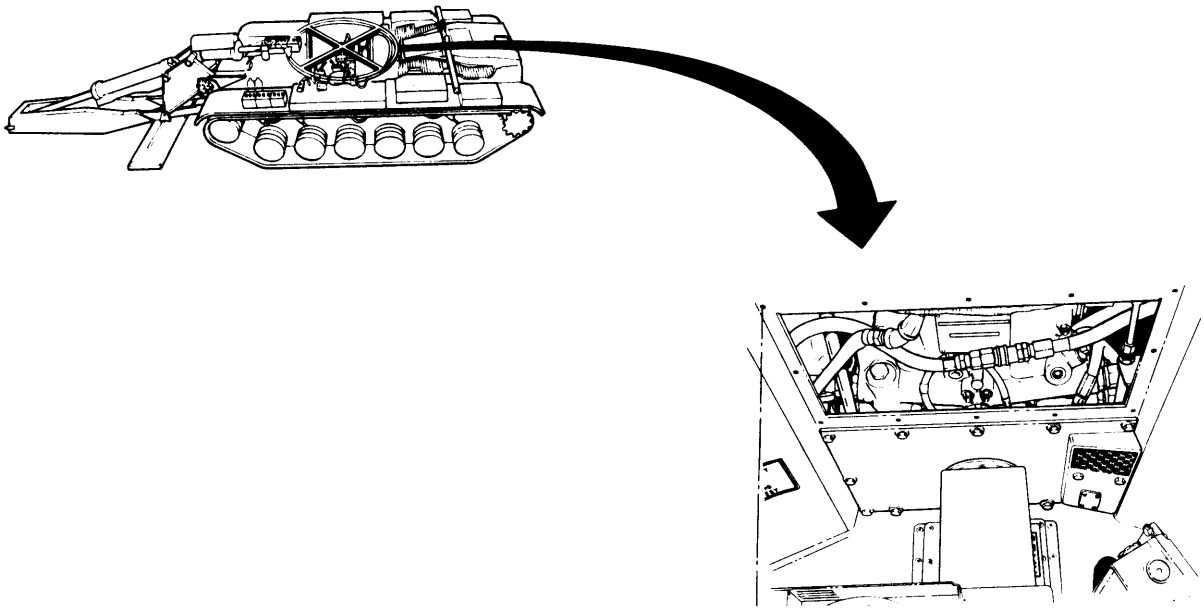

Go on to Sheet 2

TA248444

ACCELERATOR LINKAGE ENGINE CONTROL REPLACEMENT (Sheet 2 of 2)

REMOVAL:

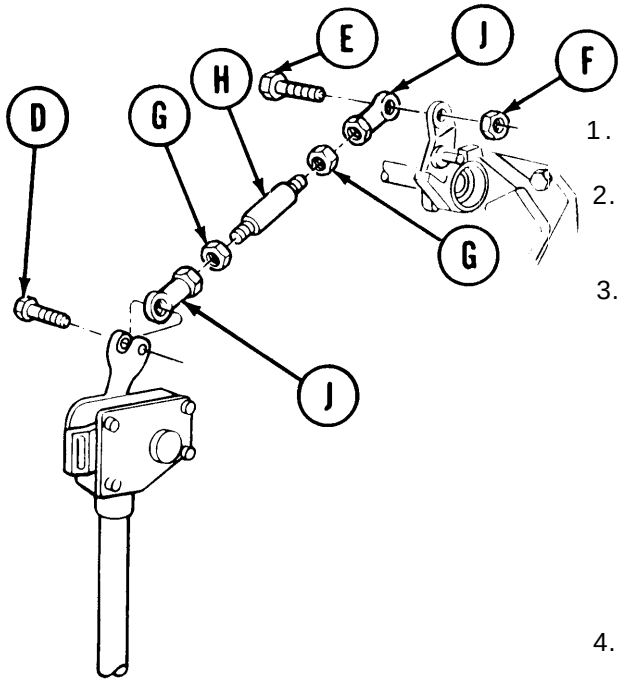

1. Using 7/16 inch wrench, remove screw
2. Using two 7/16 inch wrenches, remove (E) and Nut (F).
3. Using 1/2 inch wrench and 7/16 inch wrench, loosen nuts (G) from stud (H).

   Count and write down number of turns needed to unscrew rod ends (J).

NOTE

Count and write down number of turns needed to unscrew rod ends (J).

4. Unscrew rod ends (J) and nuts (G) from stud (H).

CLEANING AND INSPECTION:

1. Clean all parts using dry cleaning solvent and clean rags.
2. Inspect all parts for bends, cracks, stripped threads, wear, or other defects. Replace defective parts.

INSTALLATION:

1. Install nuts (A) onto stud (B).
2. Screw rod ends (C) to same number of turns recorded for removal on stud (B).
3. Using 1/2 inch wrench and 7/16 inch wrench, tighten nuts (A).
4. Position rod assembly in place.
5. Using two 7/16 inch wrenches, install screw (D) and nut (E).
6. Using 7/16 inch wrench, install screw (F).
7. Install engine upper access cover (page 17-12)

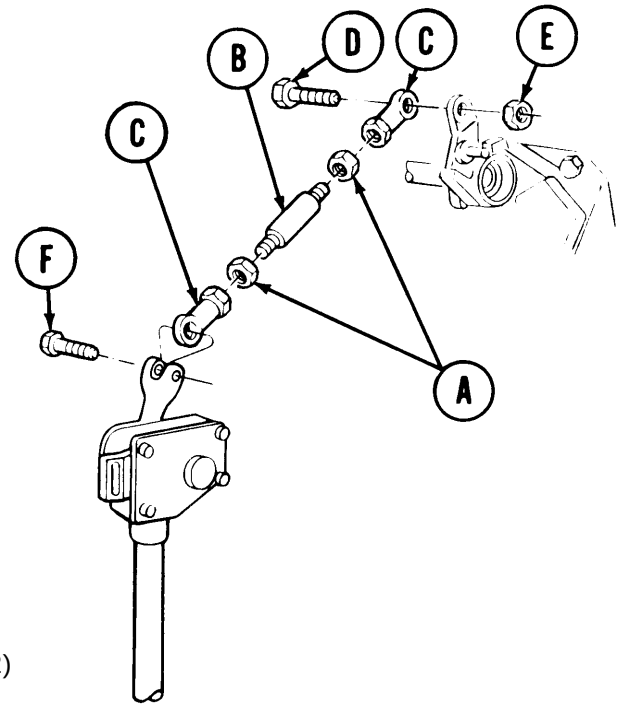

End of Task

TA248445

ACCELERATOR LINKAGE BULKHEAD FLANGE REPLACEMENT (Sheet 1 of 3)

TOOLS: 7/16 in. open end wrench.
1/2 in. open end wrench
1/2 in. drive punch
9/16 in. socket with 1/2 in. drive
5 in. extension with 1/2 in. drive
6 in. cross-tip screwdriver
Slip joint pliers
Ratchet with 1/2 in. drive
Vise
Hammer

SUPPLIES: Chalk
Seal (2 required)
Bearing

PRELIMINARY PROCEDURE: Remove operators floor access plate (page 17-8).

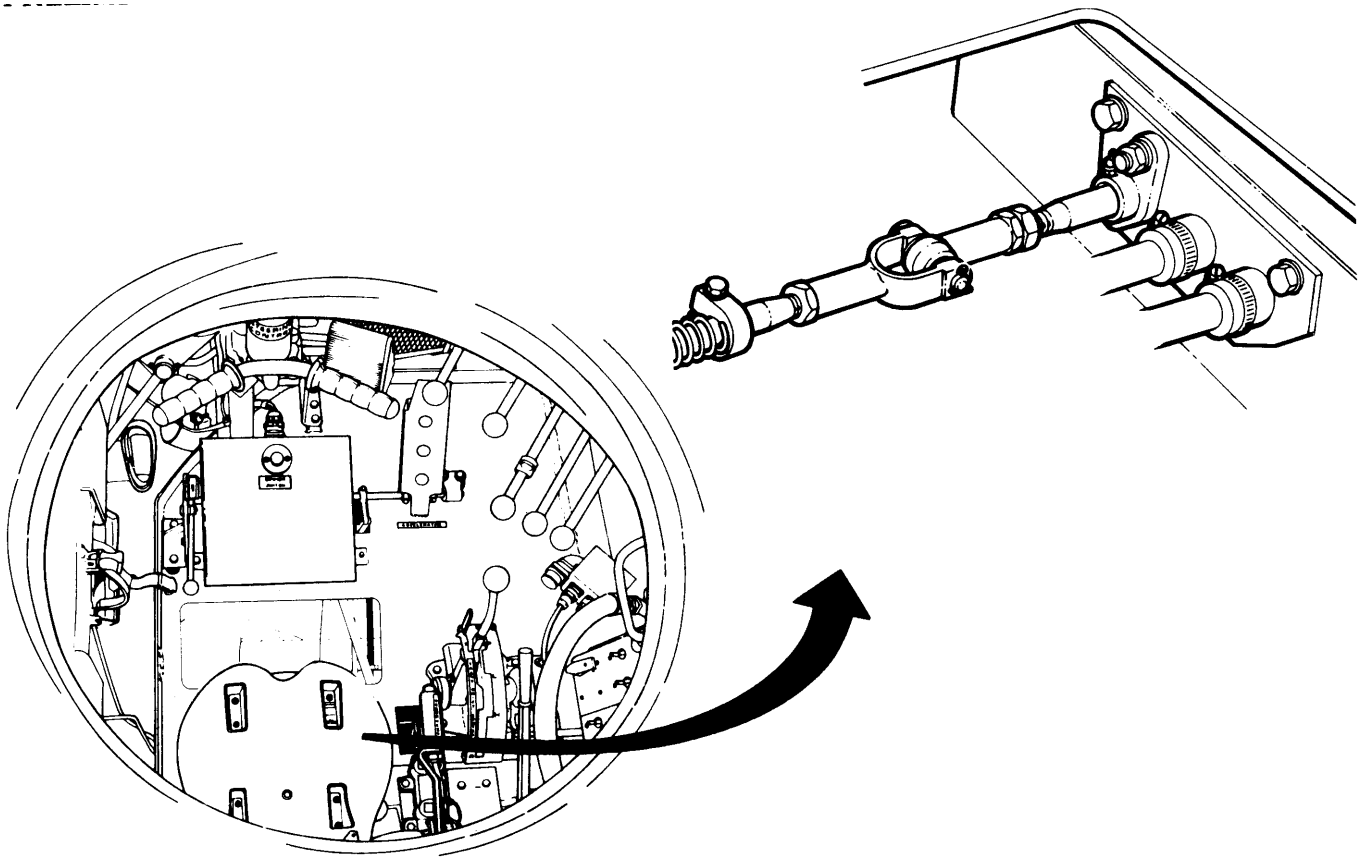

Go on to Sheet 2

TA248446

ACCELERATOR LINKAGE BULKHEAD FLANGE REPLACEMENT (Sheet 2 of 3)

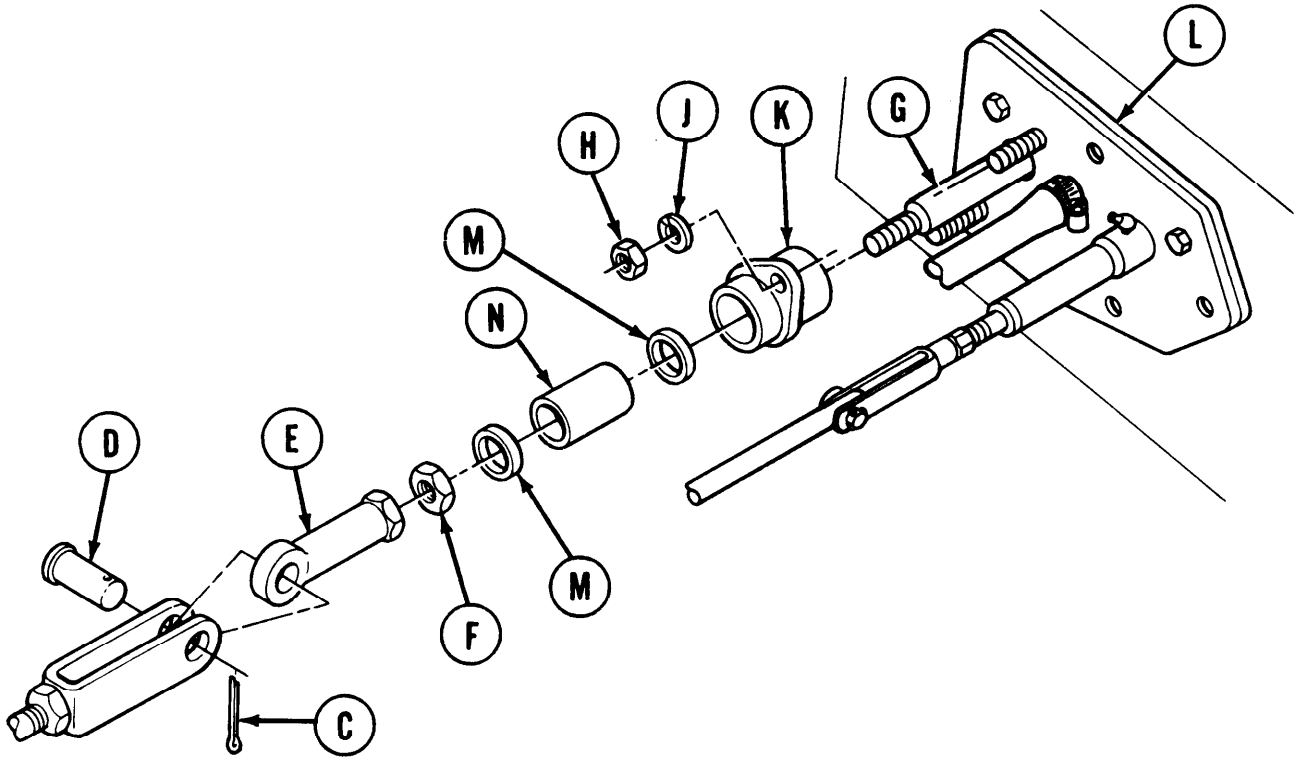

2. Using pliers, remove cotter pin (C) from pin (D).

3. Remove pin (D).

4. Holding rod end (E) with 7/16 inch wrench, use 1/2 inch wrench to back off nut (F). Use chalk to mark rod threads as close as possible to rod end.

5. Using 7/16 inch and 1/2 inch wrench, remove rod end (E) and nut (F) from rod (G).

6. Using socket with extension, remove two nuts (H) and lockwashers (J) securing flange (K) to plate (L).

7. Pull flange (K) off rod.

8. Using vise, hammer, and punch, drive two seals (M) and bearing (N) out of flange (K).

Go on to Sheet 3

TA248447

ACCELERATOR LINKAGE BULKHEAD FLANGE REPLACEMENT (Sheet 3 of 3)

INSTALLATION:

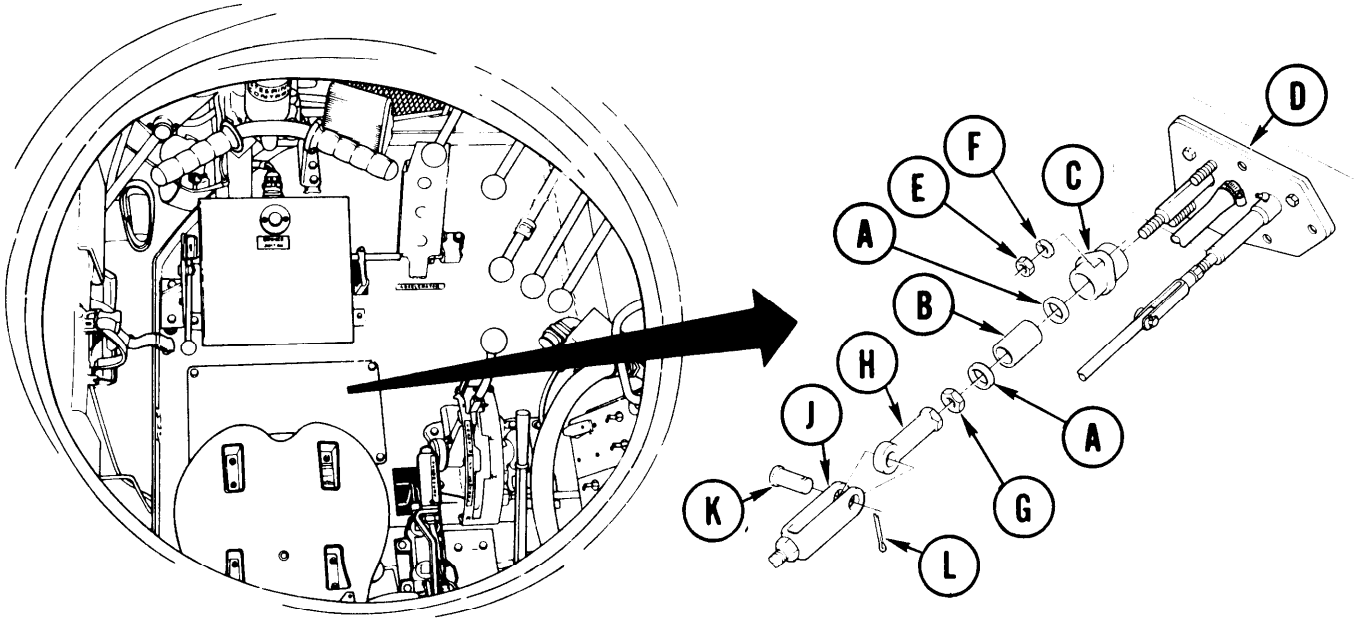

1. Using vise, press two new seals (A) and new bearings (B) into flange (C), making sure lips of seals (A) are outward and seals (A) are flush with flange surface.
2. Push flange (C) onto rod and into position against plate (D).
3. Using socket with extension, install two nuts (E) and lockwashers (F).
4. Install nut (G) loosely on rod.
5. Using 7/16 inch wrench, install rod end (H) on rod up to start of chalk mark.
6. Holding rod end (H) with 7/16 inch wrench, use 1/2 inch wrench to tighten nut (G) against rod end (H).
7. Position clevis (J) on rod end (H).
8. Install pin (K) through clevis (J) and rod end (H).
9. Using pliers, install cotter pin (L).
10. Install operator's floor access plate (page 17-8).

End of Task

TA248448

THROTTLE CONTROL HANDLE ASSEMBLY REPLACEMENT (Sheet 1 of 4)

PROCEDURE INDEX

PROCEDURE	PAGE
Removal	7-327
Cleaning and Inspection	7-328
Installation	7-329

TOOLS: 1/4 in. drive punch
9/16 in. socket with 1/2 in. drive
7/16 in. combination box and open end wrench
Ratchet with 1/2 in. drive
Ball peen hammer
Slip joint pliers
Vise

SUPPLIES: Clean rags (Item 12, Appendix D)
Dry cleaning solvent (Item 55, Appendix D)
Gloves (Item 69, Appendix D)
Goggles (Item 70, Appendix D)

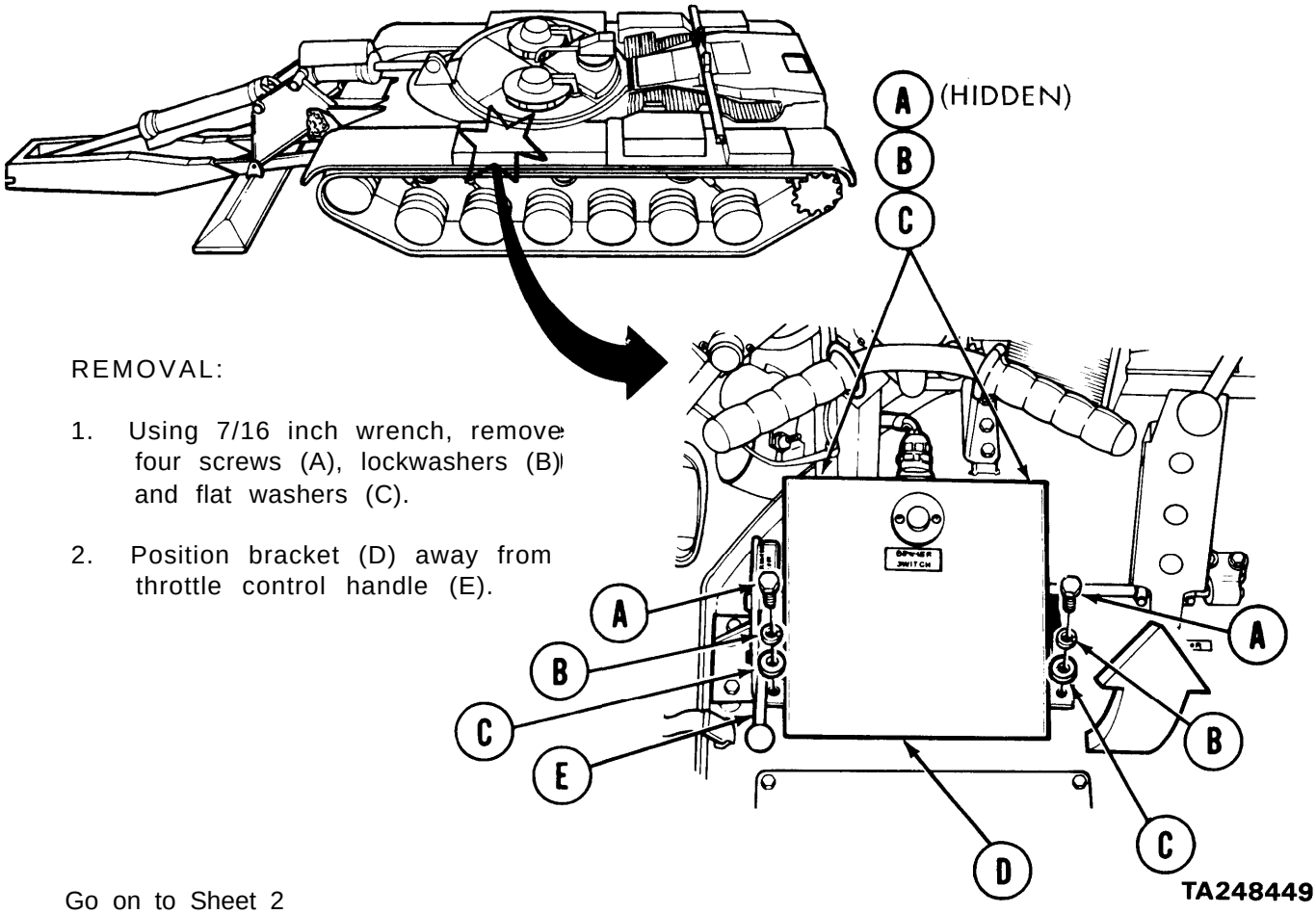

REMOVAL:

1. Using 7/16 inch wrench, remove four screws (A), lockwashers (B) and flat washers (C).

2. Position bracket (D) away from throttle control handle (E).

Go on to Sheet 2

THROTTLE CONTROL HANDLE ASSEMBLY REPLACEMENT (Sheet 2 of 2)

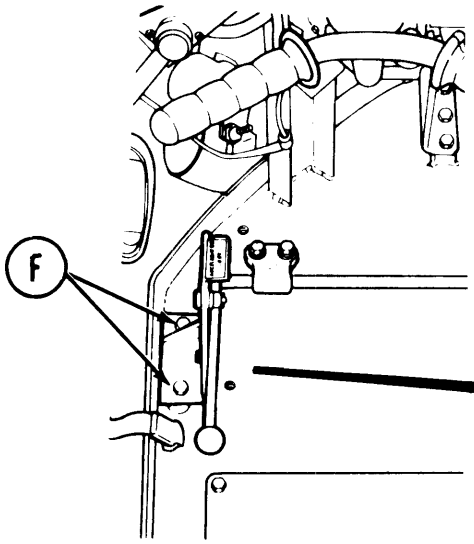

3. Using 9/16 inch socket, remove two screws and lockwashers (F).

4. Using 7/16 inch wrench, remove screw (G) and lockwasher (H).

5. Using pliers, remove spring (J) from bracket (K).

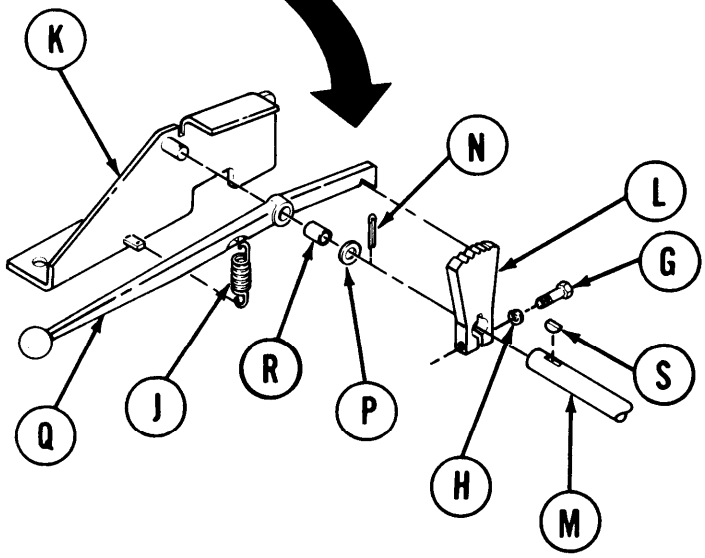

6. Using hammer, tap segment (L) lightly to remove segment (L) from shaft (M).

7. Using pliers, remove cotter pin(N).

8. Remove flat washer (P) and handle(Q) from bracket (K).

9. Using hammer and punch, remove bushing(R).

10. Using pliers, remove woodruff key (S) from shaft (M).

CLEANING AND INSPECTION:

WARNING

Dry cleaning solvent P-D-680 is toxic and flammable. To prevent personal injury, wear protective goggles and gloves and use only in a well-ventilated area. Avoid contact with skin, eyes, and clothes and don't breathe vapors. Do not use near open flame or excessive heat. The flash point for Type #1 Dry Cleaning Solvent is 100°F (38°C) and for Type #2 is 138°F (50°C). If you become dizzy while using cleaning solvent, get fresh air immediately and get medical aid. If contact with eyes is made, wash your eyes with water and get medical aid immediately.

1. Clean all parts using dry cleaning solvent and clean cloths.

2. Inspect all parts for cracks, bends, wear, and other defects. Replace any defective parts.

Go on to Sheet 3

TA248450

THROTTLE CONTROL HANDLE ASSEMBLY REPLACEMENT (Sheet 3 of 4)

INSTALLATION:

1. Using vise, press bushing (A) into handle (B).
2. Install handle (B) and lockwasher (C) to bracket (D).
3. Using pliers, install cotter pin (E).
4. Using pliers, install spring (F) onto bracket tab (G).
5. Insert woodruff key (H) into shaft (J).

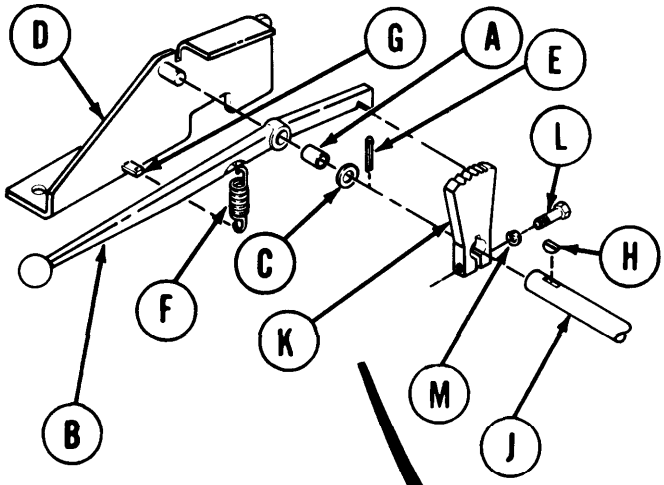

6. Aline segment (K) onto shaft (J). Using hammer, tap segment (K) lightly to install segment (K) onto shaft (J).
7. Using 7/16 inch wrench, install screw (L) and lockwasher (M) to segment (K)-
8. Aline the assembled throttle control handle assembly (N) to segment (K) and base floor (P).

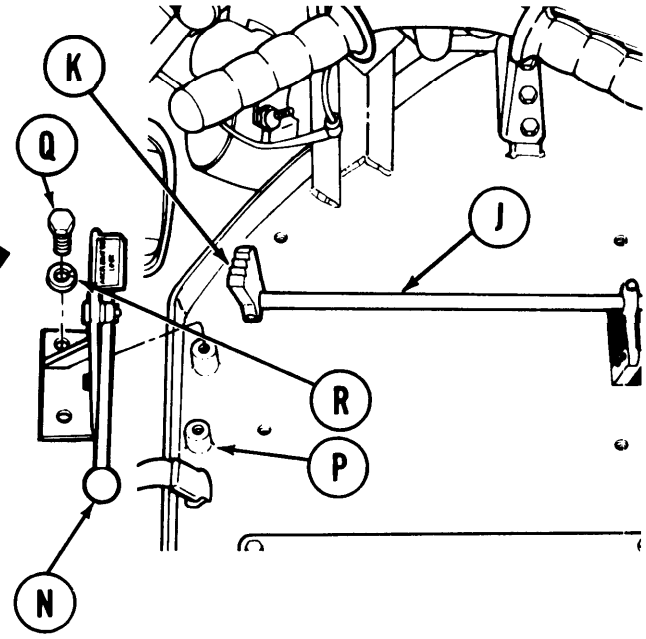

9. Using 9/16 inch socket, install two screws (Q) and lockwashers (R).

Go on to Sheet 4

TA248451

THROTTLE CONTROL HANDLE ASSEMBLY REPLACEMENT (Sheet 4 of 4)

10. Install bracket (S) in position.

11. Using 7/16 inch wrench, install four screws (T), lockwashers (U), and flat washers (V).

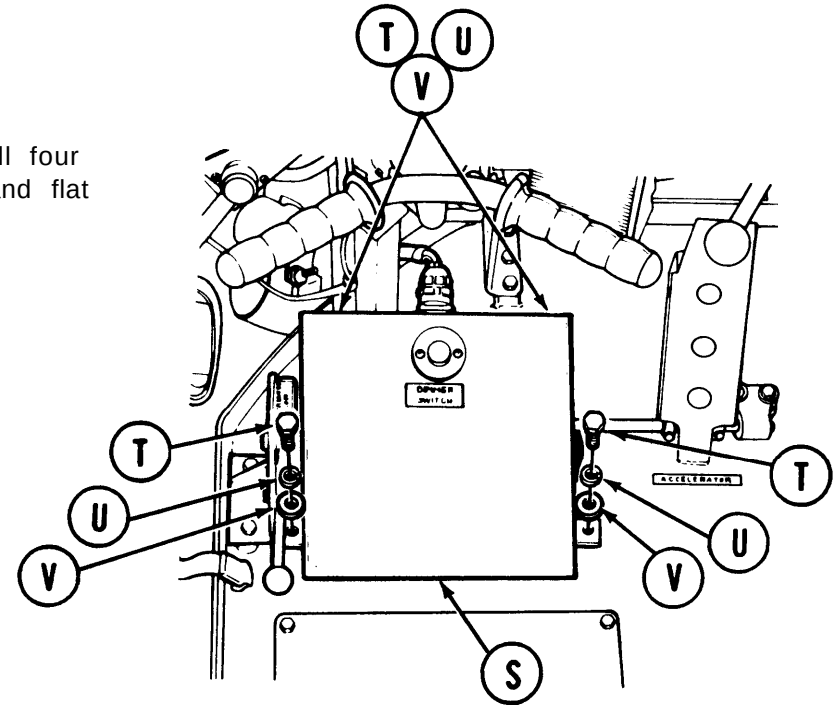

End of Task

TA248452

FUEL TANK REPAIR (Sheet 1 of 2)

TOOLS: 1/4 in. portable electric drill
1/8 in. dia. twist drill
6 in. steel rule

SUPPLIES: Accelerator and sealer (Item 64, Appendix D)
Dry cleaning solvent (Item 55, Appendix D)
Sandpaper (Item 52, Appendix D)
Grease (Item 37, Appendix D)
Container (to mix accelerator and sealer)
Rags (Item 65, Appendix D)
Gloves (Item 69, Appendix D)
Goggles (Item 70, Appendix D)

PRELIMINARY PROCEDURES: Remove powerplant (page 5-2)
Drain fuel tank to level approximately 3 in. below crack (page 7-184)

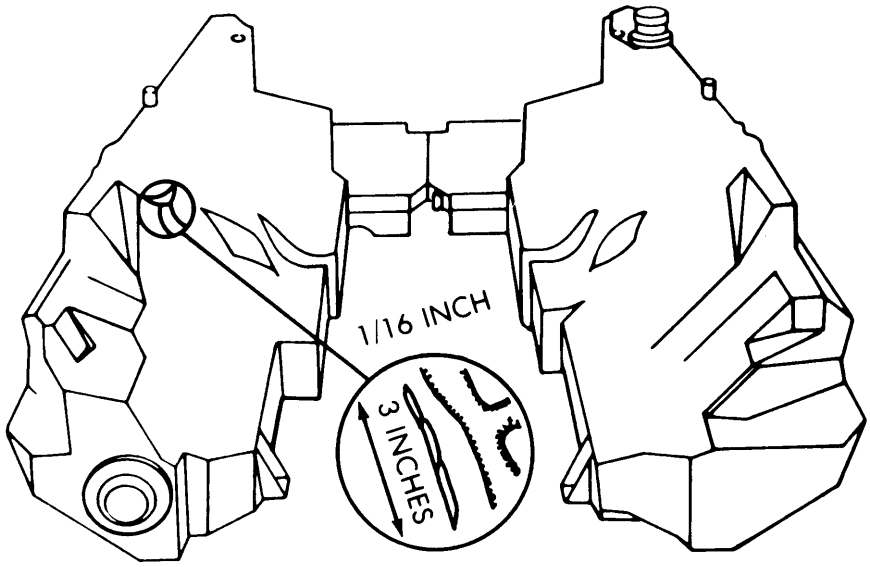

NOTE

Repair of minor cracks in fuel tanks (up to 3 inches long and 1/16 inch wide) can be made. Cracks in excess of these dimensions will be repaired by support maintenance.

Go on to Sheet 2

TA248453

FUEL TANK REPAIR (Sheet 2 of 2)

WARNING

Dry cleaning solvent P-D-680 is toxic and flammable. To prevent personal injury, wear protective goggles and gloves and use only in a well-ventilated area Avoid contact with skin eyes, and clothes and don't breathe vapors. Do not use near open flame or excessive heat. The flash point for Type #1 Dry Cleaning Solvent is 100°F (38°C) and for Type #2 is 138°F (50°C) If you become dizzy while using cleaning solvent, get fresh air immediately and get medical aid. If contact with eyes is made, wash your eyes with water and get medical aid immediately.

CLEANING:

1. Using dry cleaning solvent, clean area around crack to remove all traces of dirt and grease. Wipe dry with cloths.
2. Using sandpaper, sand area around crack for proper adhesion of sealer. Wipe with cloth after sanding.

REPAIR:

1. Using ruler, mark spot to bore hole 1/2 to 1 inch from ends of crack on a line with crack.
2. Coat drill bit with grease to minimize amount of metal chips falling into fuel tank.
3. Using drill, bore hole about 1/2 to 1 inch from visible ends of crack as shown.

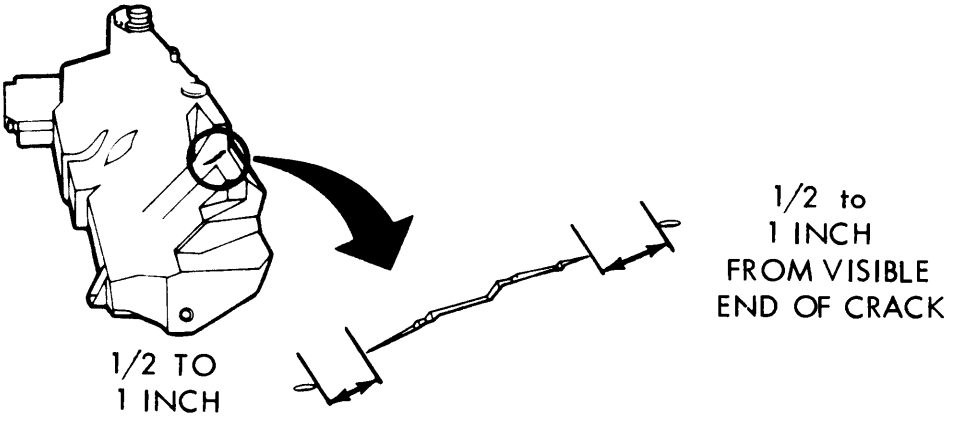

4. Clean crack and surrounding area with cloth dampened in dry cleaning solvent. Wipe dry. Do not allow fingerprints, oil, or moisture on cleaned surface.

NOTE

Do not apply sealer at temperatures below 45 degrees F. Sealer will cure in approximately 24 hours at room temperature.

5. Mix accelerator and sealer in container.
6. Apply 3/16 inch thickness of sealer to cleaned surface and at least 1/2 inch beyond crack.
7. Install powerplant (page 5-14).

End of Task

TA248454

FUEL TANK (RIGHT') REPLACEMENT (Sheet 1 of 15)

PROCEDURE INDEX

PROCEDURE	PAGE
Removal	7-333
Installation	7-341

TOOLS:
1-5/8 in. open end wrench
15/16 in. combination box and open end wrench (2 required)
Ratchet with l/2 in. drive
1/2 in. socket with 1/2 in. drive
1/2 in. combination box and open end wrench
7/8 in. combination box and open end wrench
9/16 in. combination box and open end wrench
1-1/8 in. open end wrench
9/16 in. socket with 1/2 in. drive
7/16 in. socket with 1/2 in. drive
1-7/16 in. open end wrench
1-1/2 in. open end wrench
8 in. adjustable wrench
6 in. ruler
Putty knife

SUPPLIES:
Spacers
Dry cleaning solvent (Item 55, Appendix D)
Adhesive (Item 4, Appendix D)
Rags (Item 65, Appendix D)
Seals
Sealing compound (Item 23, Appendix D)
Lockwashers
Gloves (Item 69, Appendix D)
Goggles (Item 70, Appendix D)
Masking Tape (Item 58, Appendix D)

PERSONNEL: Four

REFERENCES: TM 5-5420-202-10

PRELIMINARY PROCEDURE:
Remove powerplant (page 5-2)
Remove right air intake assembly (page 7-65)
Remove number four left and number four right and number five left and number five right torsion bars (page 14-24)
Drain fuel tanks (page 7-184)
Remove right bulkhead access cover (page 17-2)

WARNING

- Fuel is very flammable and can explode easily. To avoid serious injury or death, keep fuel away from open fire and keep fire extinguisher within easy reach when working with fuel. Do not work on fuel system when engine is hot. Fuel can be ignited by hot engine. When working with fuel, post signs that read "NO SMOKING WITHIN 50 FEET OF VEHICLE."
- Fuel tank weighs about 125 pounds. Injury to personnel or damage to equipment could result through careless handling. Four person lift is required. Failure to follow these instructions may result in injury to personnel or damage to equipment.

Go on to Sheet 2

FUEL TANK (RIGHT) REPLACEMENT (Sheet 2 of 15)

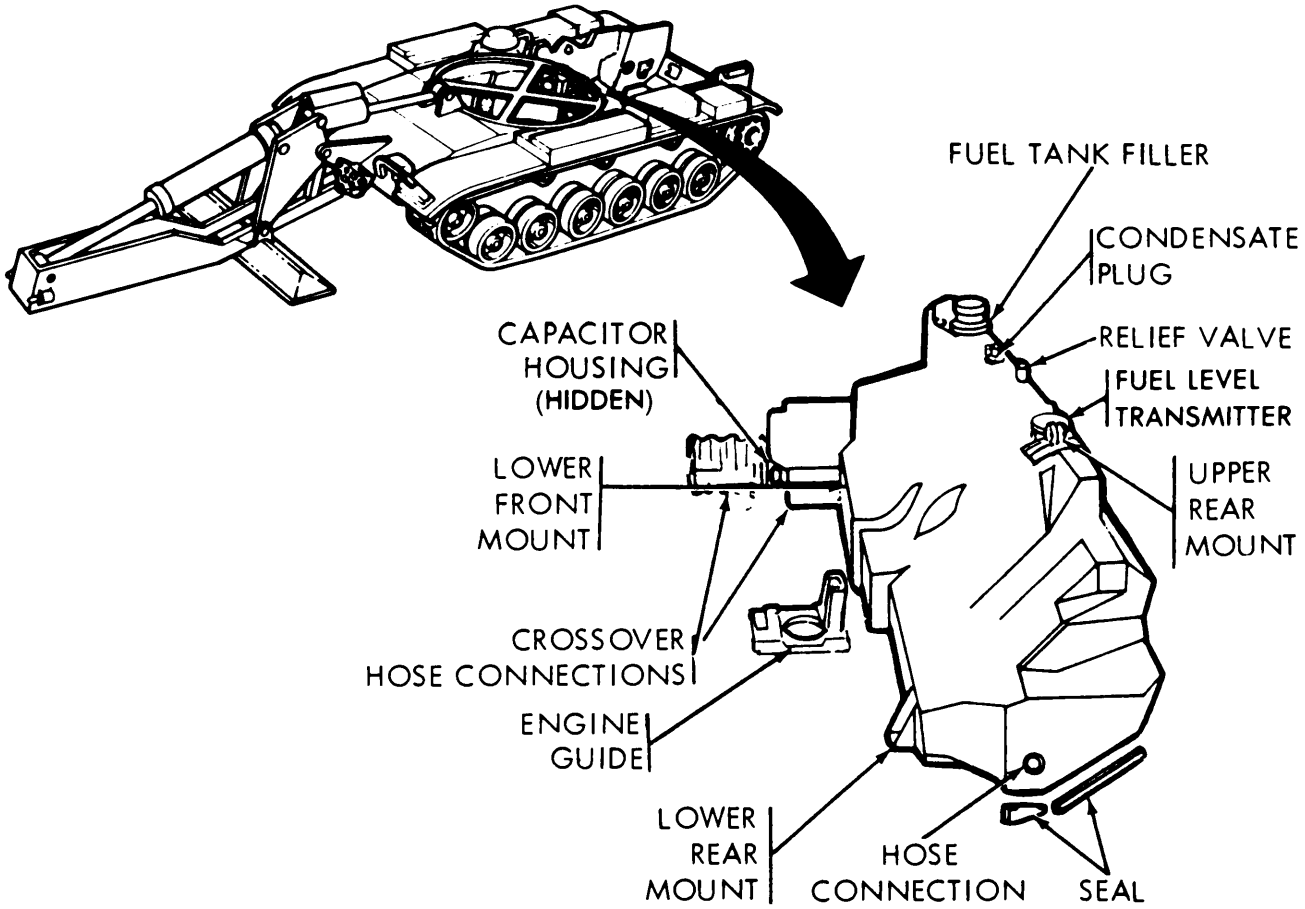

REMOVAL:

1. Disconnect electrical lead (A) from fuel level transmitter (B).

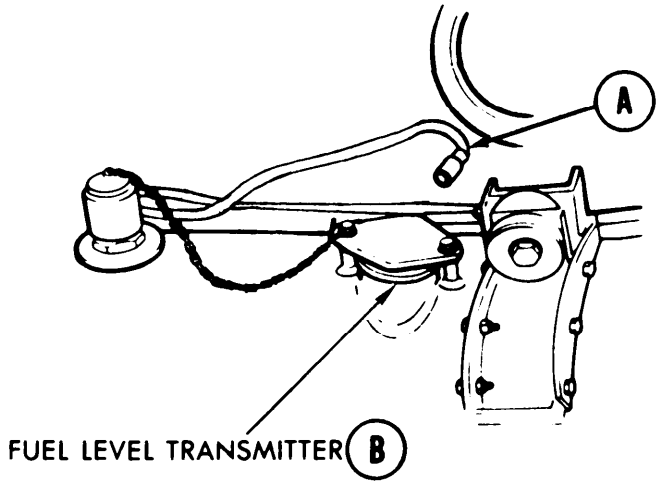

Go on to Sheet 3

TA250888

FUEL TANK (RIGHT) REPLACEMENT (Sheet 3 of 15)

2. Using 1-1/2 inch and 1-5/8 inch wrenches, disconnect fuel return line hose (C) from tube assembly coupling (D).

3. Using 1/2 inch socket, remove screw (E) securing hose clamp to hull.

4. Using 1-7/16 inch wrench, disconnect hose nut (F) and remove hose (C).

5. Using 15/16 inch wrench, remove four screws and lockwashers (G) securing right powerplant guide (H) to hull.

6. Remove guide from vehicle.

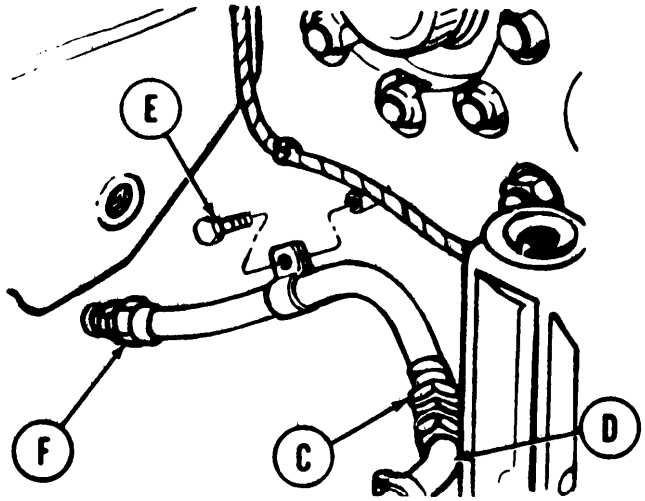

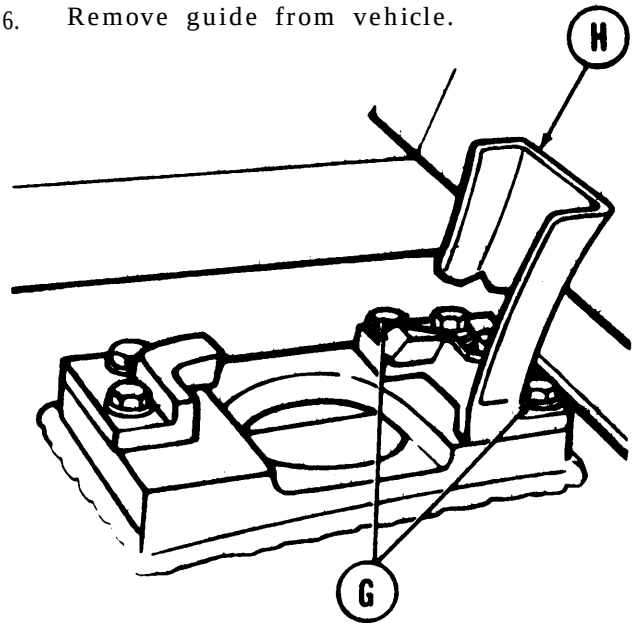

7. Open fuel filler cover (J) and remove fuel tank filter assembly from tank. (TM 5-5420-202-10)

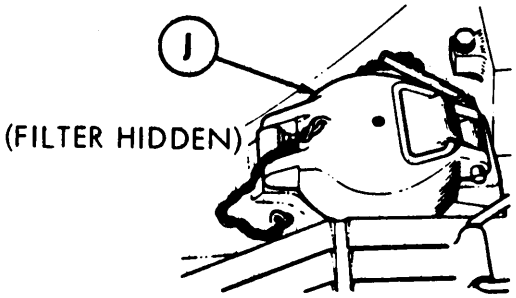

NOTE

Fuel may leak; have drip pan ready.

8. Using 1-1/8 inch wrench, disconnect fuel hose coupling (K) from elbow on fuel tank.

9. Remove fuel isolation valve assembly (L) with hose and flange (M)- (page 7-145).

10. Using 7/8 inch wrench, disconnect two fire extinguisher lines couplings (N) from manifold (P).

11. Using 1/2 inch socket, remove clamp (Q) securing tube (R) to hull.

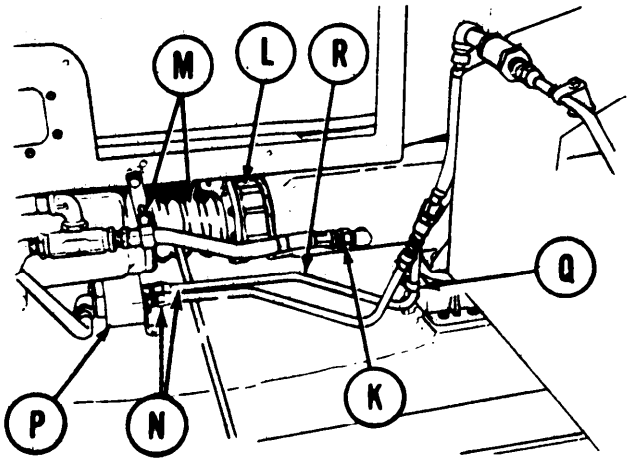

Go on to Sheet 4

TA250889

FUEL TANK (RIGHT) REPLACEMENT (Sheet 4 of 15)

12. Using 1/2 inch socket, remove screws (S) holding fire extinguisher tube and clamps to tank. Remove the tube assembly (T) from tank.

13. Disconnect electrical connector (U) from capacitor housing (V).

14. Using 7/16 inch socket, remove screws and washers securing two cable clamps (W). Position cable and clamps aside.

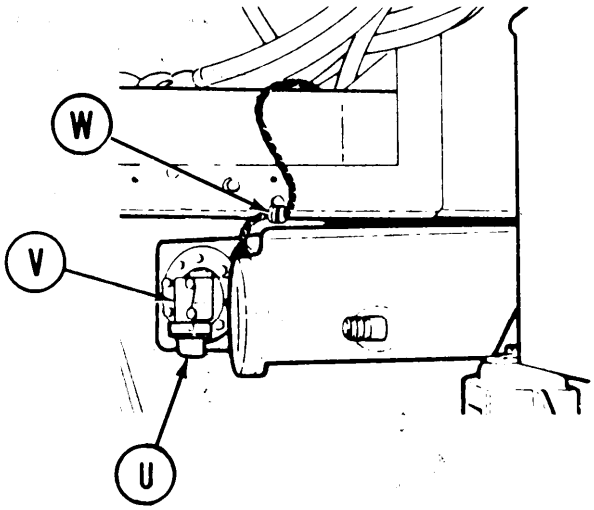

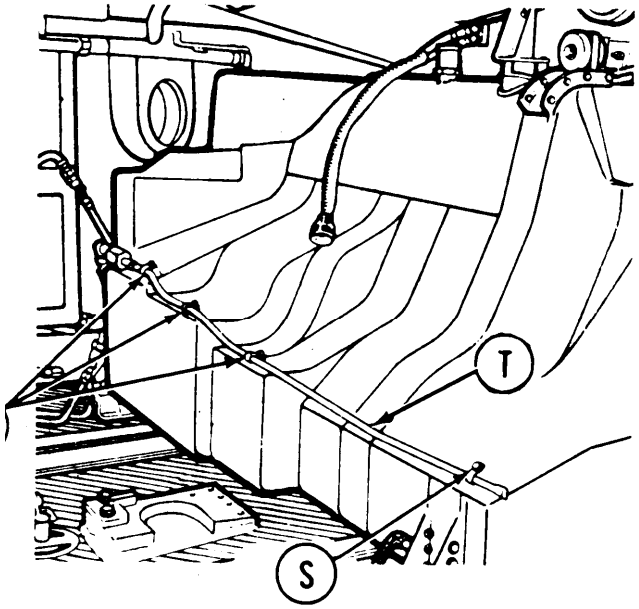

15. Using 1-1/2 inch wrench and adjustable wrench, disconnect fuel vent hose (X) from couplings (Y) and remove.

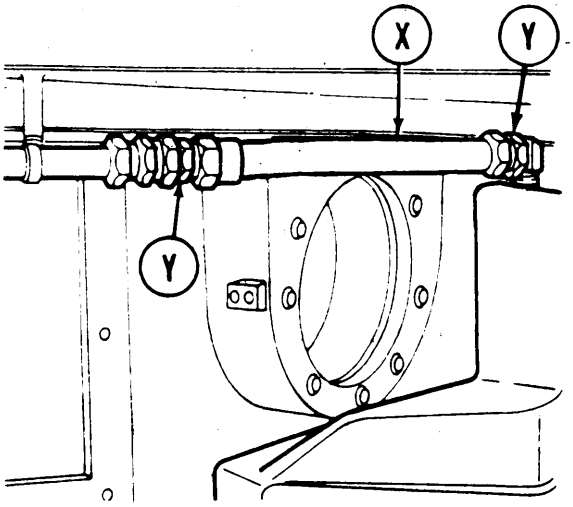

Go on to Sheet 5

FUEL TANK (RIGHT) REPLACEMENT (Sheet 5 of 15)

NOTE

Step 16 must be done inside crew compartment.

16. Using 15/16 inch wrench, remove nut (Z) and lockwasher (AA) securing upper front mount (AB) to bulkhead.

17. Move back to engine compartment.

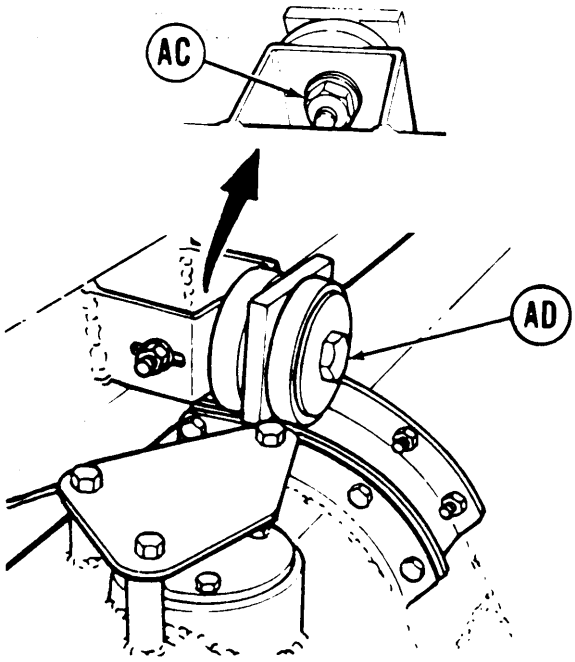

UPPER REAR MOUNT

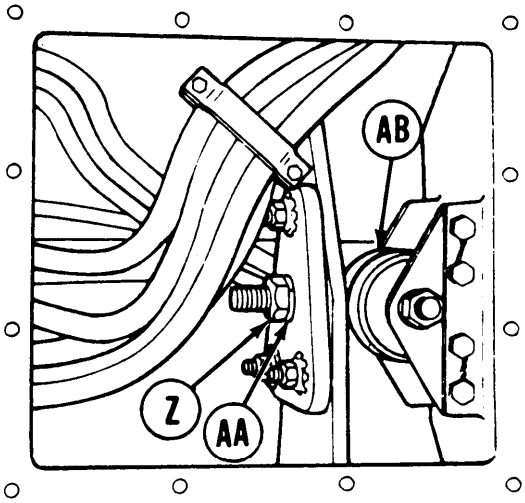

UPPER FRONT MOUNT

18. Using two 15/16 inch wrenches, remove nut and washers (AC). Remove screw, two washers, and two rubber mounts (AD).

19. Using 9/16 inch wrench, remove two screws, two washers, and one lockwasher (AE).

20. Using 1/2 inch wrench, remove screw and lockwasher (AF) securing ground strap (AG) to fuel tank. Remove ground strap (AG).

21. Using adjustable wrench, remove elbow (AH) from fuel tank.

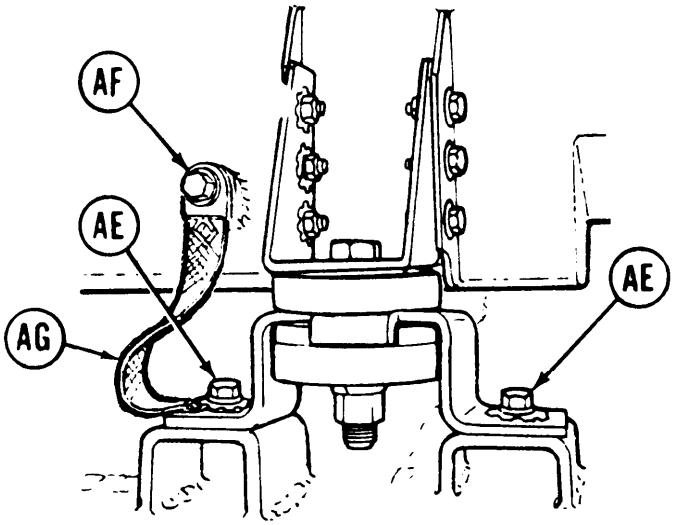

LOWER REAR MOUNT

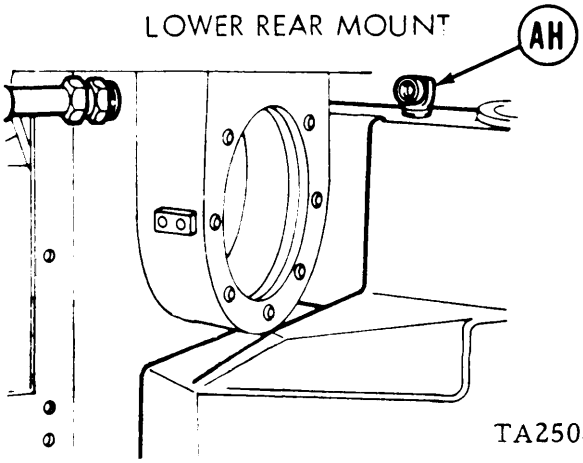

TA250891

Go on to Sheet 6

FUEL TANK (RIGHT) REPLACEMENT (Sheet 6 of 15)

21. Using 1/2 inch socket or 1/2 inch wrench, remove four screws and washers (AJ) securing mount (AK) and bracket (AL) to hull.

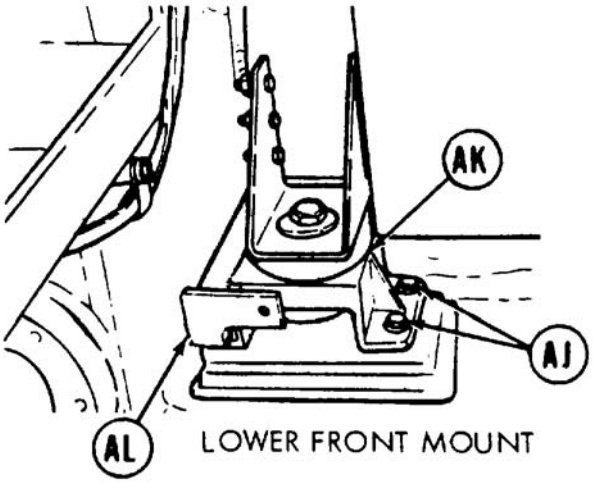

CAUTION

- **Fuel tank is fabricated of aluminum and is therefore subject to damage from sharp objects. Use utmost care during handling. Do not force tank with poles or bars as damage may result.**
- **During disassembly, several tank openings may be exposed. Close these openings with masking tape to prevent entry of foreign matter.**

22. Using three persons, pivot fuel tank toward center of hull while slowly moving fuel tank rearward until rear end of fuel tank clears curve in hull.

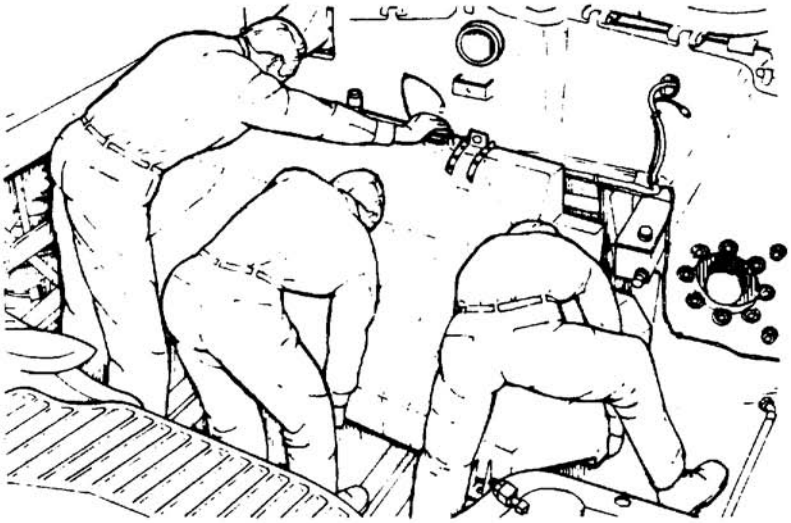

NOTE

Flat lower front section of fuel tank must be held horizontal while under crew compartment floor to avoid binding.

TA250892

Go on to Sheet 7

FUEL TANK (RIGHT) REPLACEMENT (Sheet 7 of 15)

23. Continue moving fuel tank to rear until front section is clear of crew compartment floor.

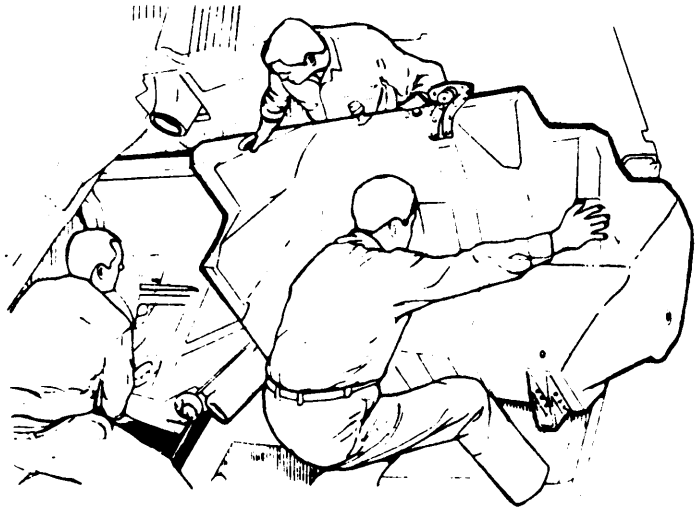

24. Using four persons, remove fuel tank from vehicle.

WARNING

When draining or filling fuel tank, post notice that smoking is not allowed in or near vehicle. Fuel is flammable.

NOTE

A small amount of fuel may still be in the fuel tank. Drain into container by tilting fuel tank

WARNING

Dry cleaning solvent P-D-680 is toxic and flammable. To prevent personal injury, wear protective goggles and gloves and use only in a well-ventilated area. Avoid contact with skin, eyes, and clothes and don't breathe vapors. Do not use near open flame or excessive heat. The flash point for Type #1 Dry Cleaning Solvent is 100°F (38°C) and for Type #2 is 138°F (50°C). If you become dizzy while using cleaning solvent, get fresh air immediately and get medical aid. If contact with eyes is made, wash your eyes with water and get medical aid immediately.

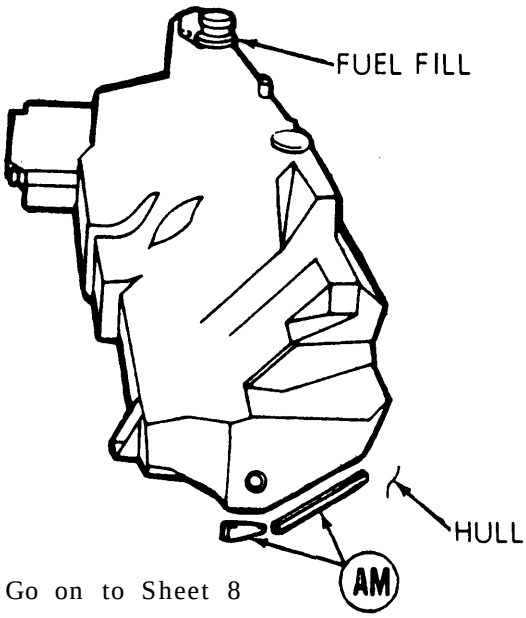

25. Use putty knife and dry cleaning solvent to remove seals (AM) from hull. Clean area of all adhesive and mask area on hull where seals had been.

NOTE

If fuel tank is to be repaired, go to page 7-331. If fuel tank is to be replaced, go to step 26.

TA250893

Go on to Sheet 8

FUEL TANK (RIGHT) REPLACEMENT (Sheet 8 of 15)

26. Remove fuel tank upper front mount (page 7-388).

27. Remove fuel tank upper rear mount (page 7-394).

28. Remove fuel tank lower rear mount (page 7-377).

29. Remove fuel tank lower front mount (page 7-387.

30. Remove capacitor housing (page 10-326).

31. Remove right fuel pump (page 7-5).

32. Remove condensate plug and plug adapter (page 7-131).

33. Remove fuel level transmitter (page 7-141).

34. Using adjustable wrench, remove elbow (AN) from fuel tank.

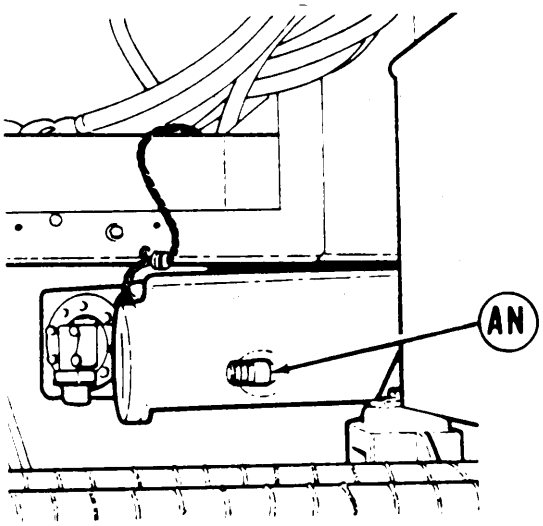

Go on to Sheet 9

TA250894

FUEL TANK (RIGHT) REPLACEMENT (Sheet 9 of 15)

INSTALLATION:

1. If required, use adhesive to install new seals (A) and (B) in marked position on hull.

NOTE

If fuel tank was removed for repair, go to page 7-331. If fuel tank to be installed is a new fuel tank, go to step 2.

2. Install upper front mount bracket on fuel tank (page 7-391).

3. Install upper rear mount bracket on fuel tank (page 7-396).

4. Apply sealing compound to male threads of elbow (C) and, using adjustable wrench, install elbow (C) in tank (D). Tighten to position shown.

5. Install fuel tank lower front mount (page 7-387, steps 1 through 6).

6. Install fuel tank lower rear mount (pages 7-379, 7-380, steps 1 through 9).

7. Install fuel tank upper front mount (page 7-392, steps 6 through 9).

8. Install fuel tank upper rear mount (page 7-396, steps 1 and 7).

9. Install right fuel pump (page 7-5).

10. Install capacitor housing (page 10-326).

11. Install fuel level transmitter (page 7-141).

12. Install air cleaner valve (page 10-164).

13. Install air cleaner valve hose (page 7-85).

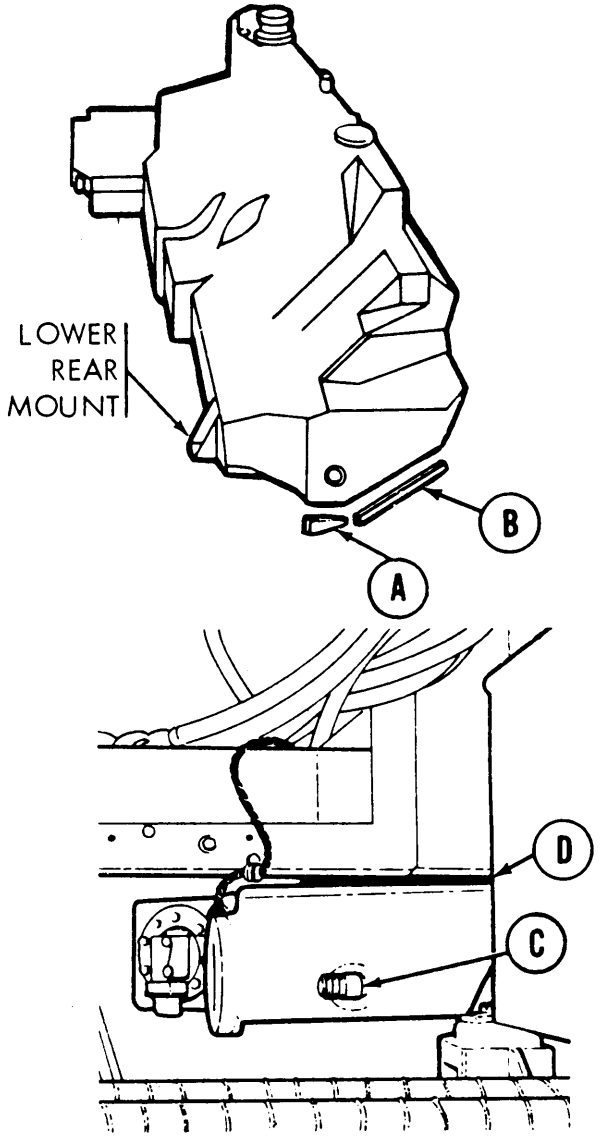

Go on to Sheet 10

TA250895

FUEL TANK (RIGHT) REPLACEMENT (Sheet 10 of 15)

14. Install condensate plug adapter and condensate plug (page 7-131).

CAUTION

Do not use pry bars or wood poles to force fuel tank into place. Take care not to scrape, puncture, or otherwise damage tank.

15. Using four persons, place fuel tank into the vehicle.

NOTE

Flat lower front section of fuel tank must be held horizontal while under crew compartment floor to avoid binding.

16. Using three persons, place fuel tank into position shown with the front section of the tank just under the crew compartment floor.

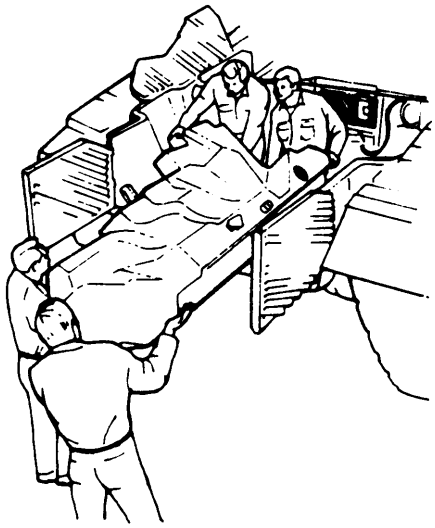

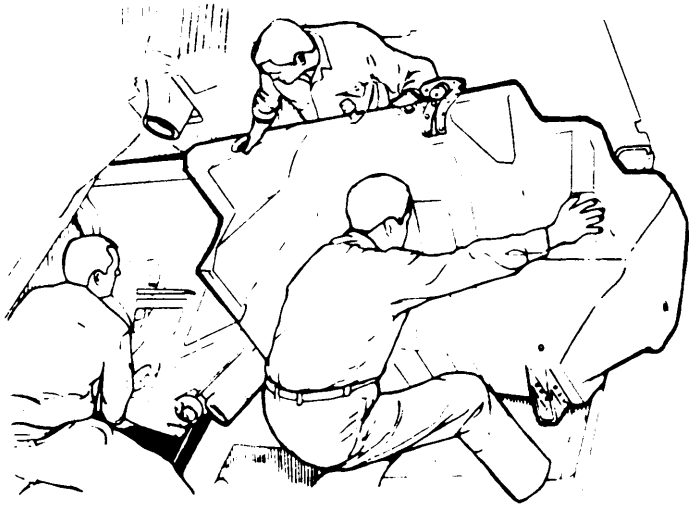

Go on to Sheet 11

TA250896

FUEL TANK (RIGHT) REPLACEMENT (Sheet 11 of 15)

NOTE

Make sure the front section of fuel tank does not bind when moving fuel tank into position.

17. Pivot fuel tank toward hull while moving fuel tank forward until curve of hull is cleared and fuel tank is in position against hull.

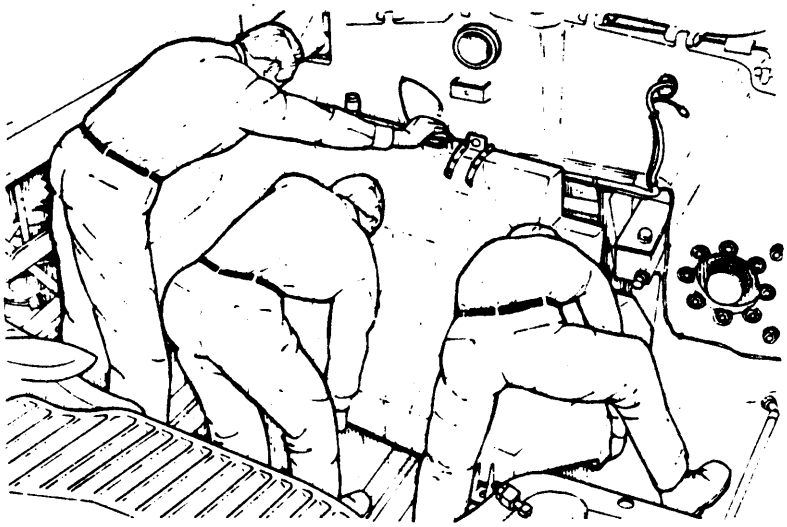

18. Have fourth person aline top front mount (E) with hole in bulkhead plate (F). Make sure flat washer (G) and new lockwasher (H) and nut (J) are on eye bolt and move fuel tank forward until washer on eye bolt is seated against bulkhead.

19. Using 15/16 inch wrench, adjust nut (J) as required to obtain 1/2 inch clearance between bulkhead (K) and fuel tank (L).

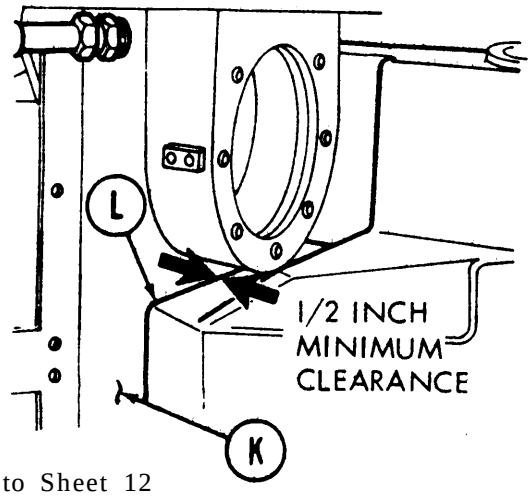

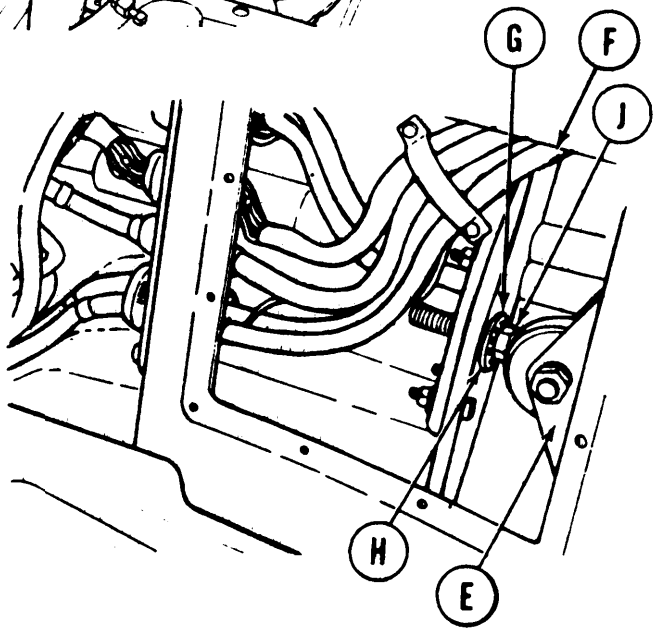

VIEW INSIDE CREW COMPARTMENT

Go on to Sheet 12

TA250897

FUEL TANK (RIGHT) REPLACEMENT (Sheet 12 of 15)

20. Using 1/2 inch socket, install four screws (M) and new lockwashers (N) securing lower front mount (P) and bracket (Q) to hull.

21. Using 15/16 inch wrench, install new lockwasher (R) and nut (S) onto mount (F).

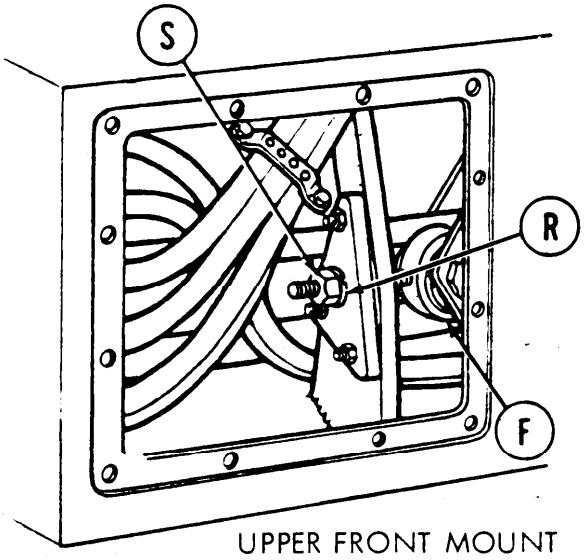

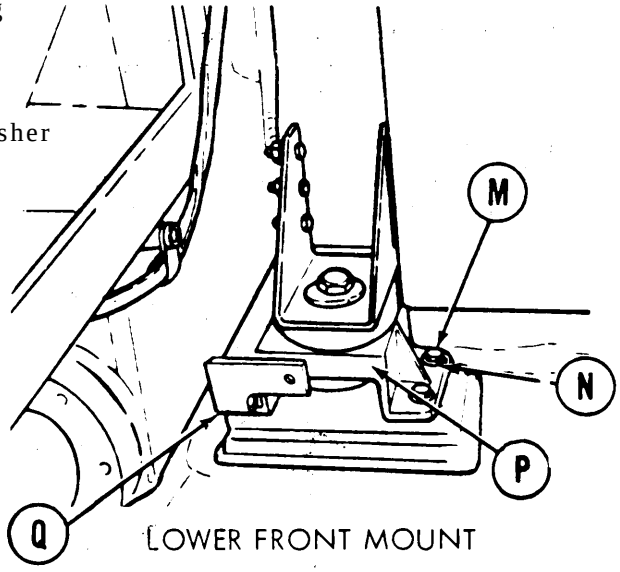

22. Using 9/16 inch socket, install new lockwasher and flat washer (T) and screw (U) securing one end of ground strap (V) and mount (W) to hull.

23. Using 1/2 inch socket, install other end of ground strap (V) to fuel tank using screw (X) and new lockwasher (Y).

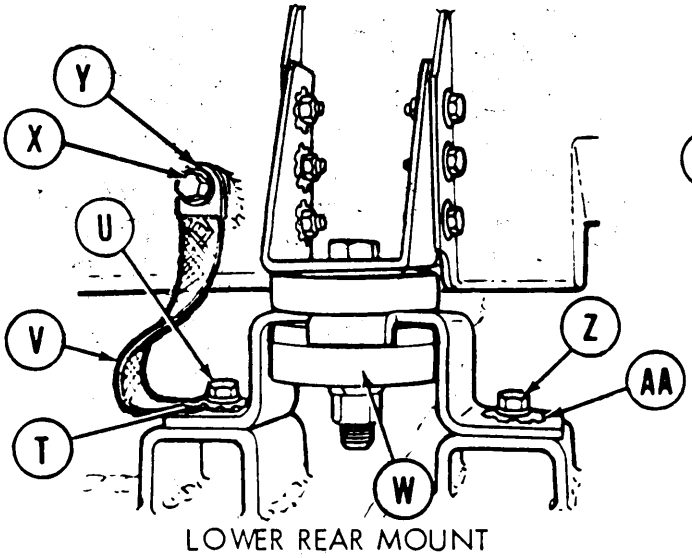

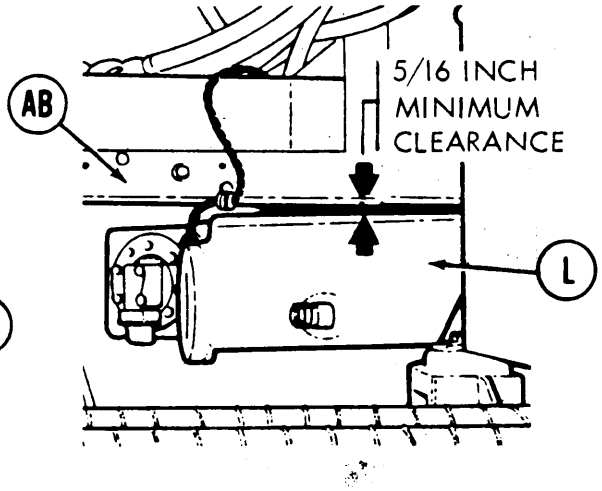

24. Using 9/16 inch socket, install screw (Z) and new lockwasher (AA) securing mount (W) to hull.

25. If required, install spacers under lower rear mount to obtain 5/16 inch clearance between fuel tank (L) and vehicle wall (AB).

TA250898

Go on to Sheet 13

FUEL TANK (RIGHT) REPLACEMENT (Sheet 13 of 15)

26. Using 15/16 inch wrench, tighten nut (S).

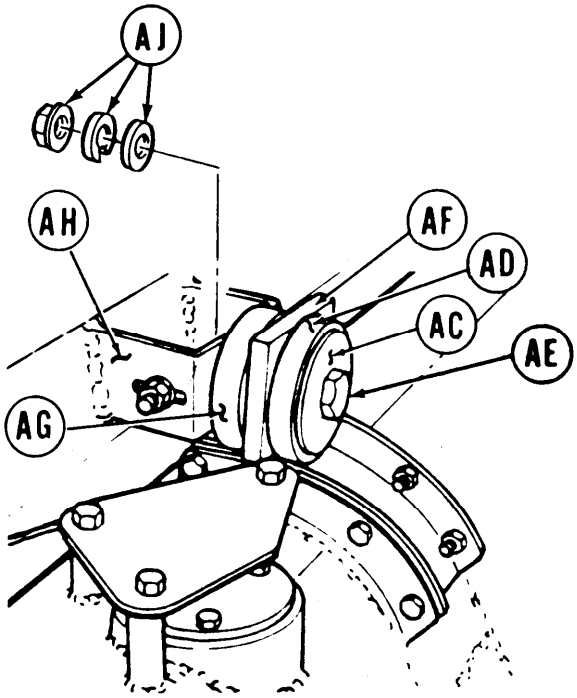

UPPER REAR MOUNT

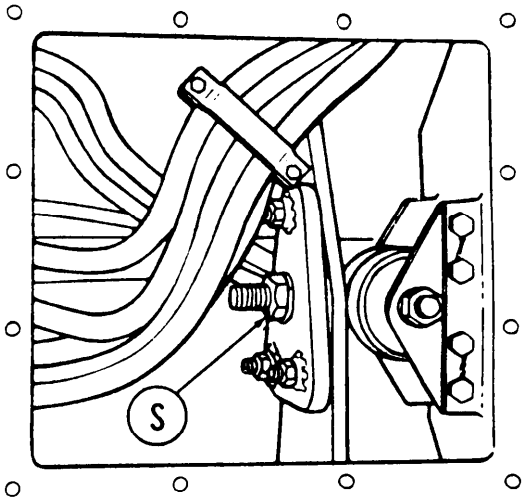

UPPER FRONT MOUNT

27. Position washer (AC) and rubber mount (AD) onto screw (AE). Position screw (AE) through hole in bracket (AF) and through rubber mount and washer (AG).

28. Push screw (AE) through hole in hull mount (AH), install two washers and nut (AJ) on screw (AE) and tighten using two 15/16 inch wrenches.

29. Install right bulkhead access cover (page 17-2).

Go on to Sheet 14

TA250899

FUEL TANK (RIGHT) REPLACEMENT (Sheet 14 of 15)

30. Install connector (AK) on capacitor housing (AL).

31. Using 7/16 inch socket, install screws and washers to secure two clamps (AM).

32. Install fuel isolation valve assembly (AN) and hose (AP) (page 7-145).

33. Using 1-1/8 inch wrench, install hose coupling (AQ) onto elbow (AR).

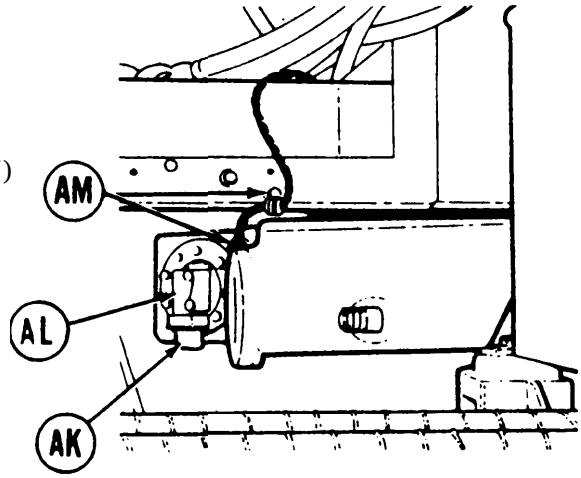

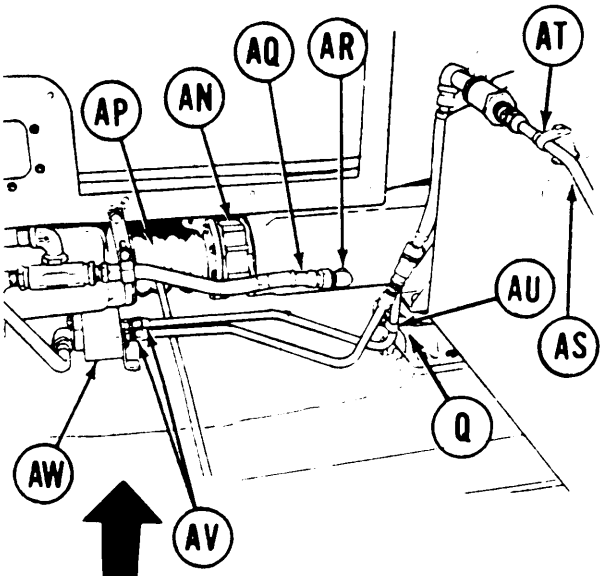

34. Using 1/2 inch socket, position and secure fire extinguisher tube assembly (AS) to fuel tank with four clamps (AT).

35. Position short fire extinguisher tube assembly clamp (AU) to bracket (Q). Using 1/2 inch socket, install screw to secure clamp (AU)

36. Using 7/16 inch wrench, connect two couplings (AV) to manifold (AW).

37. Using 15/16 inch wrench, install powerplant guide (AX) with four screws and new lockwashers.

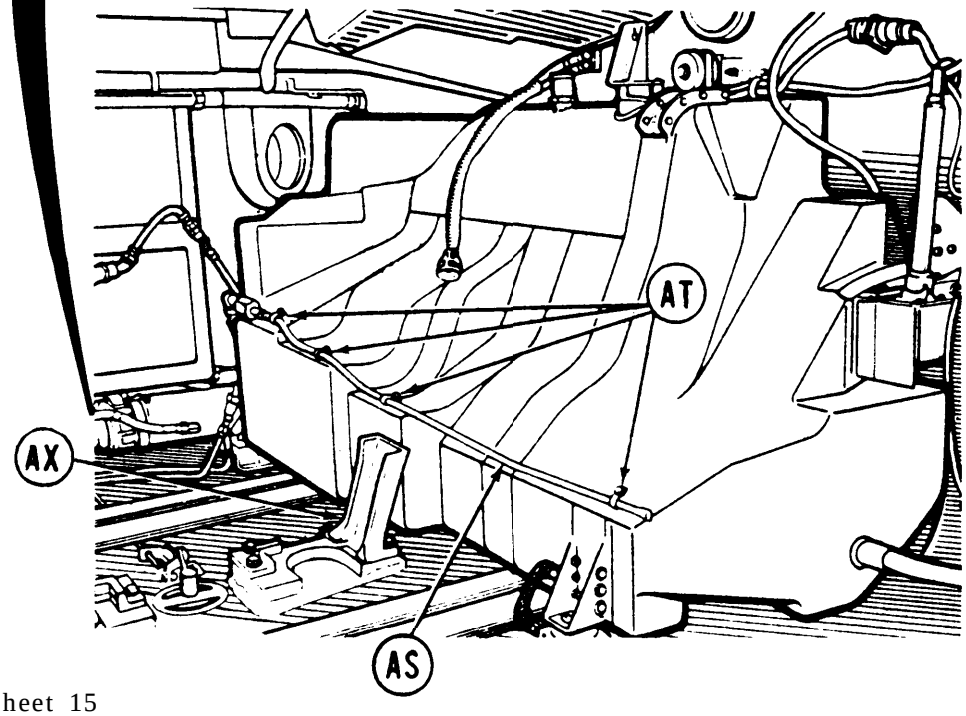

Go on to Sheet 15

TA250900

FUEL TANK (RIGHT) REPLACEMENT (Sheet 15 of 15)

38. Using 7/8 inch wrench, install elbow (AY) in fuel tank.

39. Using 1-1/2 inch wrench, connect fuel vent hose (AZ) onto coupling (BA) and elbow (AY).

40. Open fuel cap and install fuel tank filter assembly (page 16-9).

41. Using 1-7/16 inch wrench, install fuel return hose (BB) fitting into fuel tank (L) (at rear of fuel tank.)

42. Using 1-1/2 inch and 1-5/8 inch wrenches, connect fuel return line hose (BB) to tube assembly (BC) coupling.

43. Using 1/2 inch socket, install screw (BD) securing clamp (BE).

44. Connect electrical lead (BF) to fuel level transmitter.

45. Fill fuel tanks and check for leaks (TM 5-5420-202-10).

46. Install number four and five torsion bars (page 14-27).

47. Install right air intake assembly page 7-68).

48. Install powerplant (page 5-14).

49. Bleed fuel system (page 5-25).

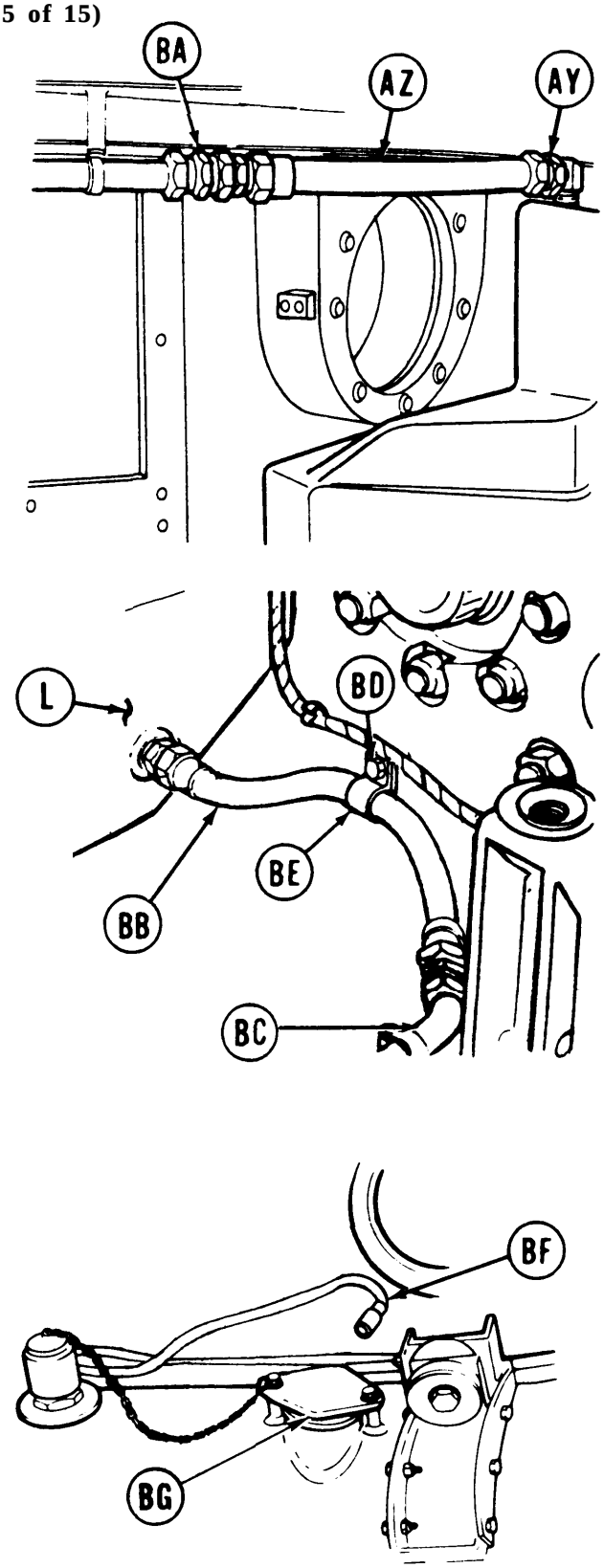

End of Task

TA250901

FUEL TANK (LEFT) REPLACEMENT (Sheet 1 of 16)

PROCEDURE INDEX

PROCEDURE	PAGE
Removal	7-349
Installation	7-356

TOOLS: Torque wrench with 1/2 in. drive (0-175 lb-ft (0-237 N·m
Putty knife
15/16 in. combination box and open end wrench (2 required)
1 in. combination box and open end wrench
1-1/2 in. open end wrench
Ratchet with 1/2 in. drive
9/16 in. socket with 1/2 in. drive
8 in. adjustable wrench
1-1/8 in. open end wrench
1/2 in. combination box and open end wrench
9/16 in. combination box and open end wrench (2 required)
7/16 in. socket with 1/2 in. drive
1/2 in. socket with 1/2 in. drive
7/8 in. combination box and open end wrench 15/16 in. crowfoot

SUPPLIES:
Rags (Item 65, Appendix D)
Spacers
Dry cleaning solvent (Item 55, Appendix D)
Adhesive (Item 4, Appendix D)
Sealing compound (Item 23, Appendix D)
Seals
Lockwashers
Plug (MS14314-5X or equivalent 3/4 inch NPT)
Gloves (Item 69, Appendix D)
Goggles (Item 70, Appendix D)
Drain Pan
Masking tape (Item 58, Appendix D)

PERSONNEL: Four

REFERENCES: TM 5-5420-202-20

PRELIMINARY PROCEDURE:
Remove powerplant (page 5-2)
Remove left air intake assembly (page 7-65)
Remove number four (left and right) torsion bars (page 14-24)
Drain fuel tanks (page 7-184)
Remove fuel shutoff cable (page 7-364)
Remove left bulkhead access cover (page 17-2)

WARNING

- Fuel is very flammable and can explode easily. To avoid serious injury or death, keep fuel away from open fire and keep fire extinguisher within easy reach when working with fuel. Do not work on fuel system when engine is hot. Fuel can be ignited by hot engine. When working with fuel, post signs that read "NO SMOKING WITHIN 50 FEET OF VEHICLE."
- Fuel tank weighs about 125 pounds. Injury to personnel or damage to equipment could result through careless handling. Four person lift is required. Failure to follow these instructions may result in injury to personnel or damage to equipment.

Go on to Sheet 2

FUEL TANK (LEFT) REPLACEMENT (Sheet 2 of 16)

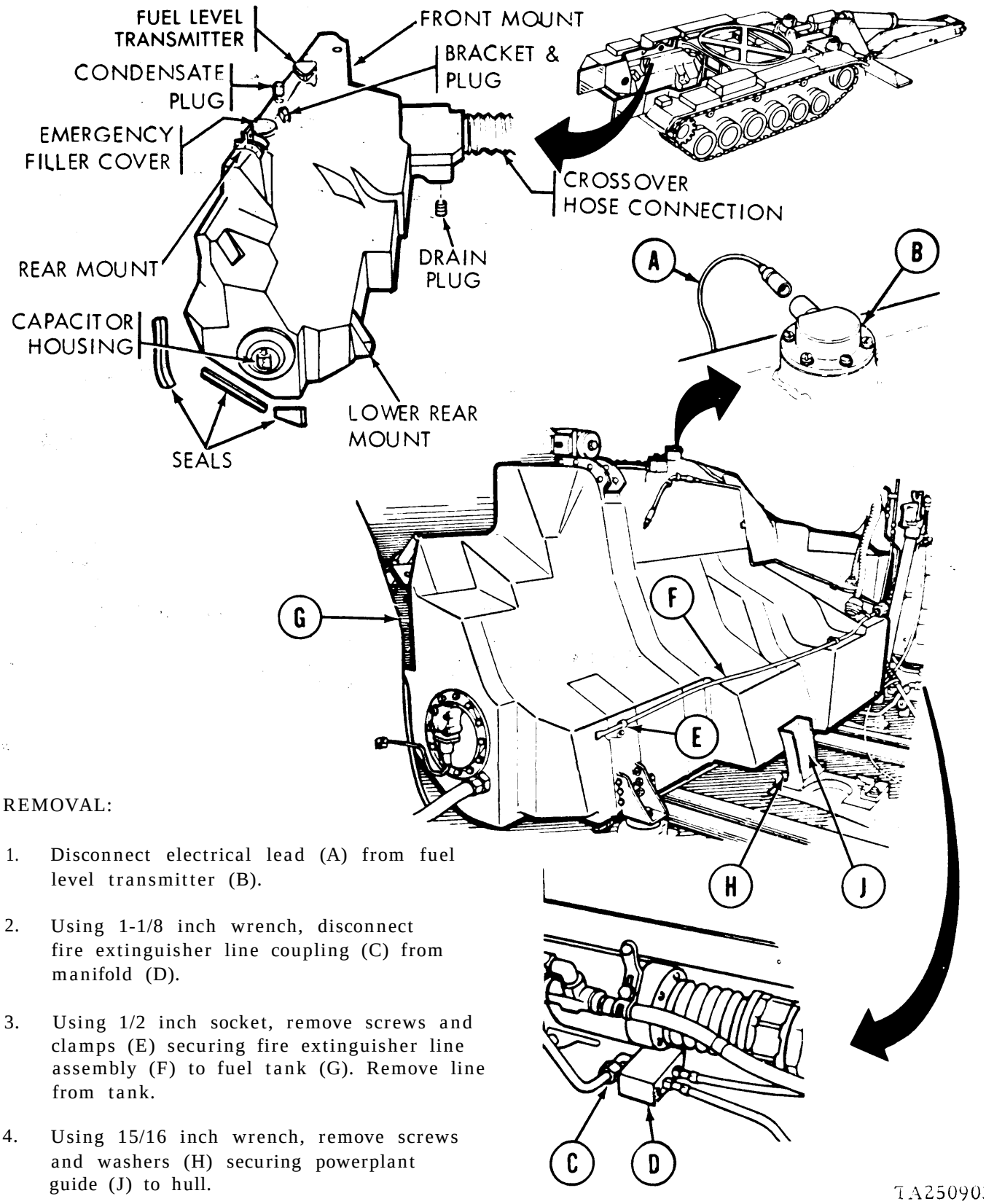

REMOVAL:

1. Disconnect electrical lead (A) from fuel level transmitter (B).

2. Using 1-1/8 inch wrench, disconnect fire extinguisher line coupling (C) from manifold (D).

3. Using 1/2 inch socket, remove screws and clamps (E) securing fire extinguisher line assembly (F) to fuel tank (G). Remove line from tank.

4. Using 15/16 inch wrench, remove screws and washers (H) securing powerplant guide (J) to hull.

Go on to Sheet 3

FUEL TANK (LEFT) REPLACEMENT (Sheet 3 of 16)

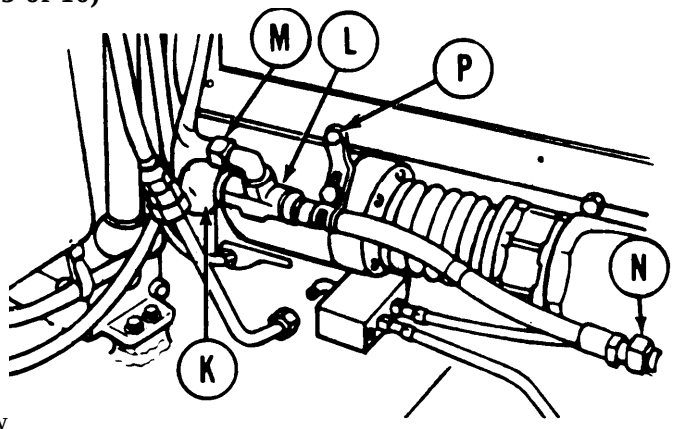

5. Using 1 inch wrench, disconnect tube assembly coupling (K) from check valve (L).

6. Using 1-1/8 inch wrench, disconnect coupling (M) from check valve (L).

7. Using 1-1/8 inch wrench, disconnect coupling (N) from right fuel tank (G).

8. Using 9/16 inch socket, remove capscrew and washers (P) securing valve and hose assembly to the forward wall. Remove check valve (L) with hose assembly from vehicle.

NOTE

Use pan and rags to catch any fuel when coupling is disconnected.

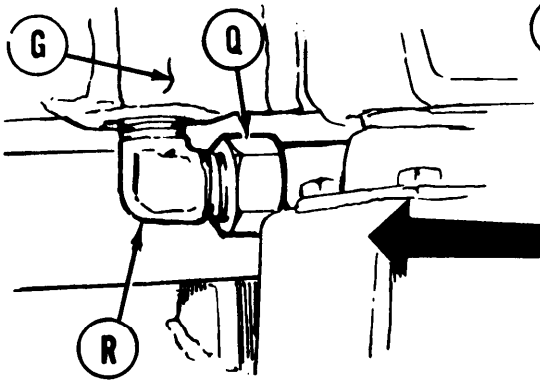

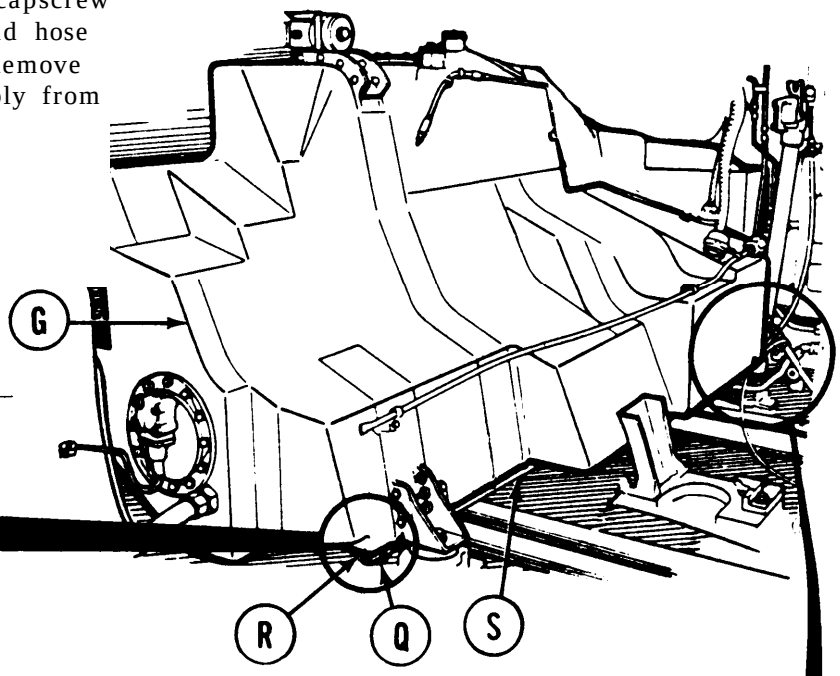

9. Using 1-1/8 inch wrench, disconnect coupling (Q) from elbow (R) connected to tube (S).

10. Using 7/16 inch socket, remove screw, lockwasher, and clamp (T) securing tube assembly (S) to fuel tank. Remove tube assembly (S) from tank (G).

11. Using adjustable wrench, remove elbow (R) from tank (G). Plug hole with pipe plug to stop any draining of fuel when fuel tank is moved.

12. Remove accelerator linkage assembly (page 7-322).

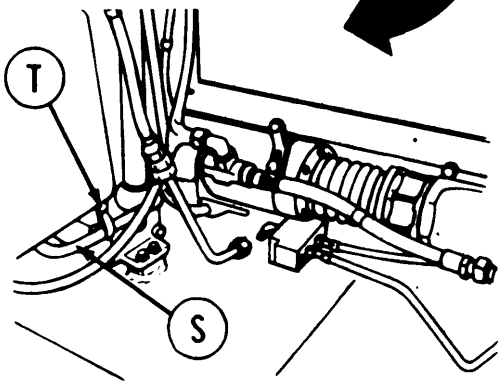

Go on to Sheet 4

TA250904

FUEL TANK (LEFT) REPLACEMENT (Sheet 4 of 16)

13. Using two 9/16 inch wrenches, disconnect the purge and main fuel line couplings (U).

14. Using 1/2 inch socket and 1/2 inch wrench, remove screw, nut, and washers (V) securing line to fuel tank (G).

15. Using 7/16 inch socket, remove two screws (W) securing clamps and purge line (X) to the tank (G). Remove line.

16. Remove electrical connector (Y) from capacitor housing (Z).

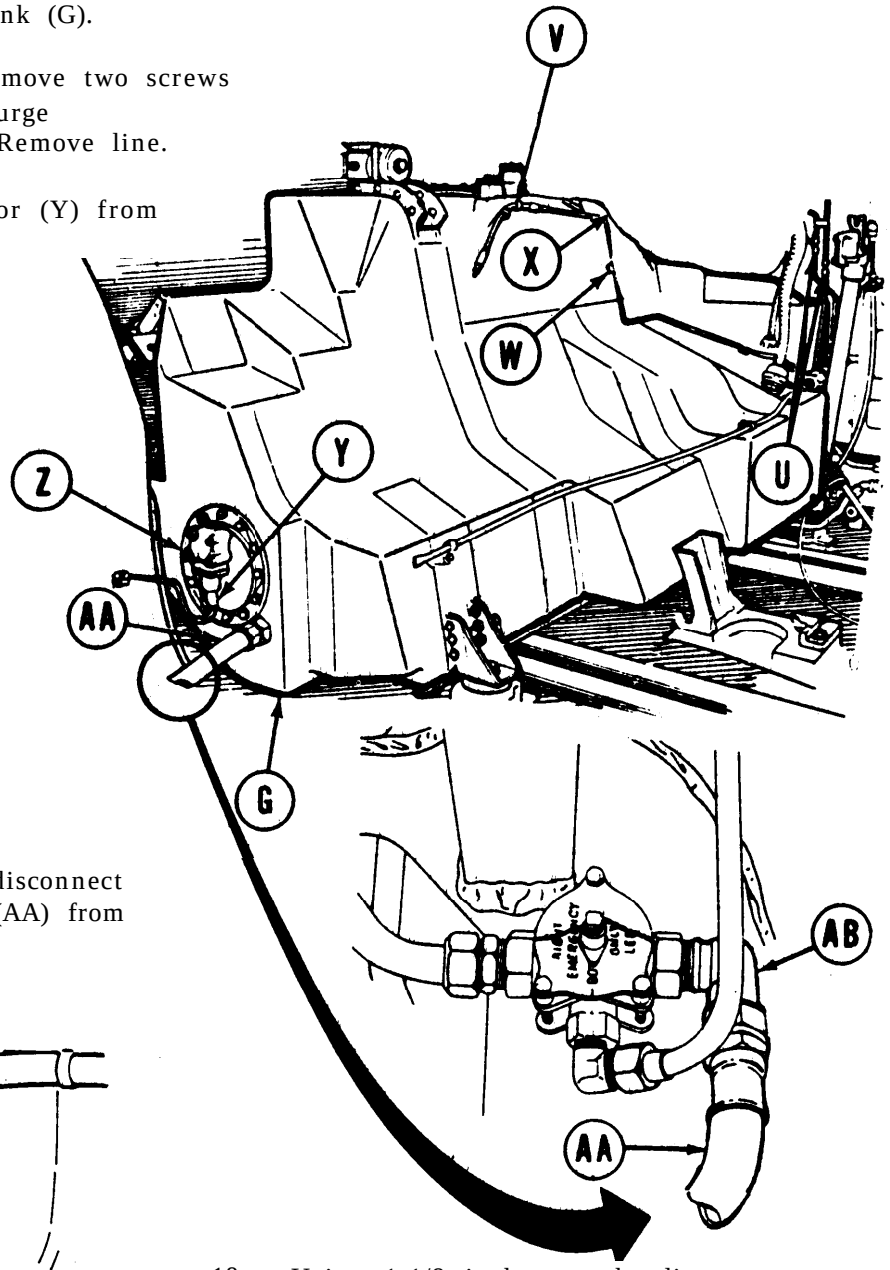

17. Using 1-1/8 inch wrench, disconnect fuel return hose assembly (AA) from fuel tank (G).

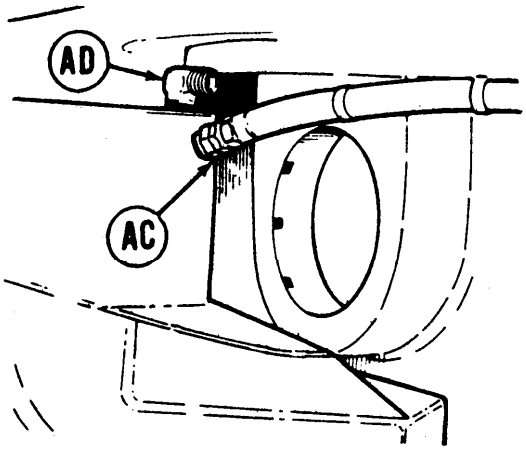

18. Using 1-1/8 inch wrench, disconnect hose assembly (AA) from elbow (AB) and remove from vehicle.

19. Using 1-1/2 inch wrench, disconnect fuel vent hose (AC) from elbow (AD).

Go on to Sheet 5

TA250905

FUEL TANK (LEFT) REPLACEMENT (Sheet 5 of 16)

20. Remove fuel tank crossover valve assembly and hose (page 7-145).

21. Using 15/16 inch wrench, remove nut (AE) and lockwasher (AF) securing upper front mount (AG) to bulkhead. Using 9/16 inch wrench, loosen three nuts (AH).

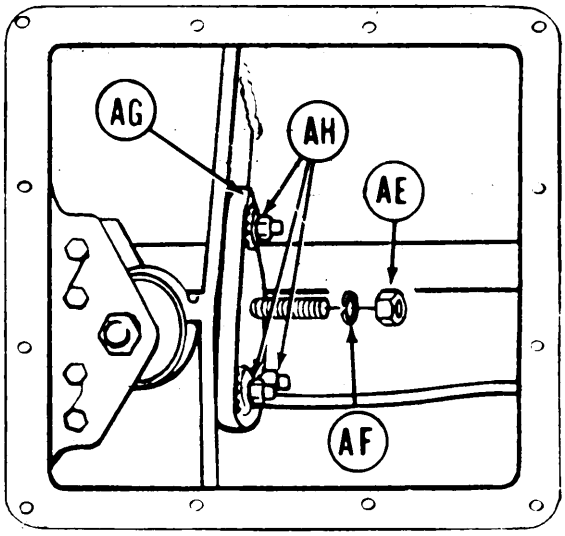

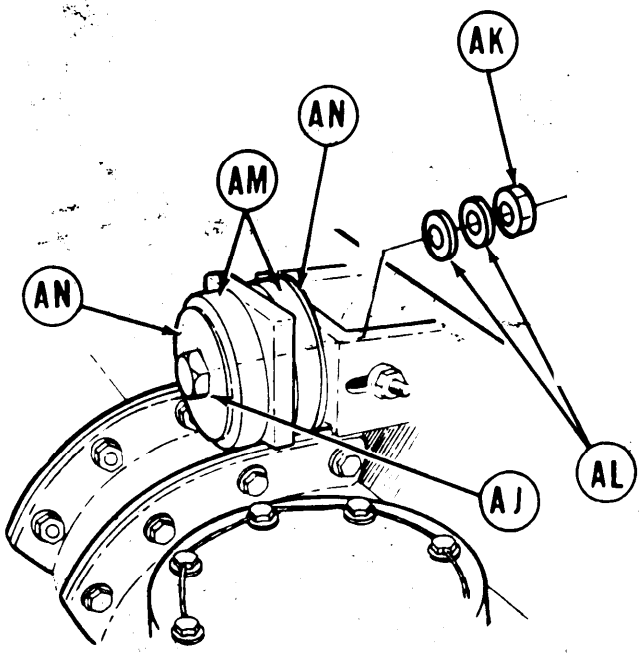

22. Using two 15/16 inch wrenches remove screw (AJ), nut (AK), two washers (AL), (rubber mounts (AM), and two washers (AN) from brackets.

Go on to Sheet 6

TA250906

FUEL TANK (LEFT) REPLACEMENT (Sheet 6 of 16)

23. Using 1/2 inch wrench, remove screws and washers (AP) securing lower front mount bracket (AQ) to hull floor.

24. Using two 15/16 inch wrenches, loosen screw (AR) and nut (AS).

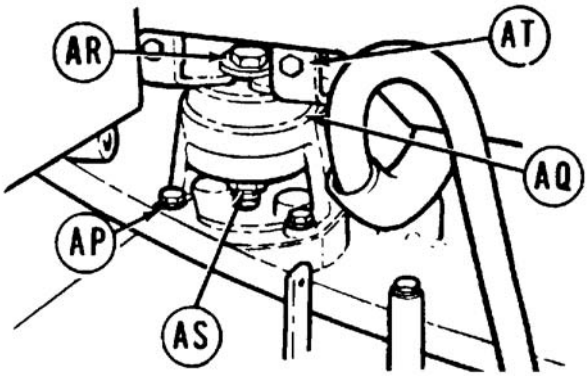

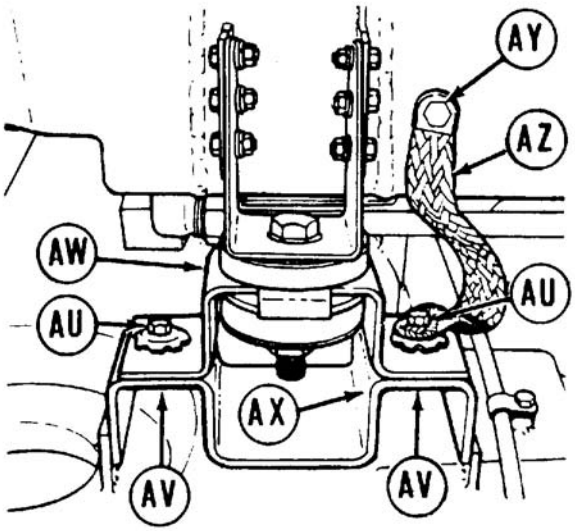

25. Rotate lower front mount bracket (AQ) 180 degrees and remove from fuel tank bracket (AT).

26. Using 1/2 inch wrench and 1/2 inch socket, remove two screws (AU) and nuts and washers (AV) securing lower rear mount bracket (AW) to hull bracket (AX).

27. Using 9/16 inch wrench, remove screw and two washers (AY) securing ground strap (AZ) to fuel tank. Remove strap.

CAUTION

- **Fuel tank is fabricated of aluminum and is therefore subject to damage from sharp objects. Use utmost care during handling. Do not force fuel tank with poles or bars as damage may result.**
- **During disassembly several fuel tank openings may be exposed. Cover these openings with masking tape to prevent entry of foreign matter.**

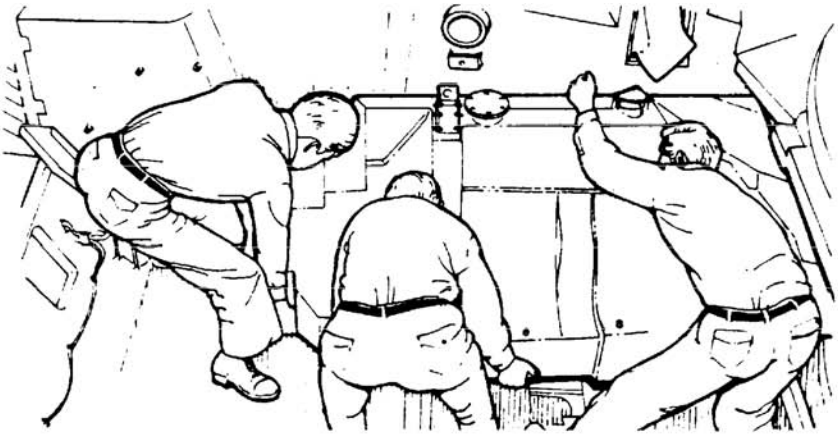

28. Using three persons, pivot fuel tank toward center of hull while slowly moving fuel tank toward rear, until rear end of fuel tank clears curve in hull.

Go on to Sheet 7

TA250907

FUEL TANK (LEFT) REPLACEMENT (Sheet 7 of 16)

29. Using fourth person to guide and lift that part of the fuel tank located under the floor, remove fuel tank from its position and carefully rest it on hull.

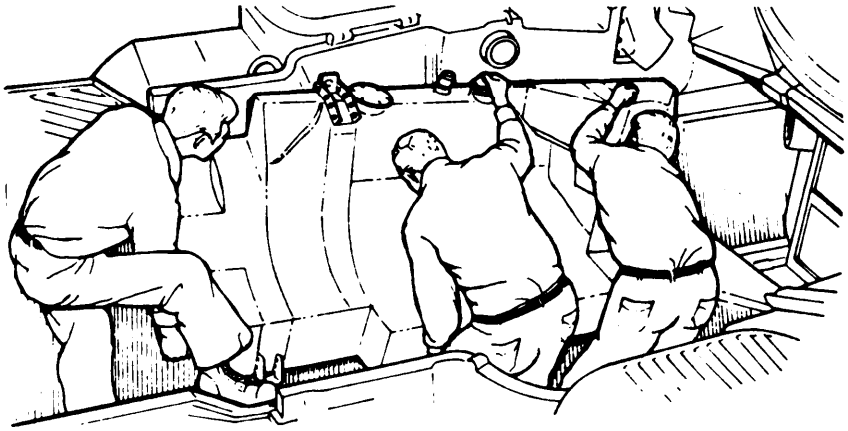

WARNING

When draining or filling fuel tank, post notice that smoking is not allowed in or near vehicle.

NOTE

A small amount of fuel may still be in the fuel tank. Drain into container by tilting fuel tank carefully.

30. Using four persons, lift fuel tank out of hull.

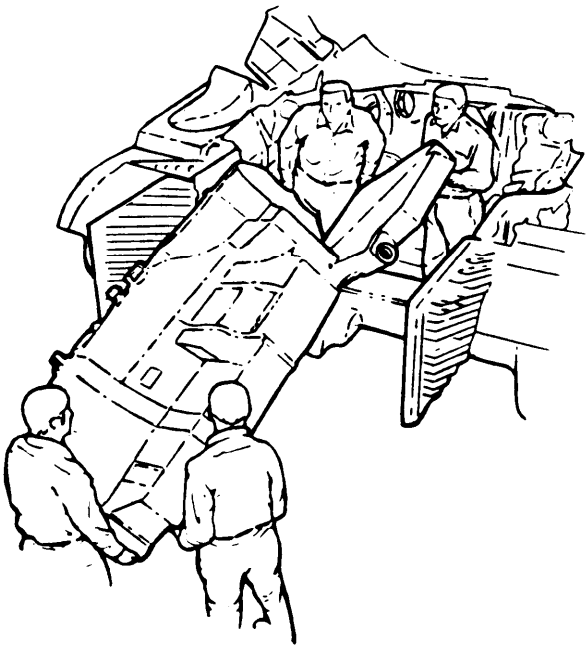

Go on to Sheet 8

TA250908

FUEL TANK (LEFT) REPLACEMENT (Sheet 8 of 16)

NOTE

If fuel tank is to be repaired, go to page 7-331.
If fuel tank is to be replaced, go to step 31.

WARNING

Dry cleaning solvent P-D-680 is toxic and flammable. To prevent personal injury, wear protective goggles and gloves and use only in a well-ventilated area. Avoid contact with skin, eyes, and clothes and don't breathe vapors. Do not use near open flame or excessive heat. The flash point for Type #1 Dry Cleaning Solvent is 100°F (38°C) and for Type #2 is 138°F (50°C). If you become dizzy while using cleaning solvent, get fresh air immediately and get medical aid. If contact with eyes is made, wash your eyes with water and get medical aid immediately.

31. If required, use putty knife and dry cleaning solvent (Item 55, Appendix D) to remove seals (BA) from hull. Clean area of all adhesive and mark area on hull where seals had been.

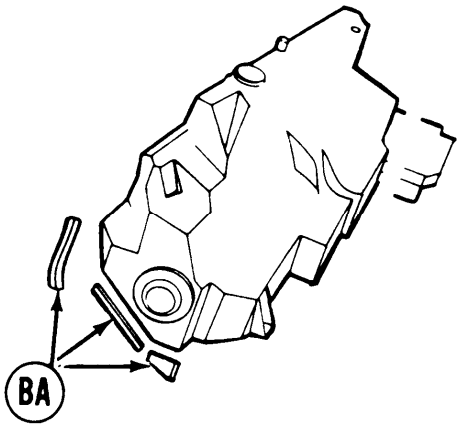

32. Remove fuel tank upper front mount (page 7-388).
33. Remove fuel tank upper rear mount (page 7-394).
34. Remove capacitor housing and fuel pump (page 10-321).
35. Remove emergency filler cover, gasket, and strainer (page 7-139).
36. Remove fuel tank pipe plug and bracket from top of tank (page 7-131).
37. Remove condensate plug and outlet (page 7-131).
38. Remove fuel vent elbow from tank (page 7-153).
39. Remove fuel level transmitter (page 7-141).
40. Remove fuel tank lower front mount (page 7-382).
41. Remove fuel tank lower rear mount (page 7-377).
42. Using 7/8 inch wrench, remove fuel vent elbow (AD).

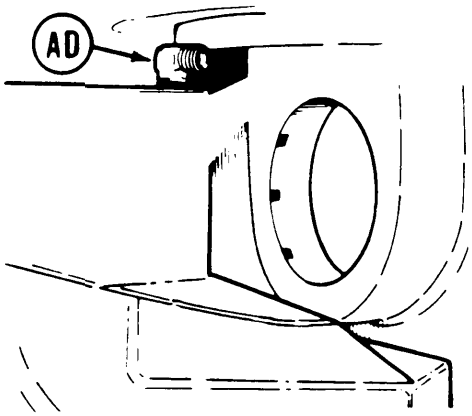

Go on to Sheet 9

TA250909

FUEL TANK (LEFT) REPLACEMENT (Sheet 9 of 16)

INSTALLATION:

NOTE

If fuel tank is to be repaired, go to page 7-331. If fuel tank is to be replaced, got to step 2.

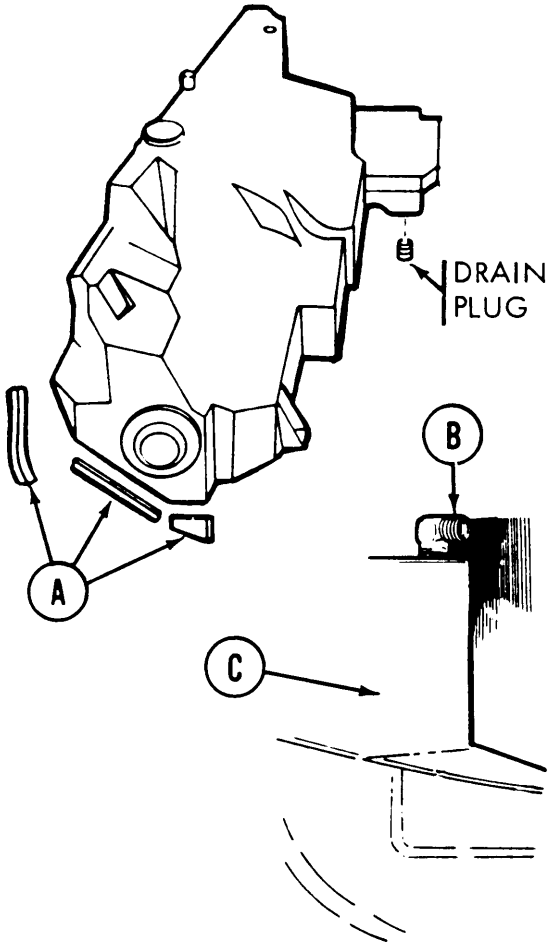

1. If required, use adhesive (Item 4, Appendix D to install new seals (A) in marked positions on hull.

2. Install upper front mount on fuel tank (page 7-341).

3. Install upper rear mount on fuel tank (page 7-396).

4. Apply sealing compound (Item 23, Appendix D to male threads of fuel vent elbow (B), and using adjustable wrench, install and position elbow (B) in tank (C) as shown.

5. Install condensate outlet and plug in fuel tank (page 7-178).

6. Install fuel level transmitter in fuel tank (page 7-143).

7. Install emergency filler strainer, gasket and cover (page 7-139).

8. Install fuel pump and capacitor housing in fuel tank (page 7-16).

9. Install plug and bracket on top of fuel tank and drain plug in the side of fuel tank (page 7-152).

10. Install lower front mount on fuel tank (page 7-383).

11. Install lower rear mount on fuel tank (page 7-379).

CAUTION

Do not use pry bars or wood poles to force fuel tank into place. Take care not to scrape, puncture, or otherwise damage tank.

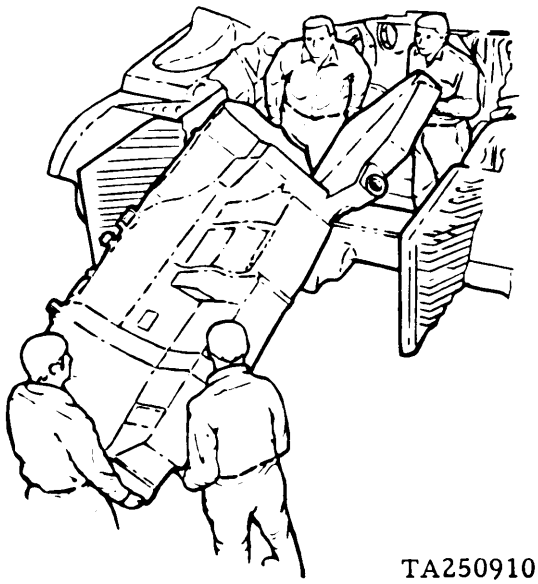

12. Using four persons, place fuel tank into the vehicle.

Go on to Sheet 10

FUEL TANK (LEFT) REPLACEMENT (Sheet 10 of 16)

13. Using three persons, move fuel tank forward and slide front section of tank under crew compartment floor. As rear of tank clears rear of hull, lower fuel tank while continuing forward motion until curve inside of hull is cleared.

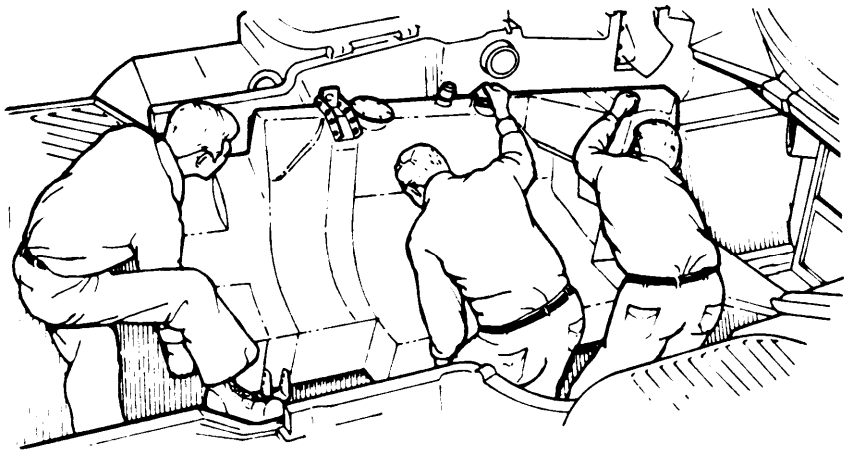

14. Swing fuel tank toward left side of hull, position upper front mount, and move fuel tank forward into position.

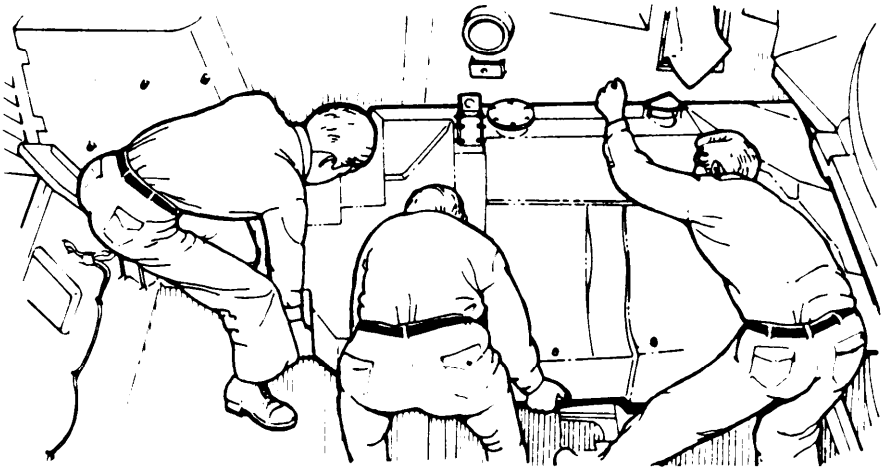

NOTE

Make sure that front-upper mount bolt is guided into position while moving fuel tank into place.

Go on to Sheet 11

TA250911

FUEL TANK (LEFT) REPLACEMENT (Sheet 11 of 16)

15. Using 15/16 inch wrench, install lockwasher (D) and nut (E) to front mount (F). Using 9/16 inch socket and torque wrench, torque three nuts (G) to 14-16 lb-ft (19 - 22· N m).
16. Using 15/16 inch wrench, adjust front mount (F) until 1/2 inch clearance is obtained between fuel tank (C) and bulkhead (H).

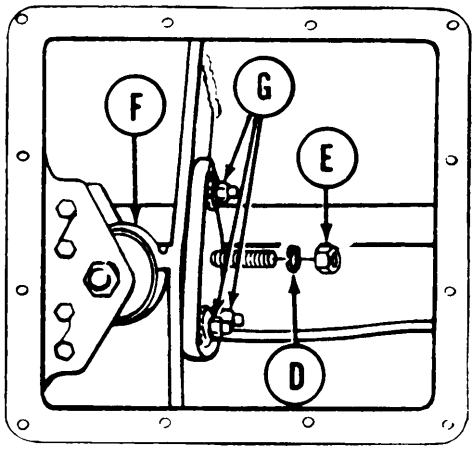

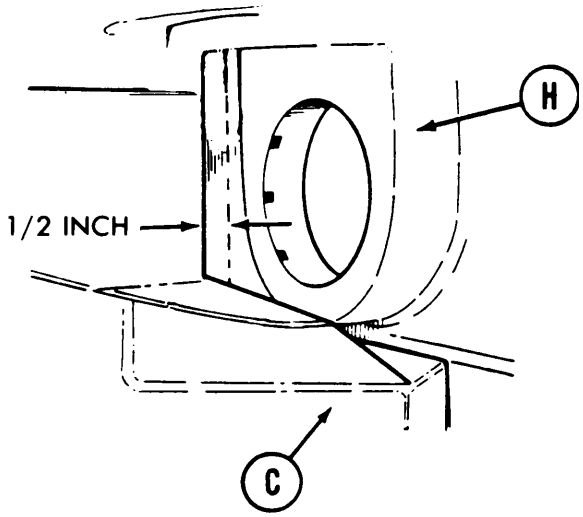

17. Position mount (J) in fuel tank bracket and rotate 180 degrees. Using 1/2 inch wrench, install lower front mount (J) to hull floor using two screws and washers (K).

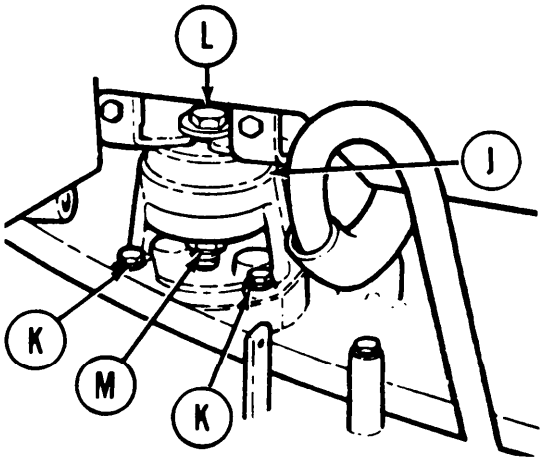

18. Using two 15/16 inch wrenches, tighten screw (L) and nut (M).

Go on to Sheet 12

TA250912

FUEL TANK (LEFT) REPLACEMENT (Sheet 12 of 16)

NOTE

Use spacer/washer as required for proper clearance between fuel tank and crew compartment floor.

19. Secure lower rear mount (N) and ground strap (P) to hull bracket (Q) using two screws, new washers, and nuts (R).

20. Using 1/2 inch wrench and 1/2 inch socket, tighten screws and nuts (R).

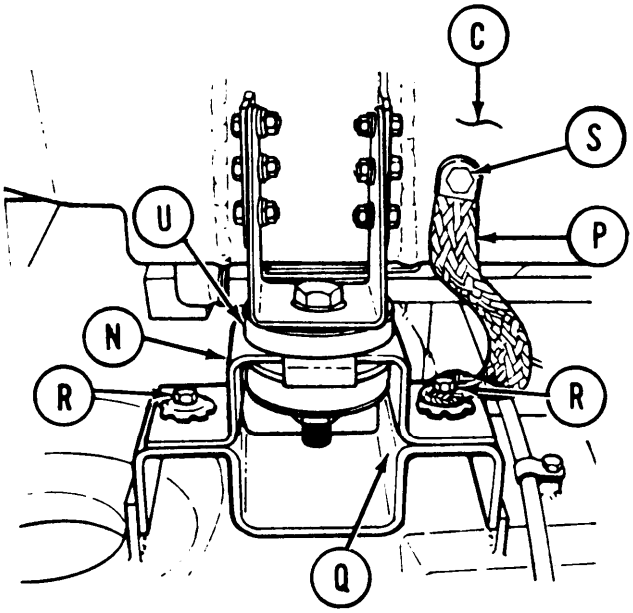

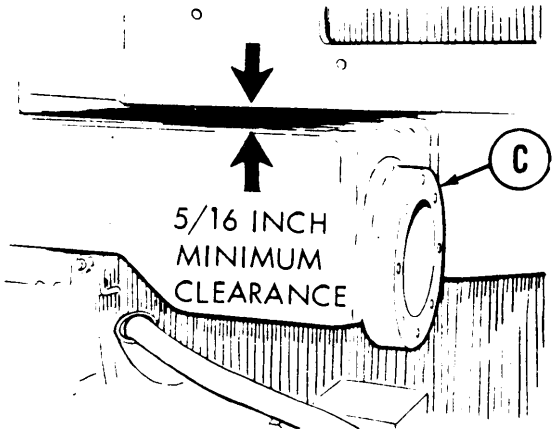

21. Using 9/16 inch wrench, install ground strap (P) to fuel tank (C) with new washer and screw (S).

22. Check for 5/16 inch clearance between fuel tank (C) and crew compartment floor. Add spacers (U) if required in lower rear mount (N) for correct clearance.

23. Using two 15/16 inch wrenches, install two rubber mounts and new washers (V) to fuel tank bracket (W) and hull bracket (X) with screw, new washers, and nut (Y).

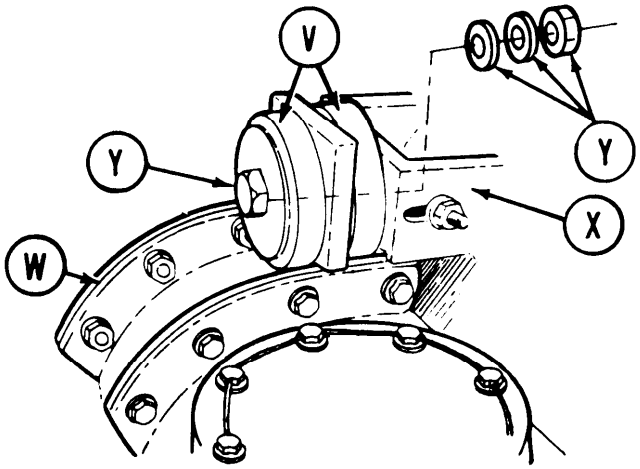

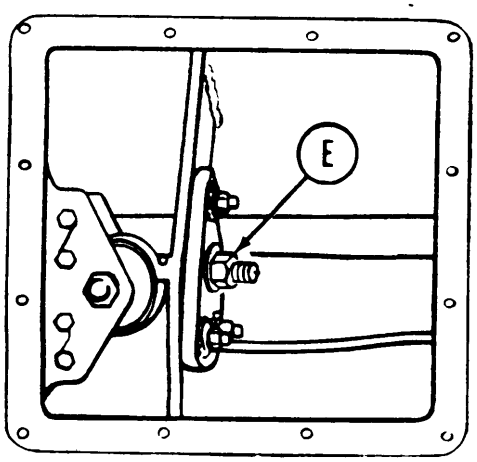

24. Using torque wrench and 15/ 16 inch crow foot, torque nut (E) to 130-145 lb-ft (176-196 N m).

25. After tightening all mounts, recheck clearance in steps 16 and 22 above. Readjust for proper clearance as required.

Go on to Sheet 13

TA250913

FUEL TANK (LEFT) REPLACEMENT (Sheet 13 of 16)

26. Install left bulkhead access cover (page 7-2).

27. Install crossover valve and hose between left and right fuel tank (page 7-148).

28. Install accelerator linkage assembly (page 7-323).

29. Install fuel shutoff cable (page 7-364).

30. Apply sealing compound to threads of elbow (Z) and, using adjustable wrench, install elbow (Z) in fuel tank (C).

31. Position tube assembly (AA) under tank and using 7/16 inch socket, install clamp, washer and screw (AB) onto fuel tank (C).

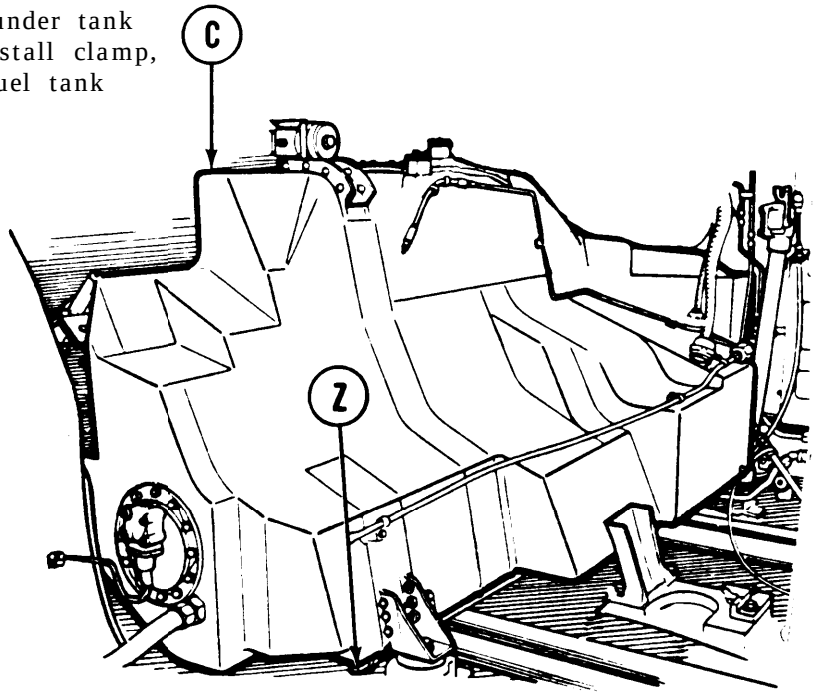

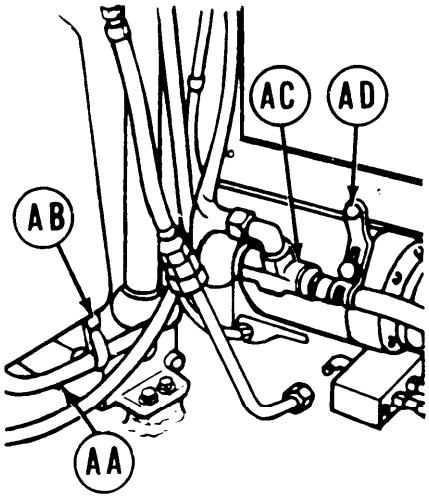

32. Install tube assembly (AA) onto elbow (Z) and using 1-1/8 inch wrench, tighten.

33. Using 9/16 inch wrench, install check valve (AC) and hose assembly with bracket onto bulkhead wall with washer and screw (AD).

Go on to Sheet 14

FUEL TANK (LEFT) REPLACEMENT (Sheet 14 of 16)

34. Using 1-1/8 inch wrench, connect tube assembly (AA) to check valve (AE).

35. Using 1-1/8 inch wrench connect hose assembly (AF) to elbow (AG) on right tank.

36. Install powerplant guide (AH) to hull. Using 15/16 inch wrench install screws and washers (AK).

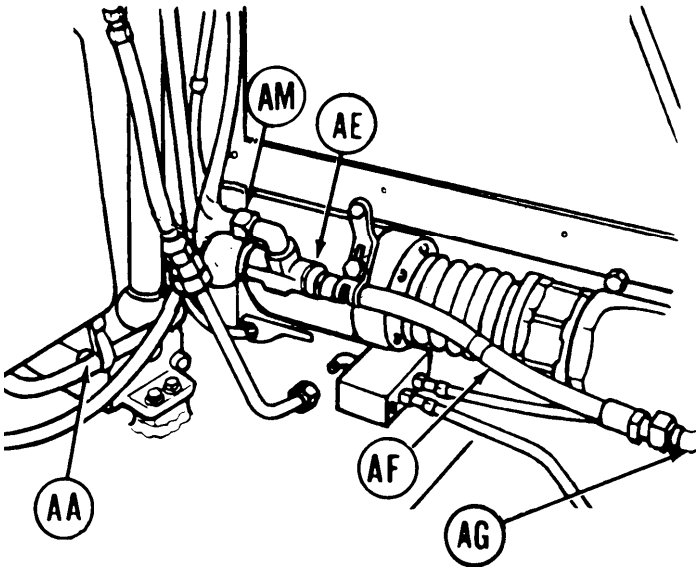

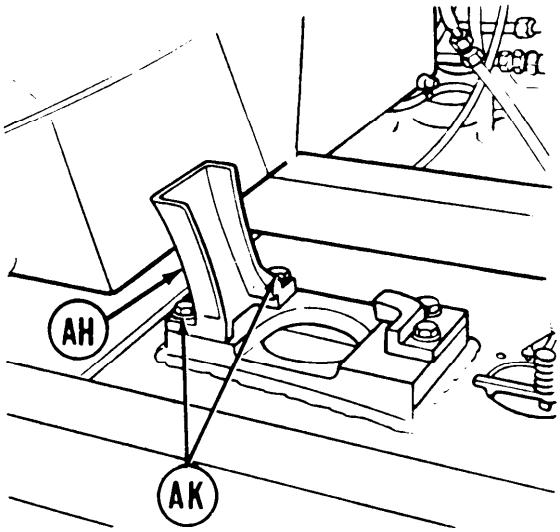

37. Install purge line (AJ) on tank (C) and, using 7/16 inch socket, secure line to fuel tank with clamps and screws (AL).

38. Using 1-1/8 inch wrench, connect coupling (AM).

39. Using two 9/16 inch wrenches, connect the purge and main fuel line couplings (AN).

40. Using 1/2 inch socket, and 1/2 inch wrench, secure purge lines to bracket with clamps, screws, washers, and nuts (AP).

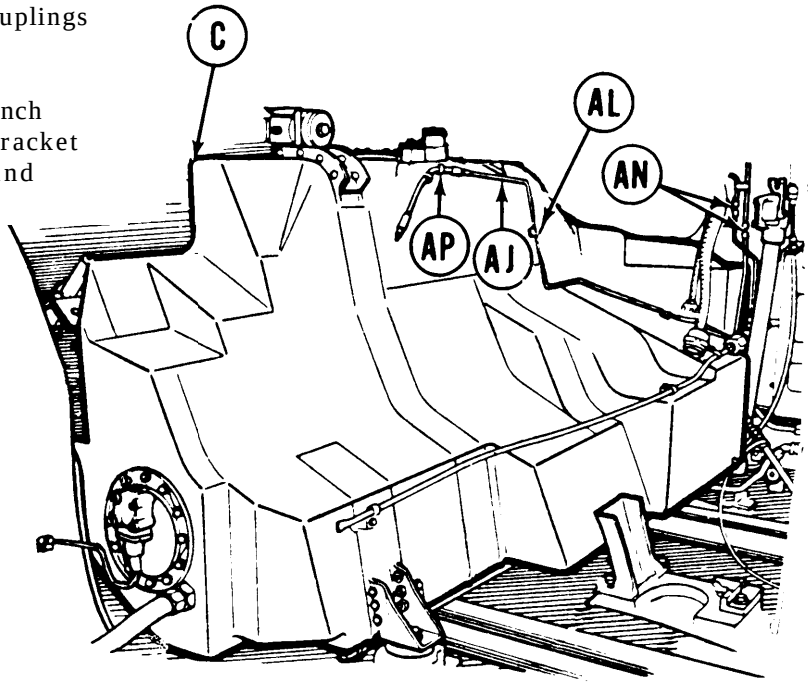

Go on to Sheet 15

TA250915

FUEL TANK (LEFT) REPLACEMENT (Sheet 15 of 16)

41. Position fire extinguishers tube (AQ) onto fuel tank.

42. Using 1-1/8 inch wrench, connect tube to adapter (AR).

43. Using 1/2 inch wrench, install screw and clamp (AS).

44. Install fuel return hose assembly (AT) into fuel tank (C).

45. Install cable connector (AU) onto capacitor housing.

46. Connect fuel level transmitter electrical lead (AV) to transmitter.

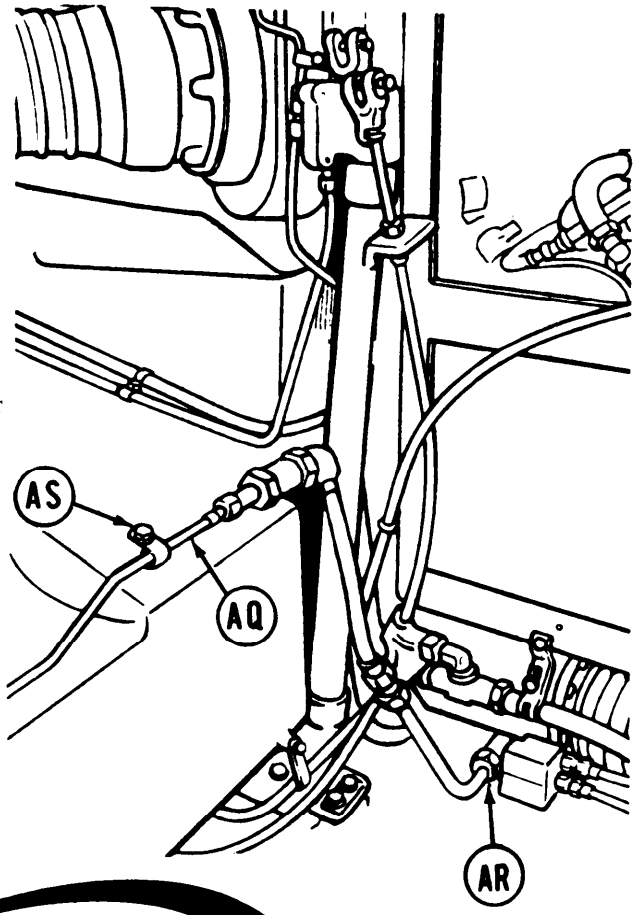

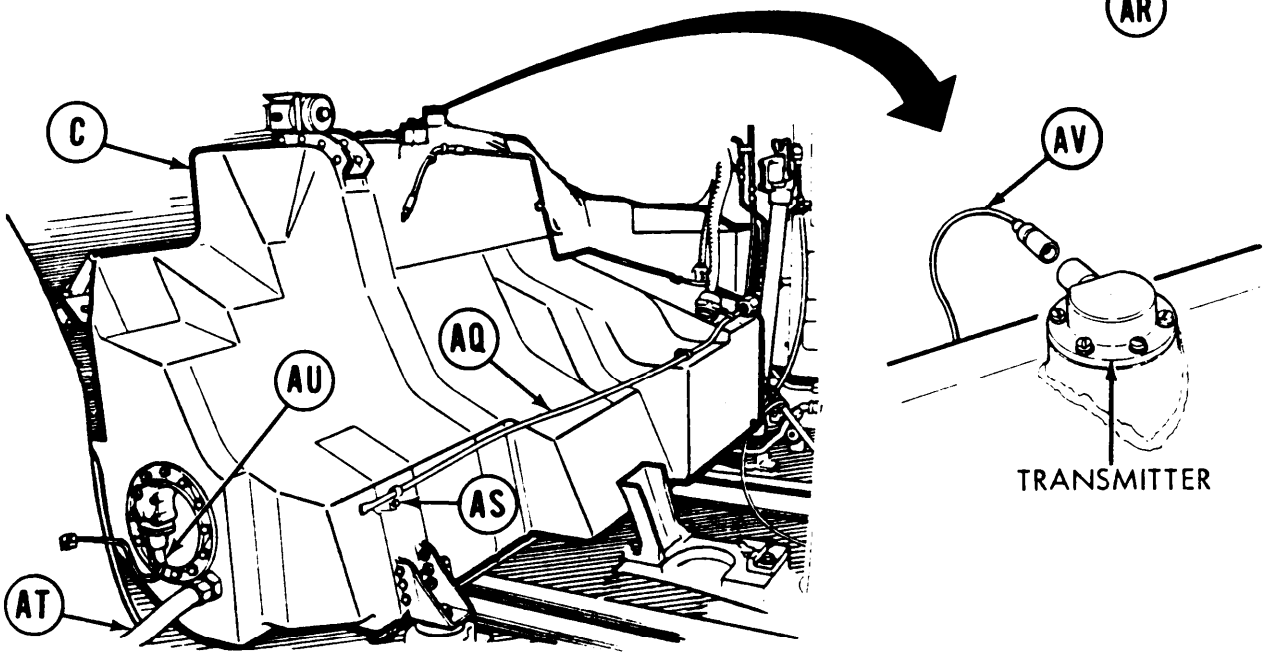

Go on to Sheet 16

TA250916

FUEL TANK (LEFT) REPLACEMENT (Sheet 16 of 16)

47. Using 1-1/8 inch wrench, install fuel return hose assembly (AW) onto elbow (B).

48. Using 7/8 inch wrench, install elbow (AY) to fuel tank.

49. Using 1-1/8 inch wrench, connect fuel vent hose (AX) to elbow (AY).

50. Install number four (left and right) torsion bars (page 14-22).

51. Fill fuel tank (TM 5-5420-202-10).

52. Install air intake assembly (page 7-68).

53. Install powerplant (page 5-14).

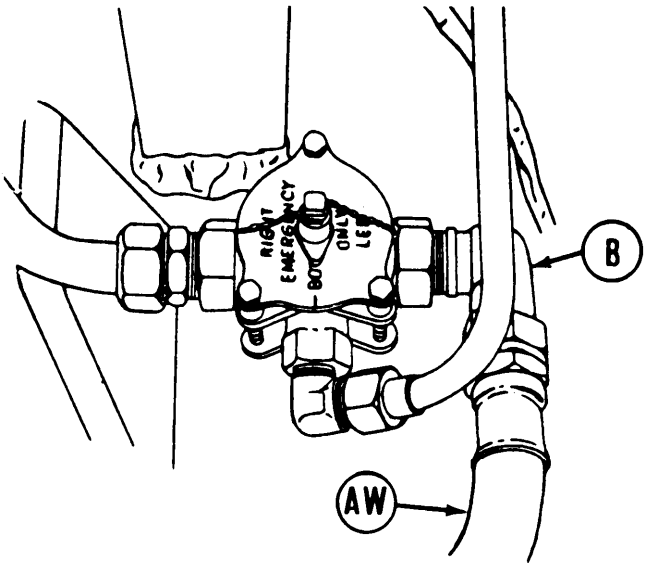

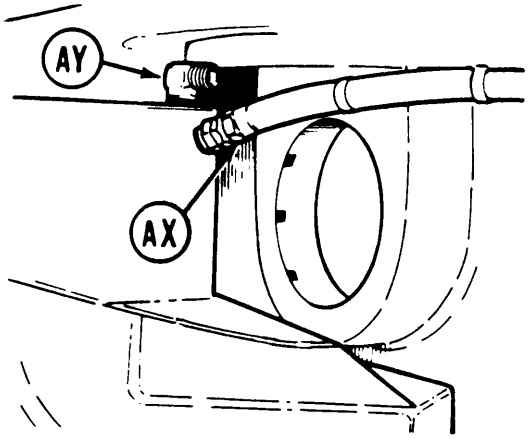

End of Task

TA250917

FUEL SHUTOFF CABLE ASSEMBLY REPLACEMENT (Sheet 1 of 13)

PPOCEDURE INDEX

PROCEDURE	PAGE
Removal	7-365
Installation	7-371

TOOLS: 5/8 in. open end wrench
7/16 in. socket with 1/2 in. drive
7/16 in. open end wrench (2 required)
1/2 in. open end wrench (2 required)
9/16 in. open end wrench
3/4 in. open end wrench
15/16 in. open end wrench (2 required)
Ratchet with 1/2 in. drive
Putty knife
Slip joint pliers
Screwdriver flat tip

SUPPLIES: Bushing
Packing
Wire (8 to 10 ft) (Item 62, Appendix D)
Adhesive (Item 4, Appendix D)
Grommet
Lockwashers
Cotter Pin

PERSONNEL: Two

REFERENCE: TM 5-5420-202-10

PRELIMINARY PROCEDURES: Remove powerplant (page 5-2)
Remove fuel shutoff handle from bracket (page 7-171)
Remove subfloor access cover, directly in front of operator's seat (page 17-8).

Go on to Sheet 2

FUEL SHUTOFF CABLE ASSEMBLY REPLACEMENT (Sheet 2 of 13)

REMOVAL:

1. Using 9/16 inch wrench on locknut (A) and 5/8 inch wrench on clevis (B), back off locknut (A).
2. Remove clevis (B) and locknut (A) from cable assembly (C).

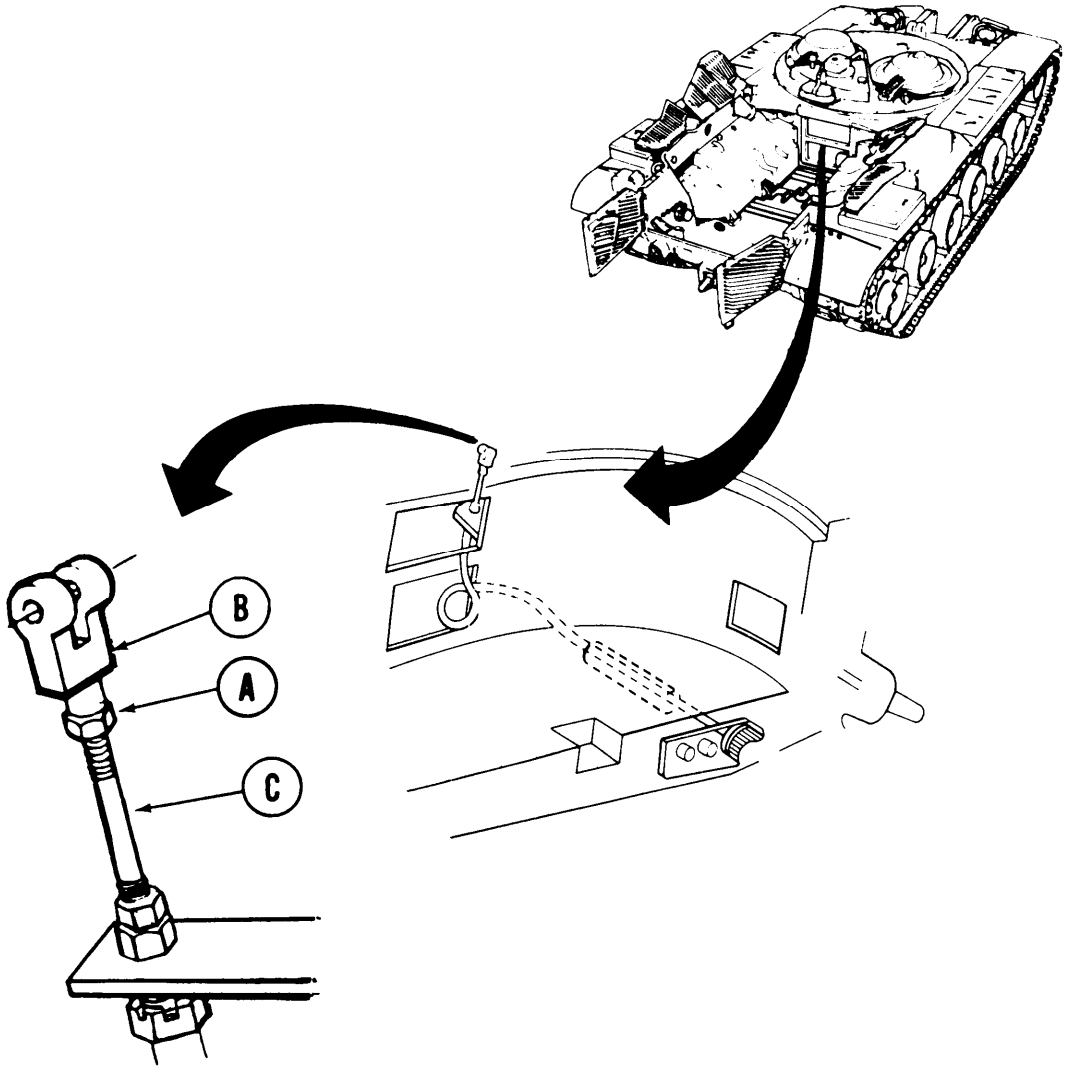

Go on to Sheet 3

TA250920

FUEL SHUTOFF CABLE ASSEMBLY REPLACEMENT (Sheet 3 of 13)

3. Using 3/4 inch wrench, remove nut (D), packing (E), and washer (F) from cable assembly (C).

4. Using two 15/16 inch wrenches, hold nut (G) and remove nut (H) and lockwasher (J) from cable assembly (C).

5. Pull cable assembly (C) from bracket (K).

6. Using 15/16 inch wrench, remove lockwasher (L) and nut (G) from cable assembly (C).

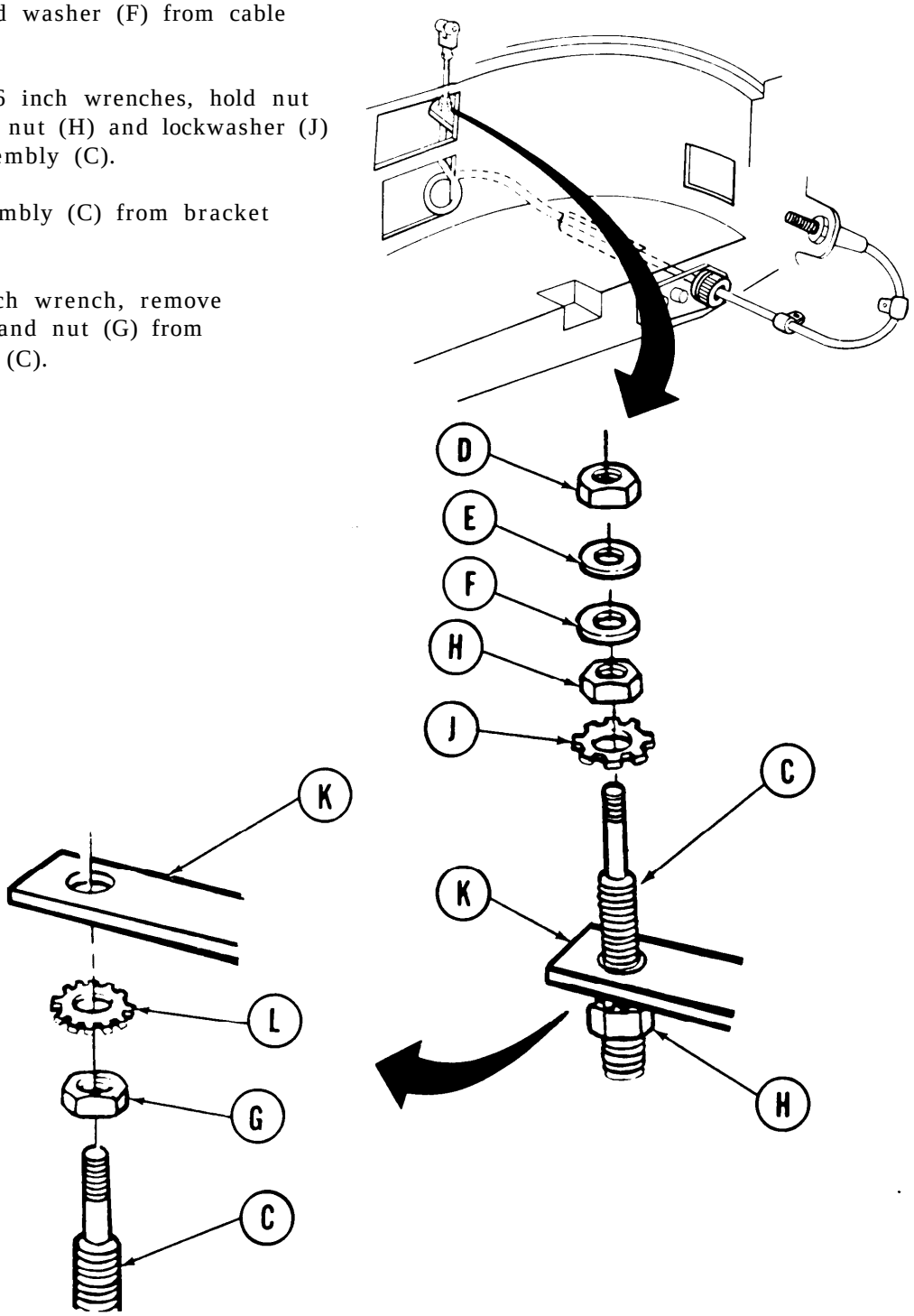

Go on to Sheet 4

TA250921

EMBLY REPLACEMENT (Sheet 4 of 13)

NOTE

Clamp (M) is located through subfloor access plate directly in front of operator"s seat.

7. Using 7/16 inch socket, remove screw (N) and lockwashers (P) holding clamp (M). Remove clamp (M).

8. Using screwdriver, loosen clamp (Q) and slide it forward on cable assembly (C).

9. Using hands, pull cable assembly (C) forward to dislodge grommet (R) from bulkhead connector (S).

10. Remove grommet (R) from cable assembly (C).

11. Using putty knife, remove bushing (T) from cable assembly (C). Discard bushing (T).

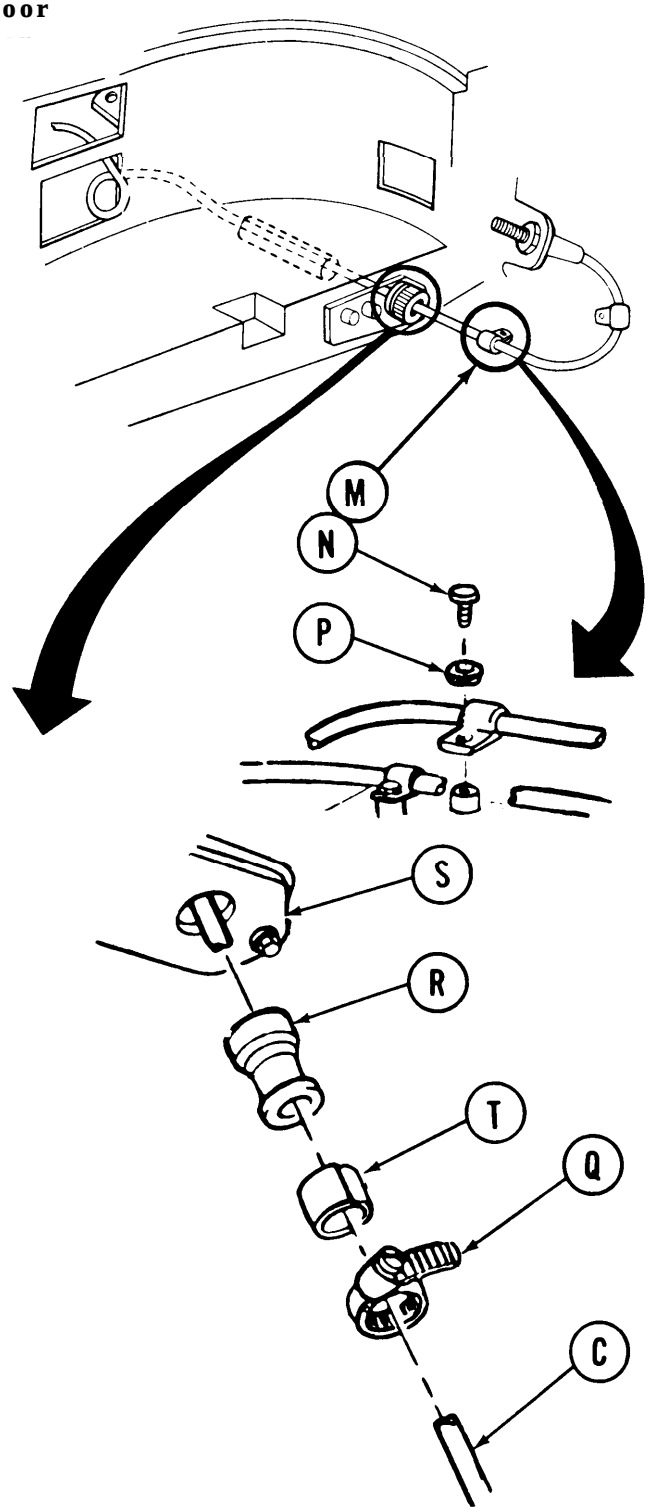

Go on to Sheet 5

TA250922

FUEL SHUTOFF CABLE ASSEMBLY REPLACEMENT (Sheet 5 of 13)

12. Using pliers, remove cotter pin (U), flat washer (V), and pin (W) holding spring (X) to hinge (Y).

13. Remove spring (X).

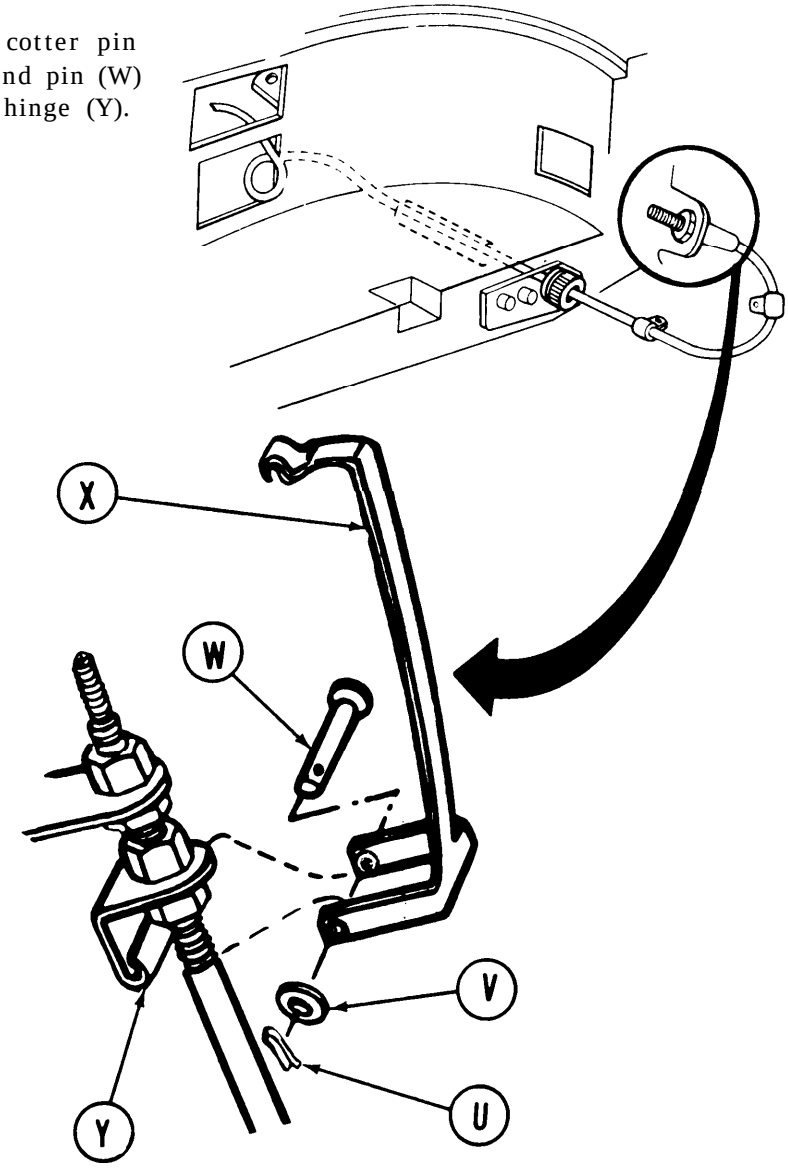

Go on to Sheet 6

TA250923

FUEL SHUTOFF CABLE ASSEMBLY REPLACEMENT (Sheet 6 of 13)

14. Using two 15/16 inch wrenches, remove top nut (Z) and lockwasher (AA) securing cable assembly (C) to bracket (AB).

15. Pulling down, remove cable assembly (C) from bracket (AB).

16. Using two 15/16 inch wrenches, remove three nuts (AC), lockwashers (AD), and hinge (Y) from cable (C).

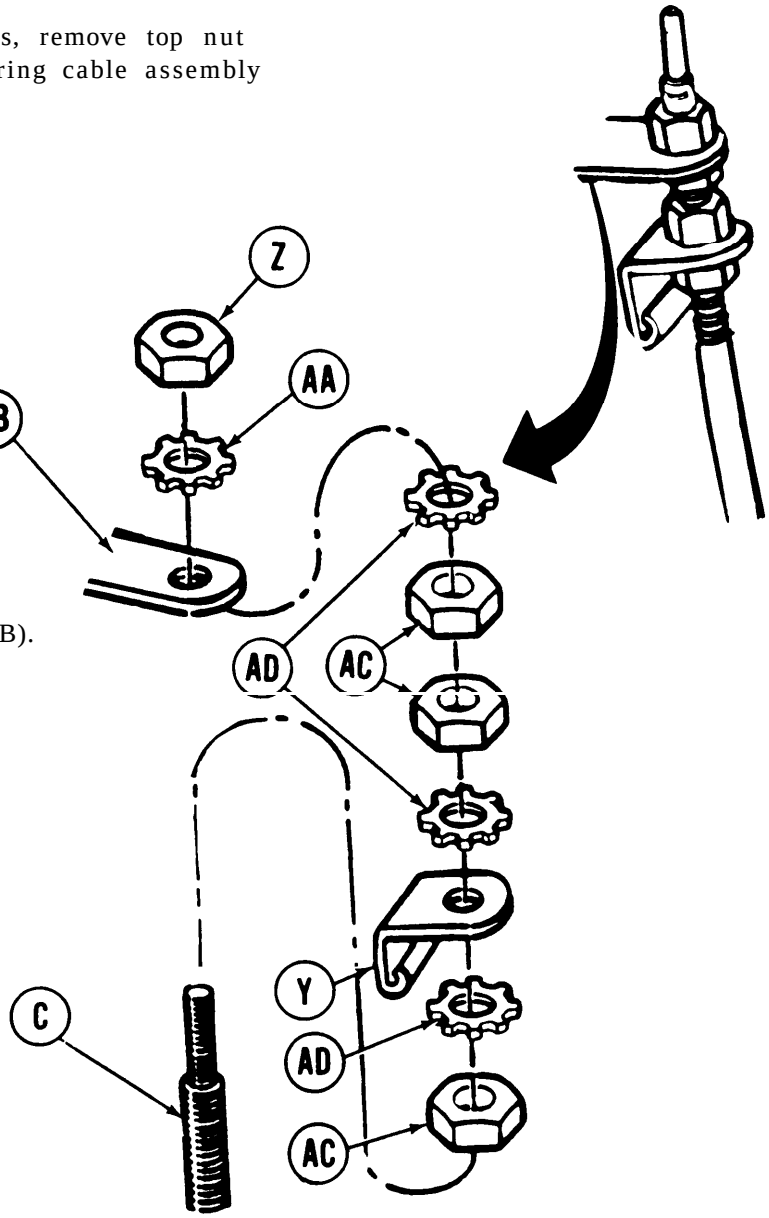

Go on to Sheet 7

TA250924

FUEL SHUTOFF CABLE ASSEMBLY REPLACEMENT (Sheet 7 of 13)

17. Wrap and securely tie 8 inches of a 10 foot length of wire (AG) around rear end of cable assembly (L).

NOTE

Wire (AG) will be used during installation to thread cable assembly through guide tube (AH) and bulkhead connector (U).

18. Using two persons, remove cable assembly (L) by slowly pulling cable assembly (L) into engine compartment allowing wire (AG) to thread through guide tube (AH) and bulkhead connector (U).

19. Untie wire (AG) from rear of cable assembly (L) and remove cable assembly (L) from operators compartment. Leave wire (AG) in hull for cable assembly installation.

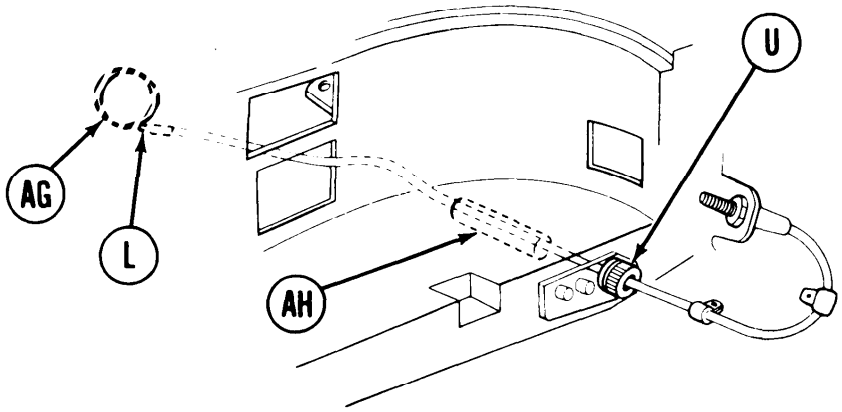

Go on to Sheet 8

TA250925

FUEL SHUTOFF CABLE ASSEMBLY REPLACEMENT (Sheet 8 of 13)

NOTE

Wire (A) is installed on cable assembly (B) to aid in threading cable back into place from operator's compartment to engine compartment.

Installation:

1. Tie operator's compartment end of wire to rear end of cable assembly (B).

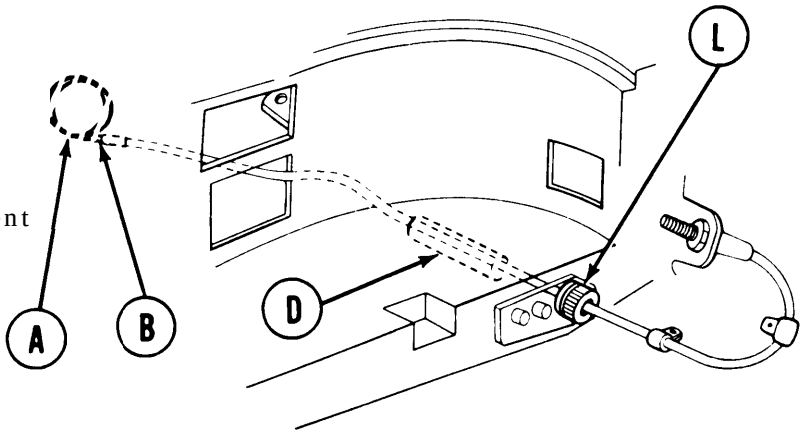

2. Using two technicians, install cable assembly (B) by pulling wire (A) slow through bulkhead connector (L) and guide tube (D).

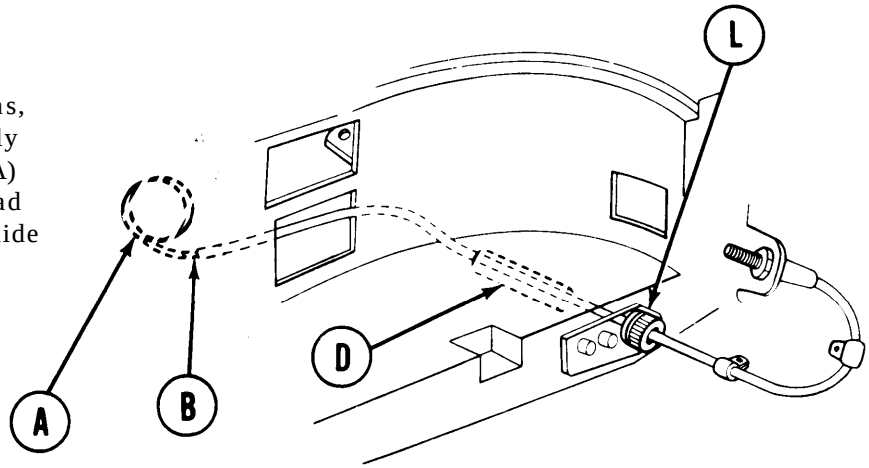

3. Remove wire (A) after cable assembly (B) has been threaded into place.

Go on to Sheet 9

TA250926

FUEL SHUTOFF CABLE ASSEMBLY REPLACEMENT (Sheet 9 of 13)

4. Install new grommet (E) onto cable assembly (B).

5. Apply adhesive to bushing (F) and install inside grommet (E) onto cable assembly (B). Insert grommet (E) with bushing (F) into bulkhead connector (C).

6. Using screwdriver, install clamp (G) on the outside of grommet (E). Tighten clamp (G).

7. Install and position clamp (H) onto cable assembly (B).

8. Using 7/16 inch socket, install screw (J) and new lockwasher (K) securing clamp (H) into position.

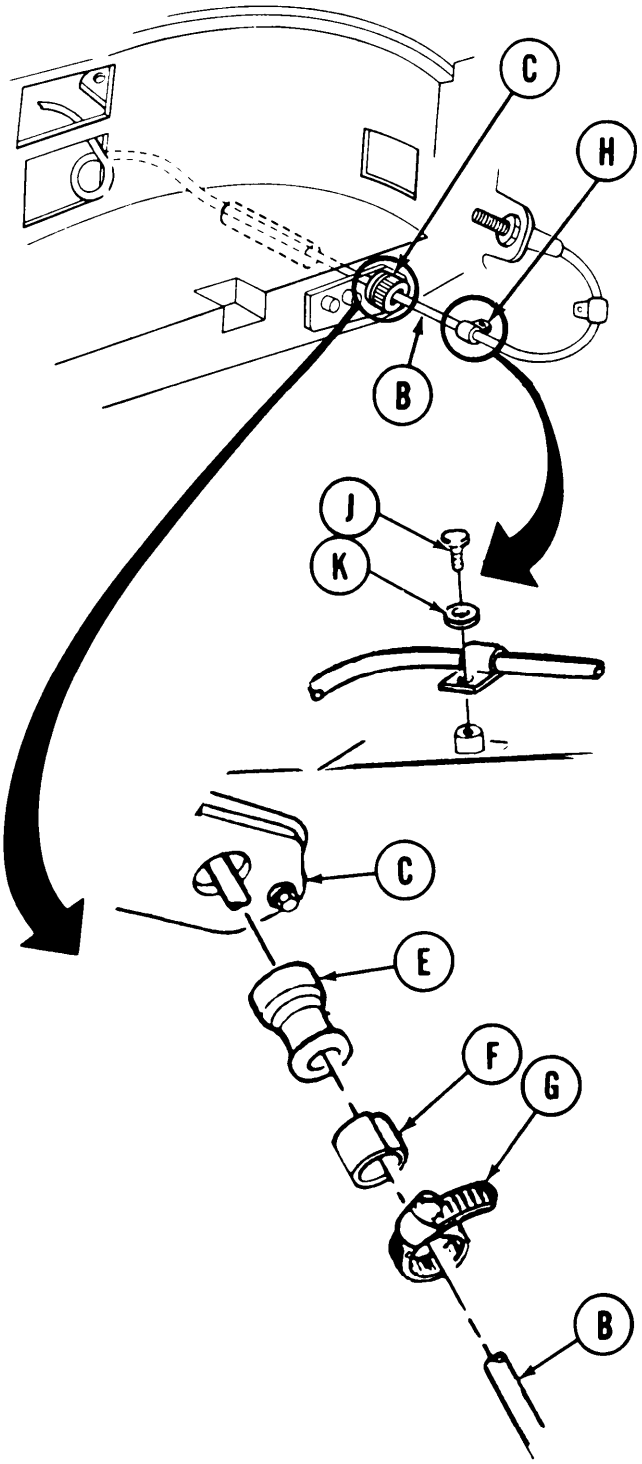

Go on to Sheet 10

TA250927

FUEL SHUTOFF CABLE ASSEMBLY REPLACEMENT (Sheet 10 of 13)

9. Using two 15/16 inch wrenches, install three nuts (L), three new lockwashers (M), and hinge (N) on cable assembly (B).

10. Thread cable assembly (B) through hole at end of bracket (P).

NOTE

Do not tighten nut (Q) at this time.

11. Using fingers install nut (Q) and new lockwasher (R) securing cable assembly (B) to bracket (P).

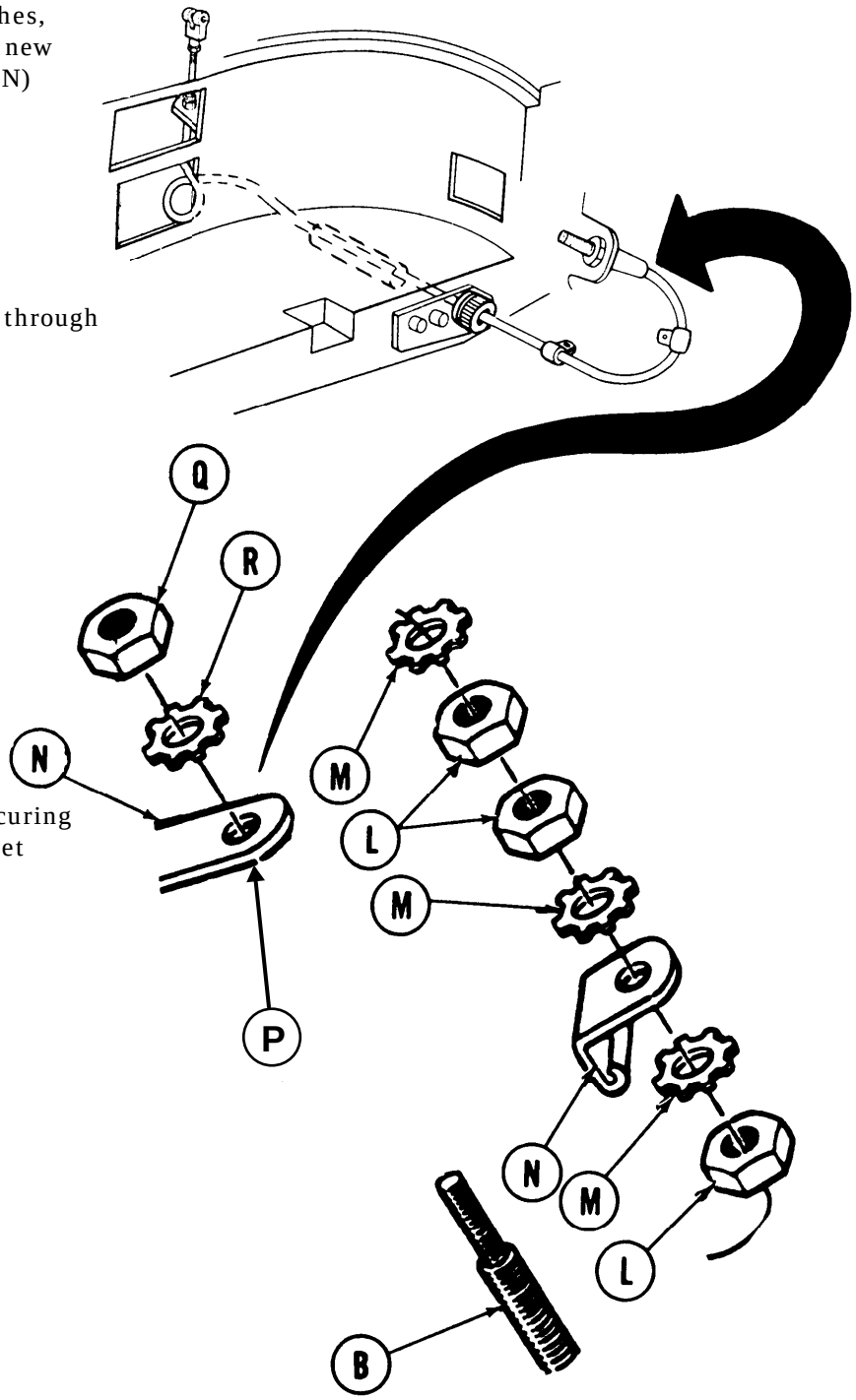

Go on to Sheet 11

TA250928

FUEL SHUTOFF CABLE ASSEMBLY REPLACEMENT (Sheet 11 of 13)

12. Aline spring (S) to hinge (N) and install pin (T) through spring (S) and hinge (N). Install flat washer (U).

13. Using pliers, install new cotter pin (V) into pin (T).

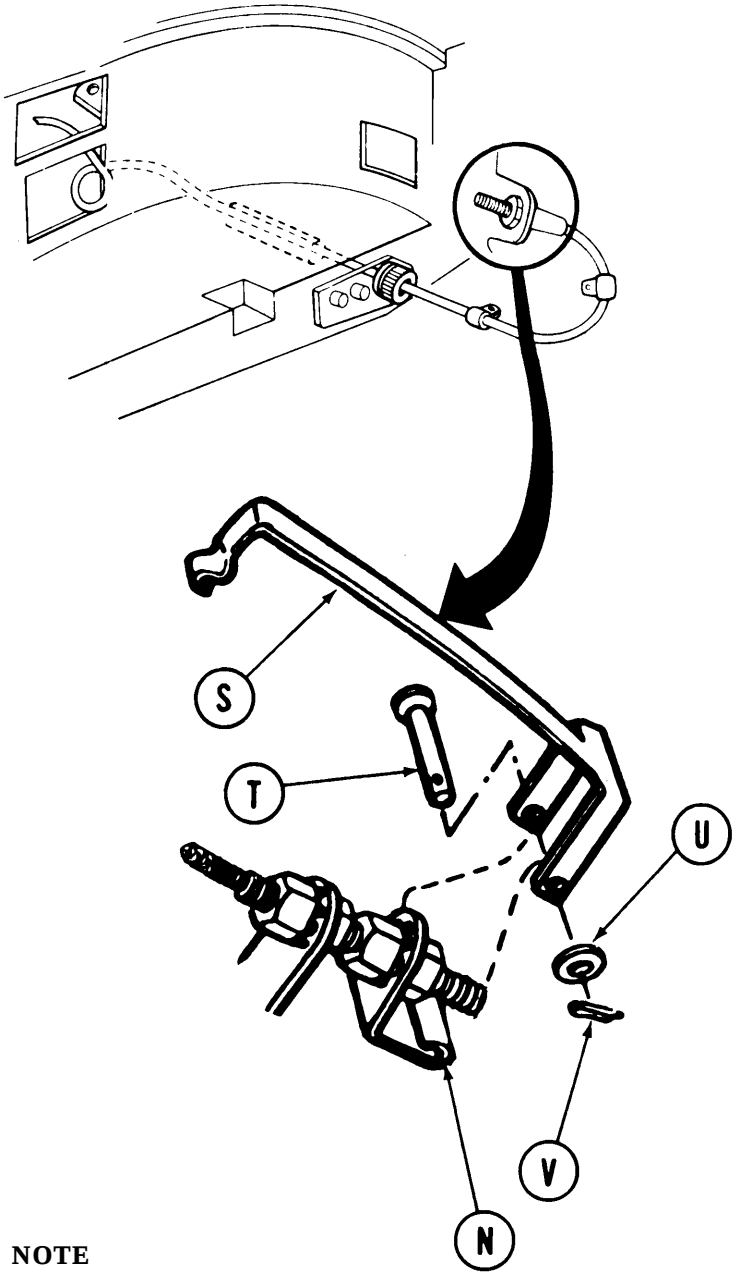

NOTE

For adjustment of spring (S), refer to fuel shutoff handle replacement (page 7-171).

Go on to Sheet 12

FUEL SHUTOFF CABLE ASSEMBLY REPLACEMENT (Sheet 12 of 13)

14. Using 15/16 inch wrench, install nut (W), and new lockwasher (X) onto cable assembly (B).

15. Thread cable assembly (B) through hole in bracket (Y).

16. Using two 15/16 inch wrenches, install new lockwasher (Z) and nut (AA) onto cable assembly (B).

17. Using 3/4 inch wrench, install washer (AB), packing (AC), and nut (AD).

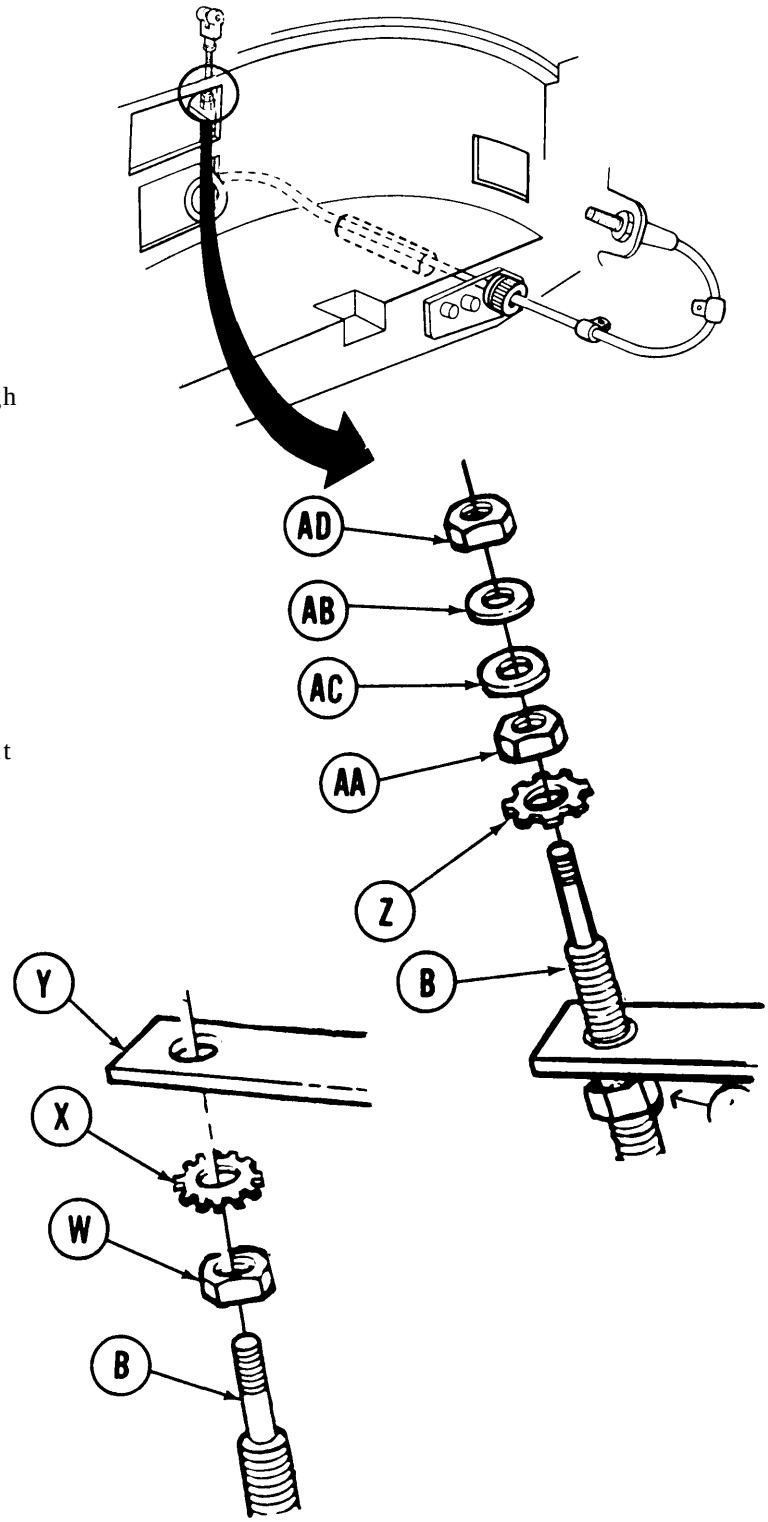

Go on to Sheet 13

TA250930

FUEL SHUTOFF CABLE ASSEMBLY REPLACEMENT (Sheet 13 of 13)

18. Using 9/16 inch wrench and 5/8 inch wrench, install nut (AE) and clevis (AF) onto fuel shutoff cable (AG).

19. Install powerplant (page 5-14).

20. Adjust fuel shutoff cable (page 7-300).-

21. Install fuel shutoff handle (page 7-171).-

22. Install subfloor access cover (page 17-8).

23. Check operation of fuel shutoff system (TM 5-5420-202-10).

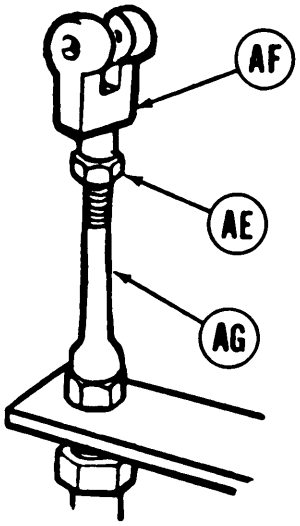

End of Task

TA250931

FUEL TANKS (LEFT AND RIGHT) LOWER REAR MOUNT REPLACEMENT (Sheet 1 of 4)

PROCEDURE INDEX

PROCEDURE	PAGE
Removal	7-378
Cleaning and Inspection	7-379
Installation	7-379

TOOLS: 9/16 in. socket with 1/2 in. drive
1/2 in. socket with 1/2 in. drive
Ratchet with 1/2 in. drive
1/2 in. combination box and open end wrench (2 required)
15/16 in. socket with 1/2 in. drive
15/16 in. combination box and open end wrench

SUPPLIES: Liquid detergent (Item 33, Appendix D)
Dry cleaning solvent (Item 55, Appendix D)
Rags (Item 65, Appendix D)
Lockwashers
Gloves (Item 69, Appendix d)
Goggles (Item 70, Appendix d)

REFERENCE: TM 5-5420-202-10

PRELIMINARY PROCEDURE: Remove powerplant (page 5-2)

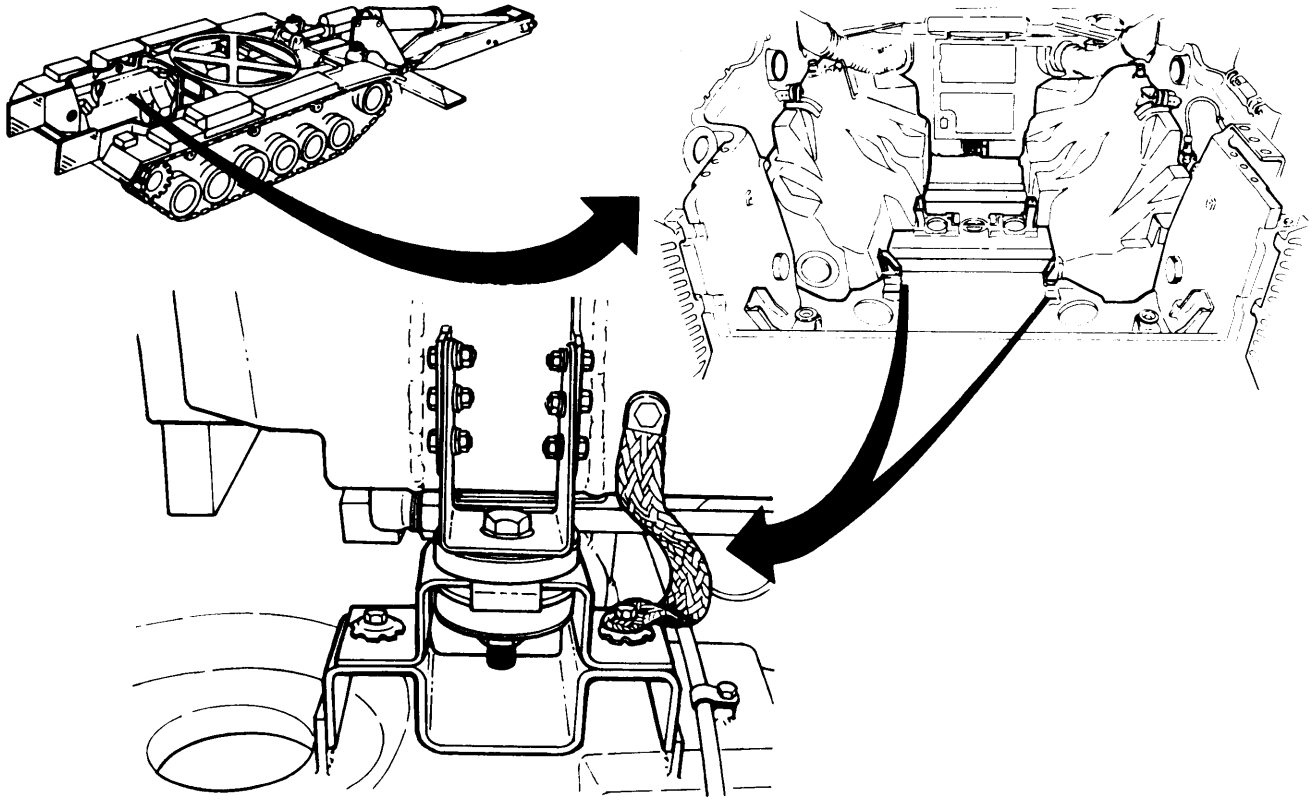

Go on to Sheet 2

TA250932

FUEL TANKS (LEFT AND RIGHT) LOWER REAR MOUNT REPLACEMENT (Sheet 2 of 4)

REMOVAL:

1. Using 1/2 inch socket, remove screw and washer (A) holding ground strap (B) to fuel tank (C).

2. Using 9/16 inch socket, remove two screws, washers and nuts (D) holding bracket (E) to hull bracket (F).

3. Remove ground strap (B).

4. Using two 1/2 inch wrenches, remove six screws, washers, and nuts (G) holding bracket (H) to fuel tank (C).

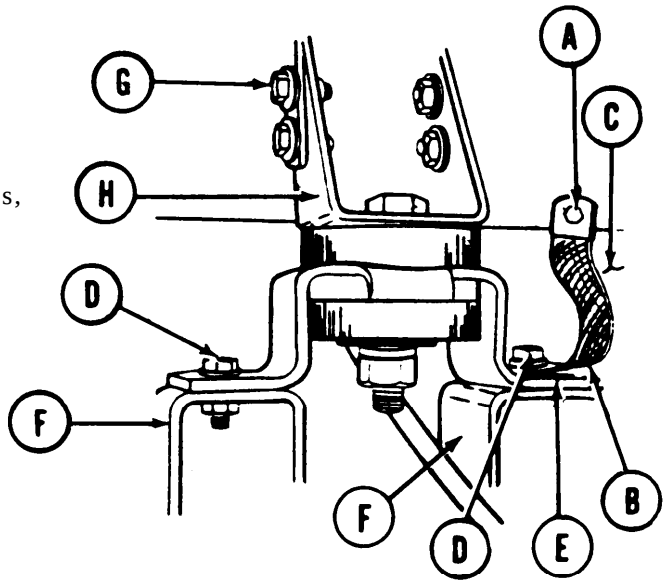

NOTE

There may be extra washers (N) added between rubber mount (Q) and upper bracket (H) to raise fuel tank.

5. Using 15/16 inch socket on screw (J) and 15/16 inch wrench on nut (K), remove screw (J), washer (L), nut (K), lockwasher (M), washer (N), and rubber mount (P).

6. Remove rubber mount (Q) and washer (N) between holding brackets (E and H).

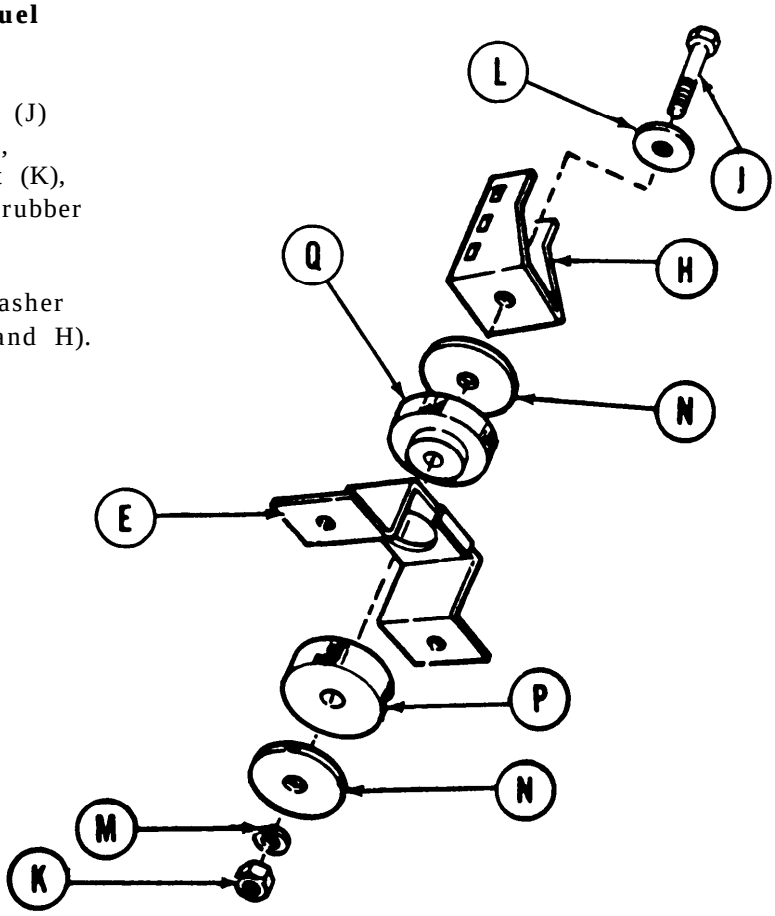

Go on to Sheet 3

TA250933

FUEL TANKS (LEFT AND RIGHT) LOWER REAR MOUNT REPLACEMENT (Sheet 3 of 4)

CLEANING AND INSPECTION:

1. Clean rubber mounts with detergent and water. Rinse clean with water.

WARNING

Dry cleaning solvent P-D-680 is toxic and flammable. To prevent personal injury, wear protective goggles and gloves and use only in a well-ventilated area. Avoid contact with skin, eyes, and clothes and don't breathe vapors. Do not use near open flame or excessive heat. The flash point for Type #1 Dry Cleaning Solvent is 100°F (38°C) and for Type #2 is 138°F (50°C). If you become dizzy while using cleaning solvent, get fresh air immediately and get medical aid. If contact with eyes is made, wash your eyes with water and get medical aid immediately.

2. Clean all metal parts with dry cleaning solvent. Wipe dry with rags.
3. Visually inspect rubber mounts for cuts, deterioration, or wear.
4. Visually inspect metal parts for wear.
5. Replace unserviceable parts.

INSTALLATION:

1. Install rubber mount (A) and washer (B) between holding brackets (C and D).
2. Insert screw (F) through washer (E) and holding brackets (C and D), then install rubber mount (G), washer (H), new lock-washer (J), and nut (K).
3. Using 15/16 inch socket on screw (F) and 15/16 inch wrench on nut (K), tighten screw (F) and nut (K).

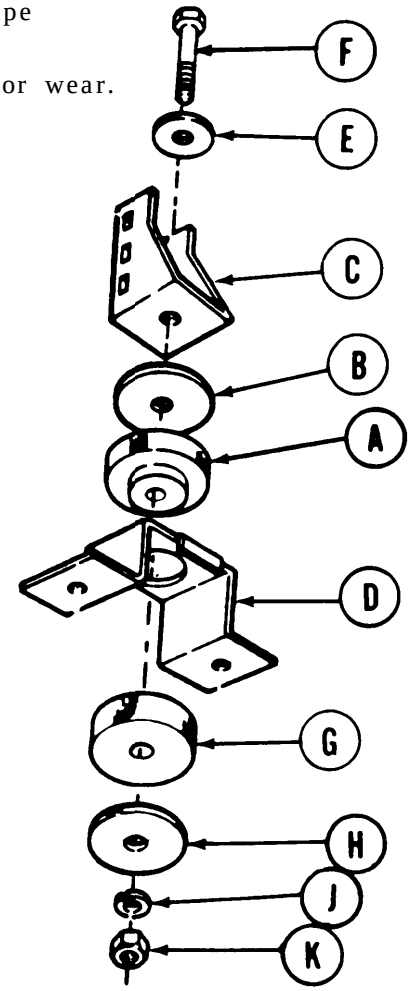

Go on to Sheet 4

TA250934

FUEL TANKS (LEFT AND RIGHT) LOWER REAR MOUNT REPLACEMENT (Sheet 4 of 4)

4. Install bracket (C) to fuel tank (L) using six screws, washers and nuts (M).

5. Using two 1/2 inch wrenches, tighten six screws and nuts (M).

6. Install ground strap (N) and two screws, washers and nuts (P) to secure bracket (Q) to hull bracket (R).

7. Using 9/16 inch socket, tighten screws and nuts (P).

8. Install ground strap (N) to fuel tank (L) using one screw and washer (S).

9. Using 1/2 inch socket, tighten screw and washer (S).

10. Install powerplant (page 5-4).

End of Task

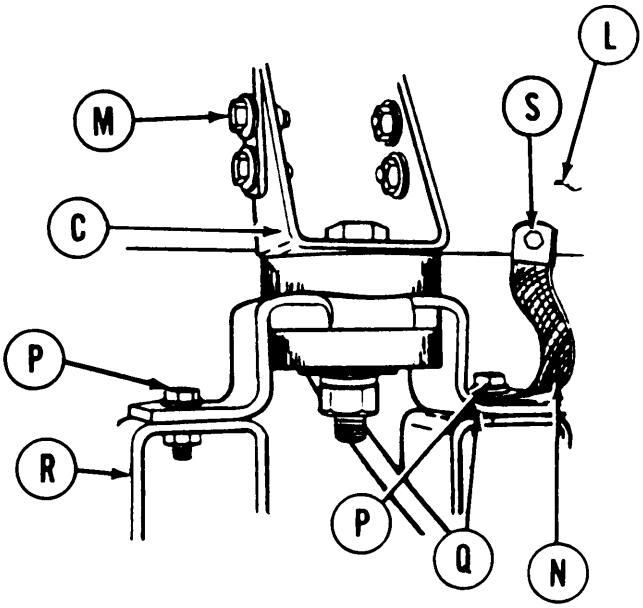

TA250935

FUEL TANK (LEFT) LOWER FRONT MOUNT REPLACEMENT (Sheet 1 of 4)

PROCEDURE INDEX

PROCEDURE	PAGE
Removal	7-382
Cleaning and Inspection	7-383
Installation	7-383

TOOLS: 15/16 in. combination box and open end wrench (2 required)
1/2 in. combination box and open end wrench
Hammer

SUPPLIES: Liquid detergent (Item 33, Appendix D)
Dry cleaning solvent (Item 55, Appendix D)
Rags (Item 65, Appendix D)
Lockwashers
Gloves (Item 69, Appendix D)
Goggles (Item 70, Appendix D)

PERSONNEL: Two

REFERENCE: TM 5-5420-202-20

PRELIMINARY PROCEDURES: Remove powerplant (page 5-2))
Remove fire extinguisher coupling and tube assembly (page 20-76)
Remove fuel shutoff cable assembly (page 7-364)
Drain left fuel tank (page 7-206)

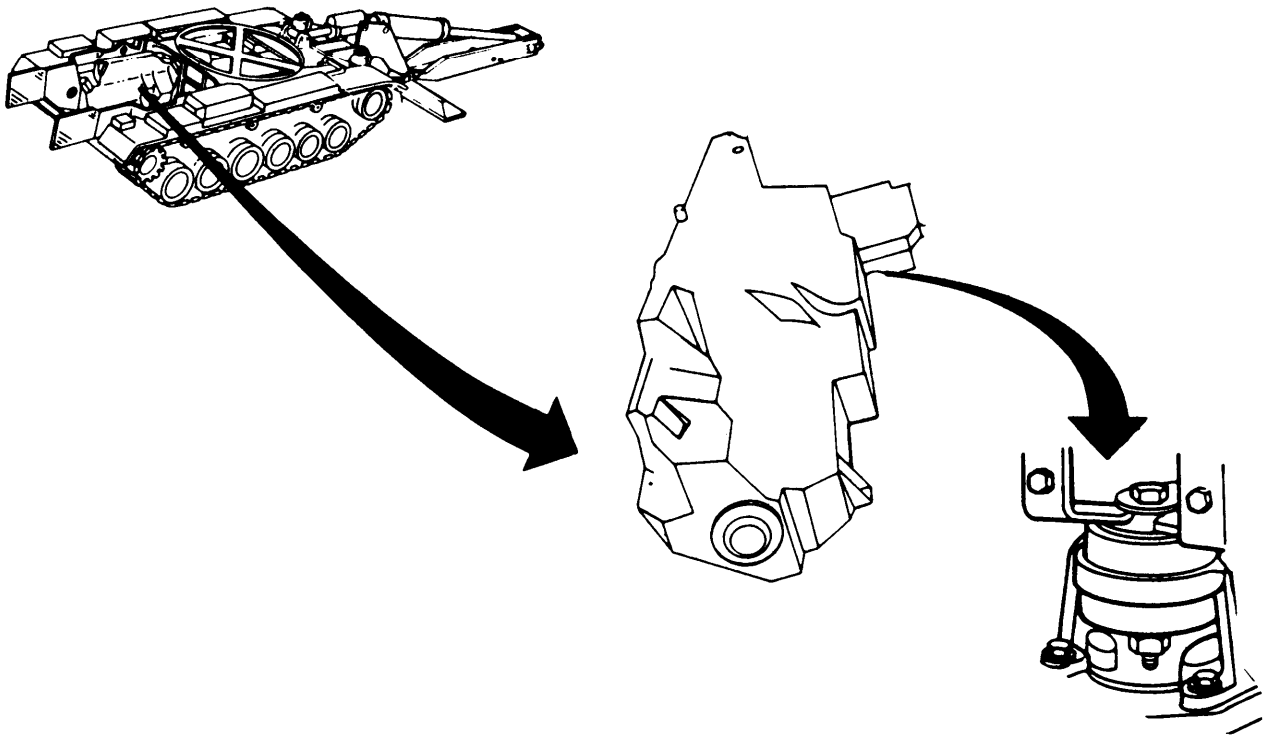

TA250936

Go on to Sheet 2

FUEL TANK (LEFT) LOWER FRONT MOUNT REPLACEMENT (Sheet 2 of 4)

REMOVAL:

1. Using 1/2 inch wrench, remove two screws and washers (A) holding front mount (B) to hull floor (C).

2. Using two 15/16 inch wrenches, loosen screw (D) and nut (E).

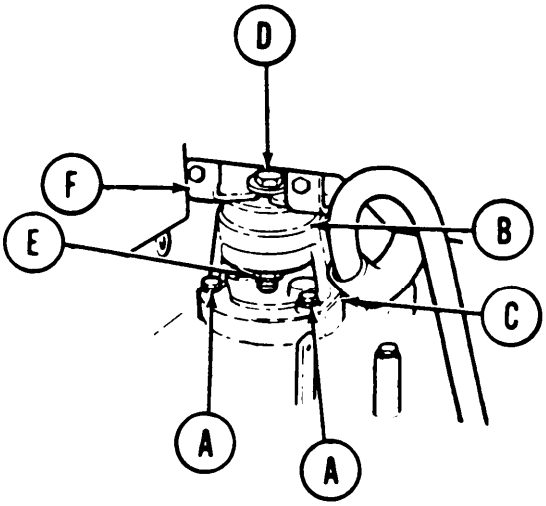

NOTE

If bracket and mount will not rotate, loosen upper rear mount (page 7-394) and upper front mount (page 7-388). Have second man lift fuel tank while rotating mount. Use hammer if required.

3. Rotate lower bracket and mount (B) 180 degrees and remove from upper bracket (F).

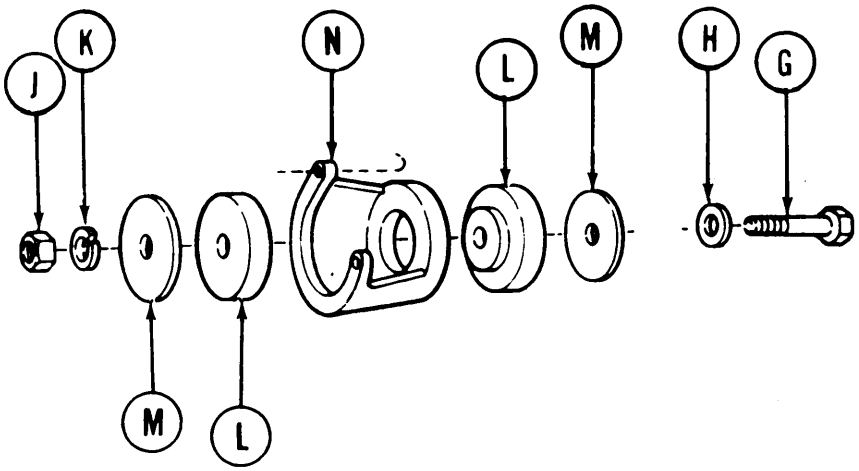

4. Using two 15/16 inch wrenches, remove screw (G), washer (H), nut (J) and lock-washer (K).

5. Separate rubber mounts (L) and washers (M) from bracket (N).

Go on to Sheet 3

TA250937

FUEL TANK (LEFT) LOWER FRONT MOUNT REPLACEMENT (Sheet 3 of 4)

CLEANING AND INSPECTION:

1. Clean rubber mounts using detergent and water. Rinse clean using water.

WARNING

Dry cleaning solvent P-D-680 is toxic and flammable. To prevent personal injury, wear protective goggles and gloves and use only in a well-ventilated area. Avoid contact with skin, eyes, and clothes and don't breathe vapors. Do not use near open flame or excessive heat. The flash point for Type #1 Dry Cleaning Solvent is 100°F (38°C) and for Type #2 is 138°F (50°C). If you become dizzy while using cleaning solvent, get fresh air immediately and get medical aid. If contact with eyes is made, wash your eyes with water and get medical aid immediately.

2. Clean metal parts with dry cleaning solvent. Wipe dry with rags.
3. Visually inspect rubber mounts for cuts, deterioration, or wear.
4. Visually inspect metal parts for wear.
5. Replace unserviceable parts.

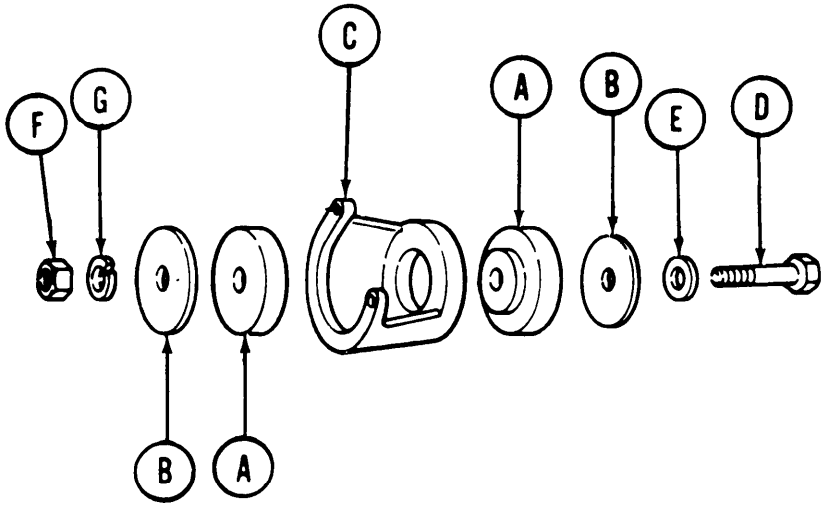

INSTALLATION:

1. Install rubber mounts (A), and washers (B) to bracket (C) using screw (D), washer (E), nut (F) and new lockwasher (G).

Go on to Sheet 4

TA250938

FUEL TANK (LEFT) LOWER FRONT MOUNT REPLACEMENT (Sheet 4 of 4)

NOTE

If bracket will not install, have second man lift on tank. If upper rear mount (page 7-394) upper front mount (page 7-388) were loosened, in step 3 of removal, tighten them.

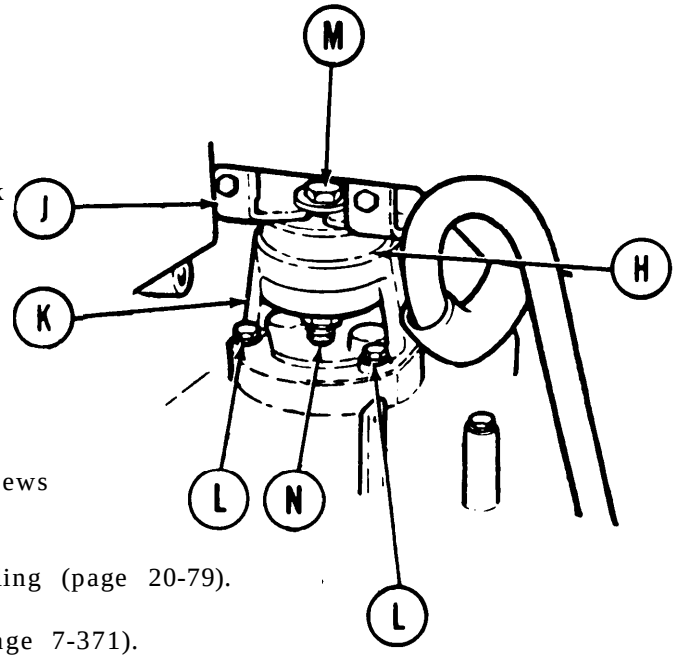

2. Install assembled mount (H) to fuel tank bracket (J). After mount is installed rotate 180 degrees to aline bracket (K) to hull floor. Secure to hull floor using two screws and washers (L).

3. Using two 15/16 inch wrenches, tighten screw (M) and nut (N).

4. Using 1/2 inch wrench, tighten two screws (L).

5. Install fire extinguisher tube and coupling (page 20-79).

6. Install fuel shut-off cable assembly (page 7-371).

7. Install powerplant (page 5-14).

8. Fill left fuel tank (TM 5-5420-202-10).

End of Task

TA250939

FUEL TANK (RIGHT) LOWER FRONT MOUNT REPLACEMENT (Sheet 1 of 3)

PROCEDURE INDEX

PROCEDURE	PAGE
Removal	7-386
Cleaning and Inspection	7-387
Installation	7-387

TOOLS: 15/16 in. combination box and open end wrench
15/16 in. socket with 1/2 in. drive
Ratchet with 1/2 in. drive
1/2 in. combination box and open end wrench (2 required)

SUPPLIES: Liquid detergent (Item 33, Appendix D)
Dry cleaning solvent (Item 55, Appendix D)
Rags (Item 65, Appendix D)
Gloves (Item 69, Appendix D)
Goggles (Item 70, Appendix D)
Lockwasher

REFERENCES: TM 5-5420-202-10

PRELIMINARY PROCEDURES: Remove powerplant (page 5-2)
Remove fire extinguisher lines (manifold to right fuel tank) (page 20-71)
Drain right fuel tank (page 7-206)

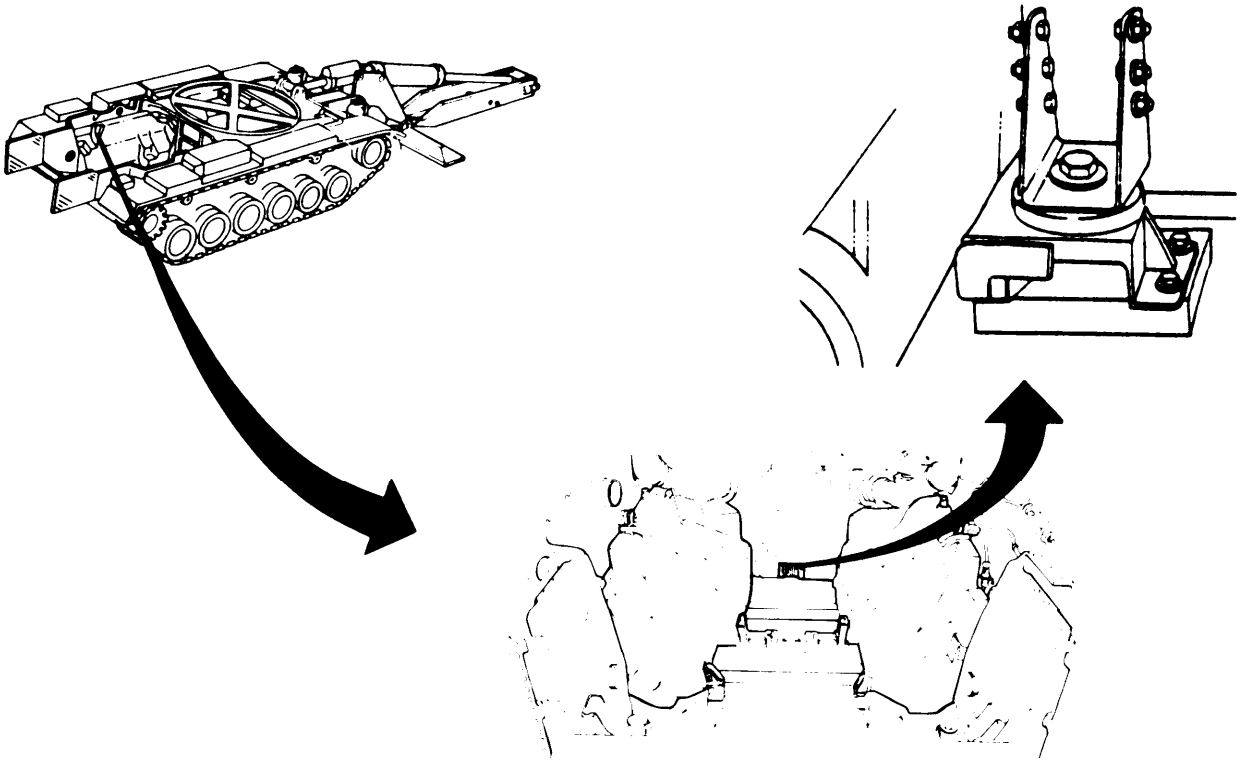

Go on to Sheet 2

TA250940

FUEL TANK (RIGHT) LOWER FRONT MOUNT REPLACEMENT (Sheet 2 of 3)

REMOVAL:

1. Using 1/2 inch wrench, remove four screws and lockwashers (A) holding mount (B).

2. Using two 1/2 inch wrenches, remove six bolts, washers, lockwashers, and nuts (C) holding mount (B) to fuel tank (D). Remove mount (B) from fuel tank (D).

3. Remove bracket (E).

NOTE

It may be necessary to loosen lower rear mount (page 7-377), upper rear mount (page 7-394, and upper front mount (page 7-398) to remove mount (B).

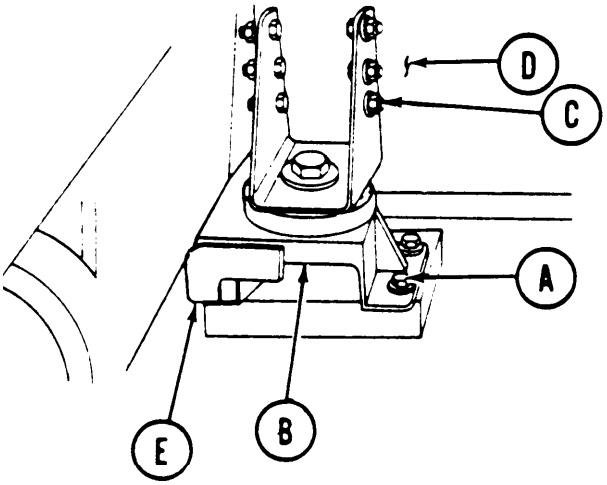

4. Using 15/16 inch socket on screw (F) and 15/16 inch wrench on nut (G), remove screw (F), washer (H), nut (G), and lockwasher (J).

5. Separate bracket (K), rubber mounts (L), washers (M), and bracket (N).

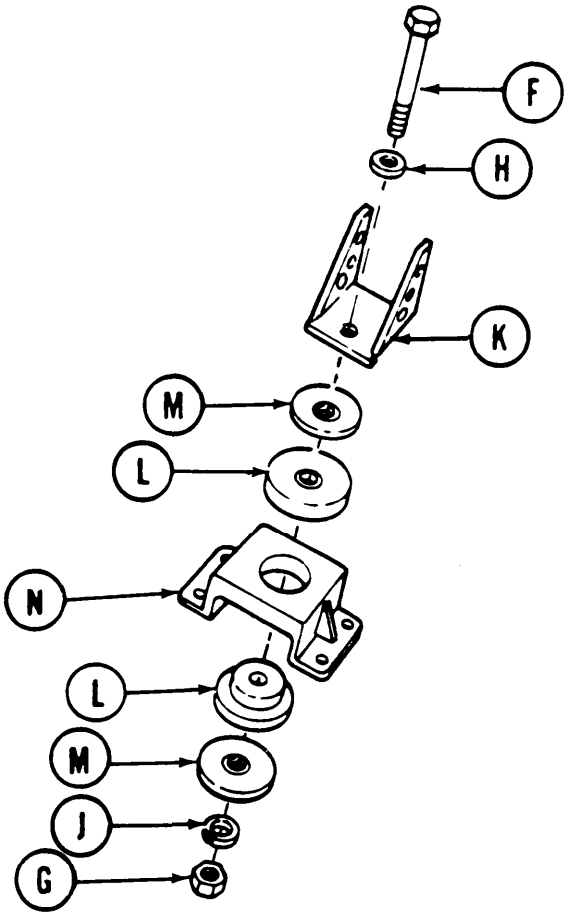

Go on to Sheet 3

FUEL TANK (RIGHT) LOWER FRONT MOUNT REPLACEMENT (Sheet 3 of 3)

CLEANING AND INSPECTION:

1. Clean rubber mounts using detergent and water. Rinse clean using water.

WARNING

Dry cleaning solvent P-D-680 is toxic and flammable. To prevent personal injury, wear protective goggles and gloves and use only in a well-ventilated area. Avoid contact with skin, eyes, and clothes and don't breathe vapors. Do not use near open flame or excessive heat. The flash point for Type #1 Dry Cleaning Solvent is 100°F (38°C) and for Type #2 is 138°F (50°C). If you become dizzy while using cleaning solvent, get fresh air immediately and get medical aid. If contact with eyes is made, wash your eyes with water and get medical aid immediately.

2. Clean metal parts using dry cleaning solvent (Item 55, Appendix D). Wipe dry with rags.

3. Visually inspect rubber mounts for cuts, deterioration, or wear.

4. Visually inspect metal parts for wear.

5. Replace unserviceable parts.

INSTALLATION:

1. Install rubber mounts (A) and washers (B) to brackets (C) and (D) using screw (E), washer (F), new lockwasher (G), and nut (H).

2. Using 15/16 inch socket on screw (E) and 15/16 inch wrench on nut (H), tighten screw (E) and nut (H).

3. Install mount (J) to fuel tank (K) using six bolts, washers, new lockwashers, and nuts (L).

4. Using two 1/2 inch wrenches, tighten six bolts and nuts (L).

5. Install bracket (M).

6. Using 1/2 inch wrench, install four screws and new lockwashers (N).

7. Install fire extinguisher lines (page 20-75),

8. Install powerplant (page 5-14).

9. Fill right fuel tank (TM 5-5420-202-10).

End of Task

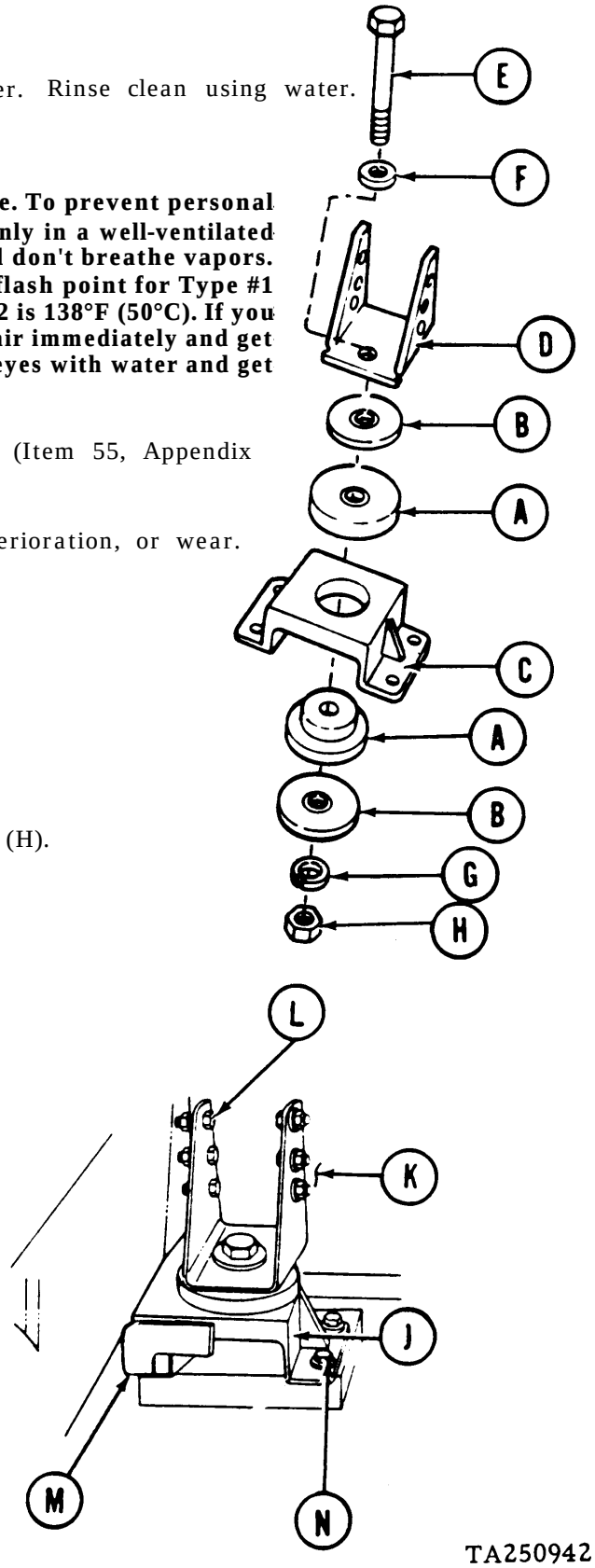

FUEL TANKS (LEFT AND RIGHT) UPPER FRONT MOUNT REPLACEMENT (Sheet 1 of 6)

PROCEDURE INDEX

PROCEDURE	PAGE
Removal	7-388
Cleaning and Inspection	7-390
Installation	7-391

TOOLS:
9/16 in. deep socket with 1/2 in. drive
Slip joint pliers
Ratchet with 1/2 in. drive
15/16 in. socket with 1/2 in. drive
Torque wrench with 1/2 in. drive (0-175 lb-ft) (0-237 N•m)
15/16 in. combination box and open end wrench
Diagonal pliers
1/2 in. socket with 1/2 in. drive
9/16 in. wrench

SUPPLIES:
Dry cleaning solvent (Item 55, Appendix D)
Rags (Item 65, Appendix D)
Liquid detergent (Item 11, Appendix B)
Lockwire (Item 62, Appendix D)
Gloves (Item 69, Appendix D)
Goggles (Item 70, Appendix D)
Sealing Compound (Item 23, Appendix B)
Lockwashers

PRELIMINARY PROCEDURES:
Remove right fuel tank (page 7-333) for right mount replacement
Remove left fuel tank (page 7-348) for left mount replacement

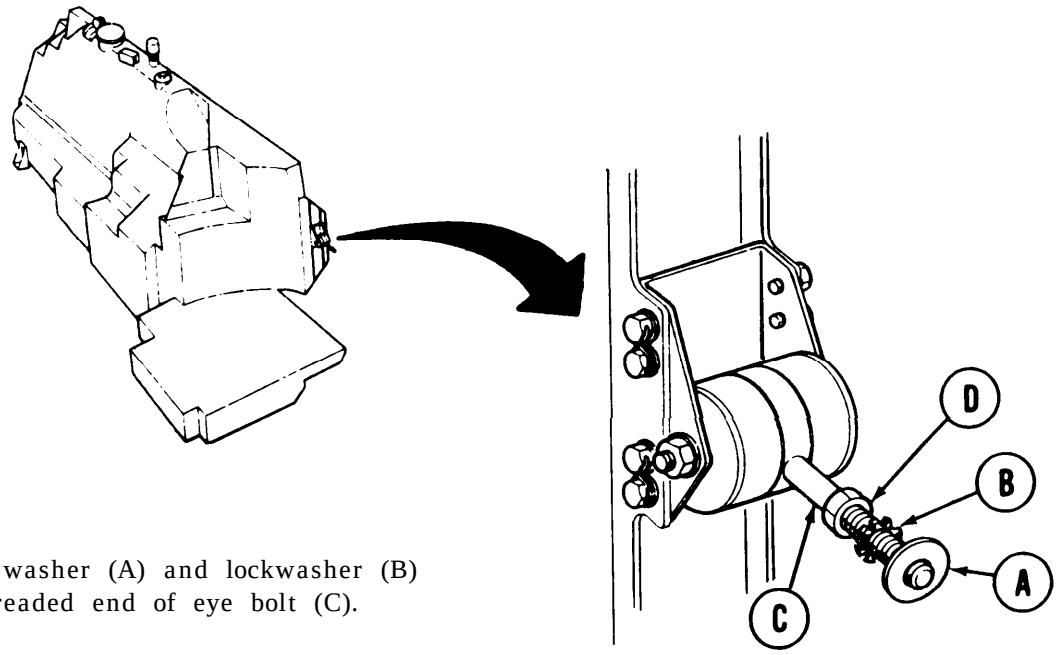

REMOVAL:

1. Remove washer (A) and lockwasher (B) from threaded end of eye bolt (C).

2. Using 15/16 inch wrench, remove nut (D) from eye bolt (C).

Go on to Sheet 2

FUEL TANKS (LEFT AND RIGHT) UPPER FRONT MOUNT REPLACEMENT
(Sheet 2 of 6)

3. Using 15/16 inch wrench to hold screw and 15/16 inch socket to loosen nut (E), remove nut (E) and lockwasher.

4. Pull screw (F) out of bracket (G).

5. Remove two washers (H), two mounts (J), and eye bolt (C) from bracket (G).

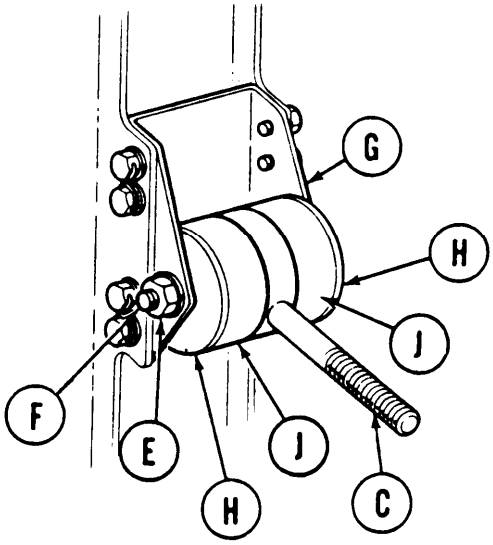

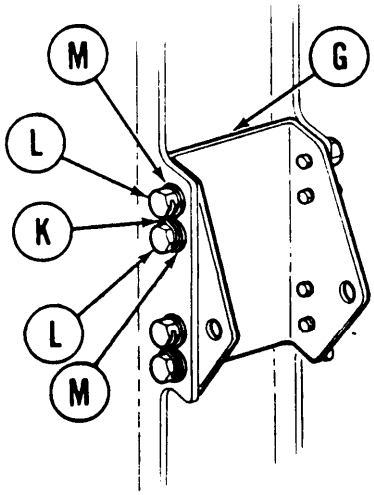

6. Using diagonal pliers, cut lockwire (K) from eight screws (L).

7. Using 1/2 inch socket, remove eight screws (L) and lockwashers (M) securing bracket (G) to fuel tank.

8. Remove bracket (G).

Go on to Sheet 3

TA250944

FUEL TANKS (LEFT AND RIGHT) UPPER FRONT MOUNT REPLACEMENT (Sheet 3 of 6)

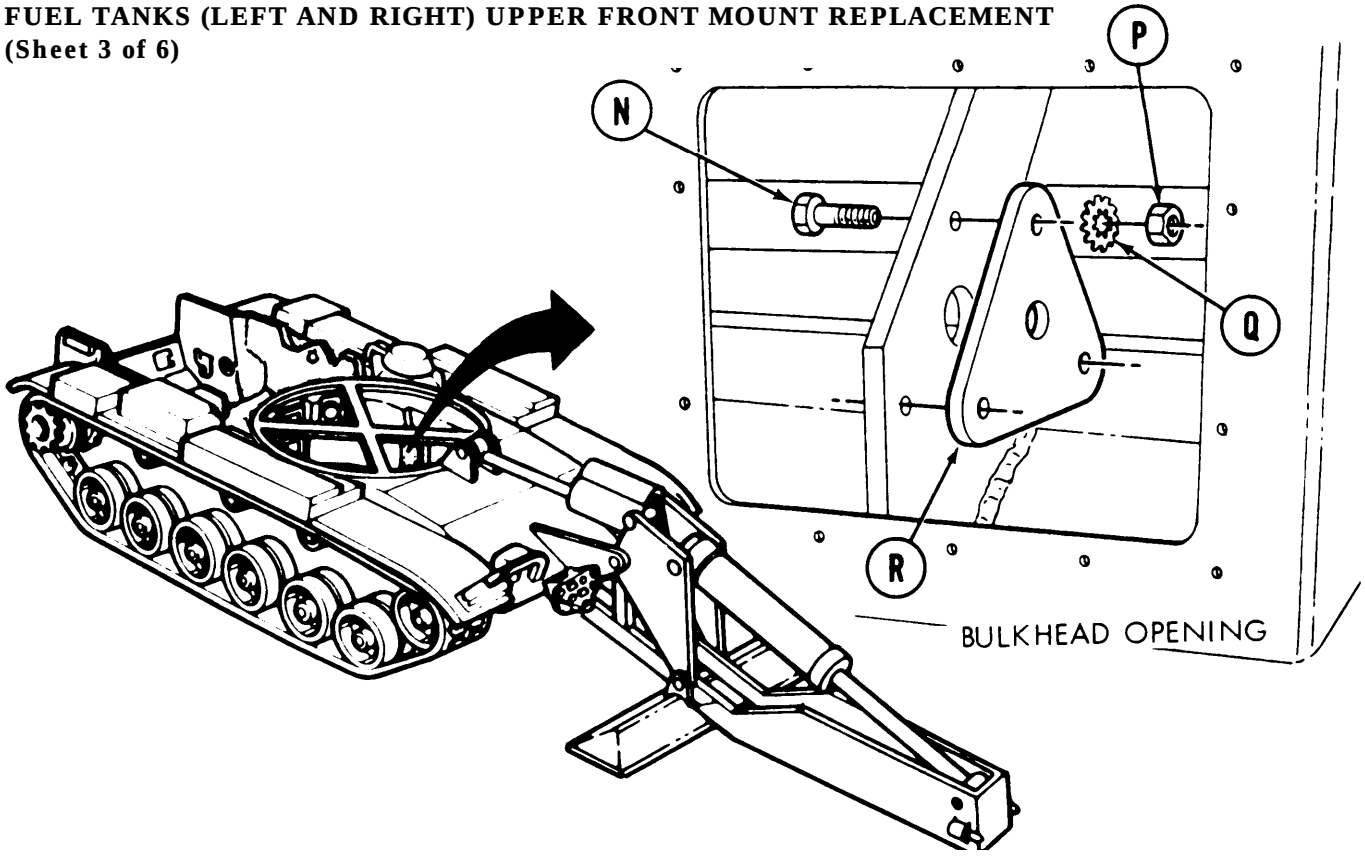

9. Go into vehicle and, using 9/16 inch wrench to hold screws (N) and 9/16 inch socket and ratchet to loosen nuts (P), remove three nuts (P), lockwashers (Q), and screws (N) securing plate (R) at corner bulkhead opening.

10. Remove mounting plate (R).

CLEANING AND INSPECTION:

1. Clean rubber mounts with detergent and warm water.

WARNING

Dry cleaning solvent P-D-680 is toxic and flammable. To prevent personal injury, wear protective goggles and gloves and use only in a well-ventilated area. Avoid contact with skin, eyes, and clothes and don't breathe vapors. Do not use near open flame or excessive heat. The flash point for Type #1 Dry Cleaning Solvent is 100°F (38°C) and for Type #2 is 138°F (50°C). If you become dizzy while using cleaning solvent, get fresh air immediately and get medical aid. If contact with eyes is made, wash your eyes with water and get medical aid immediately.

2. Clean metal parts with dry cleaning solvent. Using rag, wipe parts dry.

3. Inspect mounts for cuts or wear.

4. Inspect metal parts for damage, wear, or stripped threads. Repair as required. TA250945

FUEL TANKS (LEFT AND RIGHT) UPPER FRONT MOUNT REPLACEMENT (Sheet 4 of 6)

INSTALLATION:

CAUTION

Make sure bracket (A) is not installed upside down. Could cause damage to fuel tank.

1. Position mounting bracket (A) as shown to brackets on fuel tank.

2. Aline eight holes of mounting bracket (A) to holes on fuel tank.

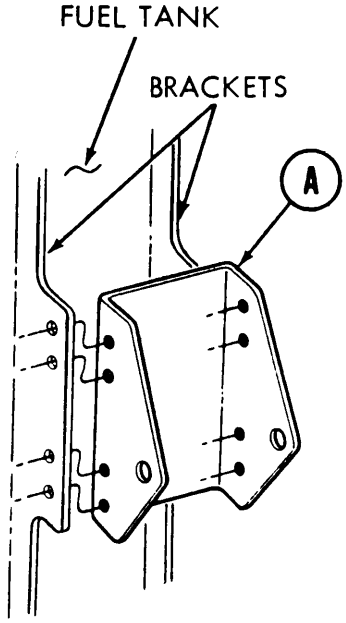

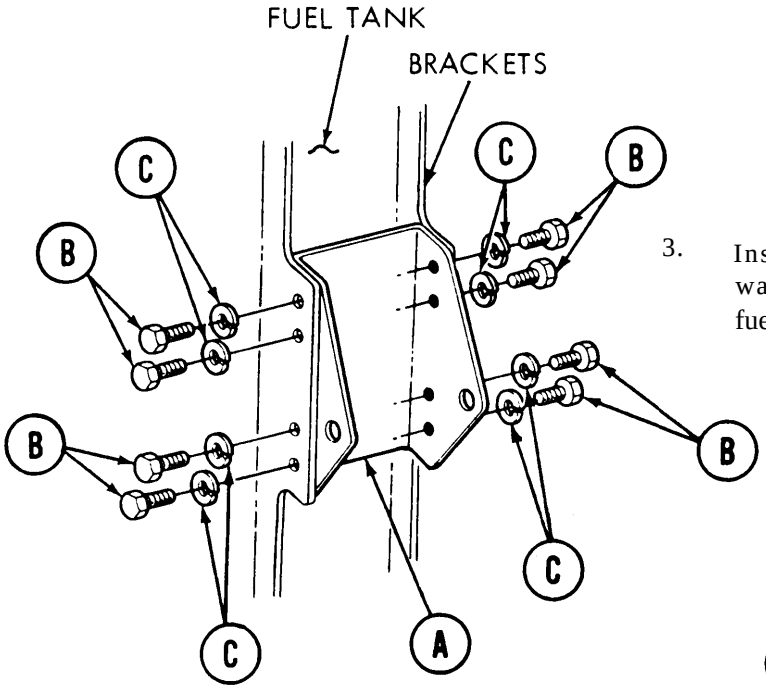

3. Insert eight screws (B) with new lock-washers (C) to secure bracket (A) to fuel tank.

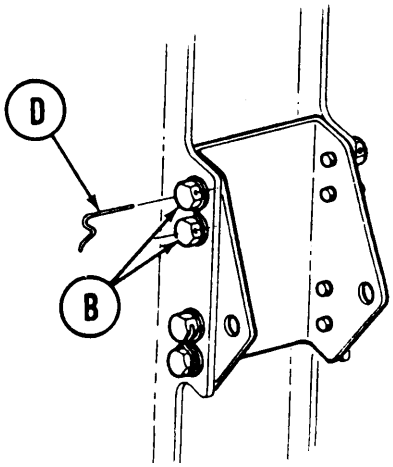

4. Using 9/16 inch socket and torque wrench, tighten eight screws (B) to 13 lb-ft (18 N· m).

5. Using slip joint pliers, install safety wire (D) through eight screws (B) in pairs.

Go on to Sheet 5

TA250946

FUEL TANKS (LEFT AND RIGHT) UPPER FRONT MOUNT REPLACEMENT (Sheet 5 of 6)

6. Assemble two mounts (E) and two washers (F) to eye bolt (G) and install assembly in bracket (A).

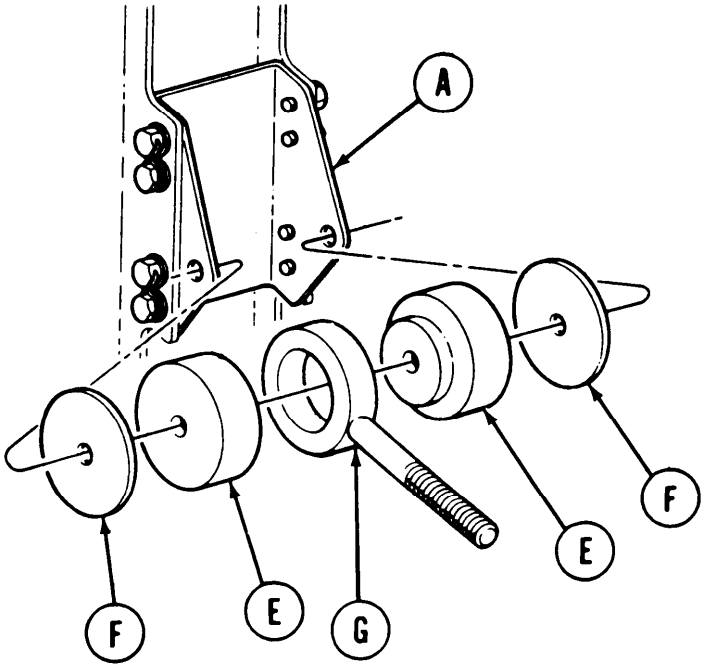

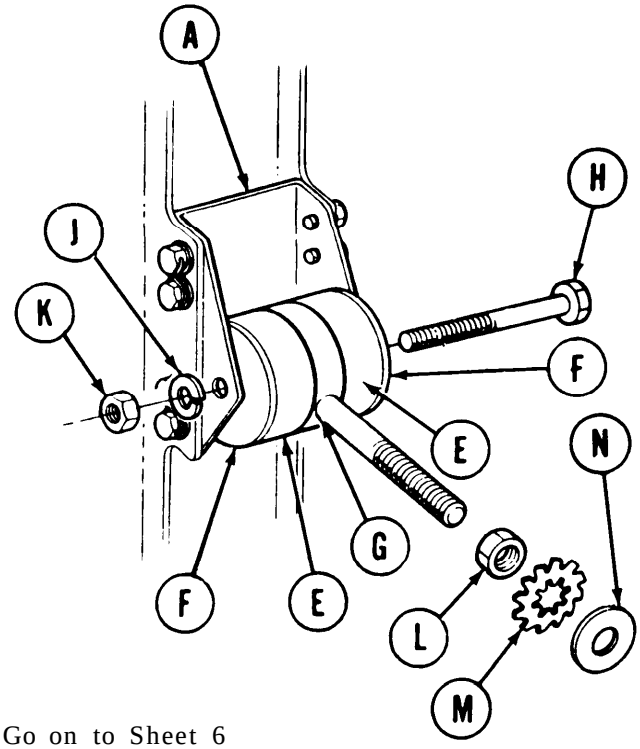

7. Insert screw (H) through alined holes of mounts (E), washers (F), and bracket (A).

8. Apply sealing compound to all male threads. Install new lockwasher (J) and nut (K) on threaded end of screw (H). Using 15/16-inch wrench to hold screw (H), use 15/16-inch socket and tighten nut (K).

9. Using 15/16 inch wrench, screw nut (L) onto threaded end of eye bolt (G). Install new lockwasher (M) and washer (N) onto eye bolt (G).

Go on to Sheet 6

FUEL TANKS (LEFT AND RIGHT) UPPER FRONT MOUNT REPLACEMENT (Sheet 6 of 6)

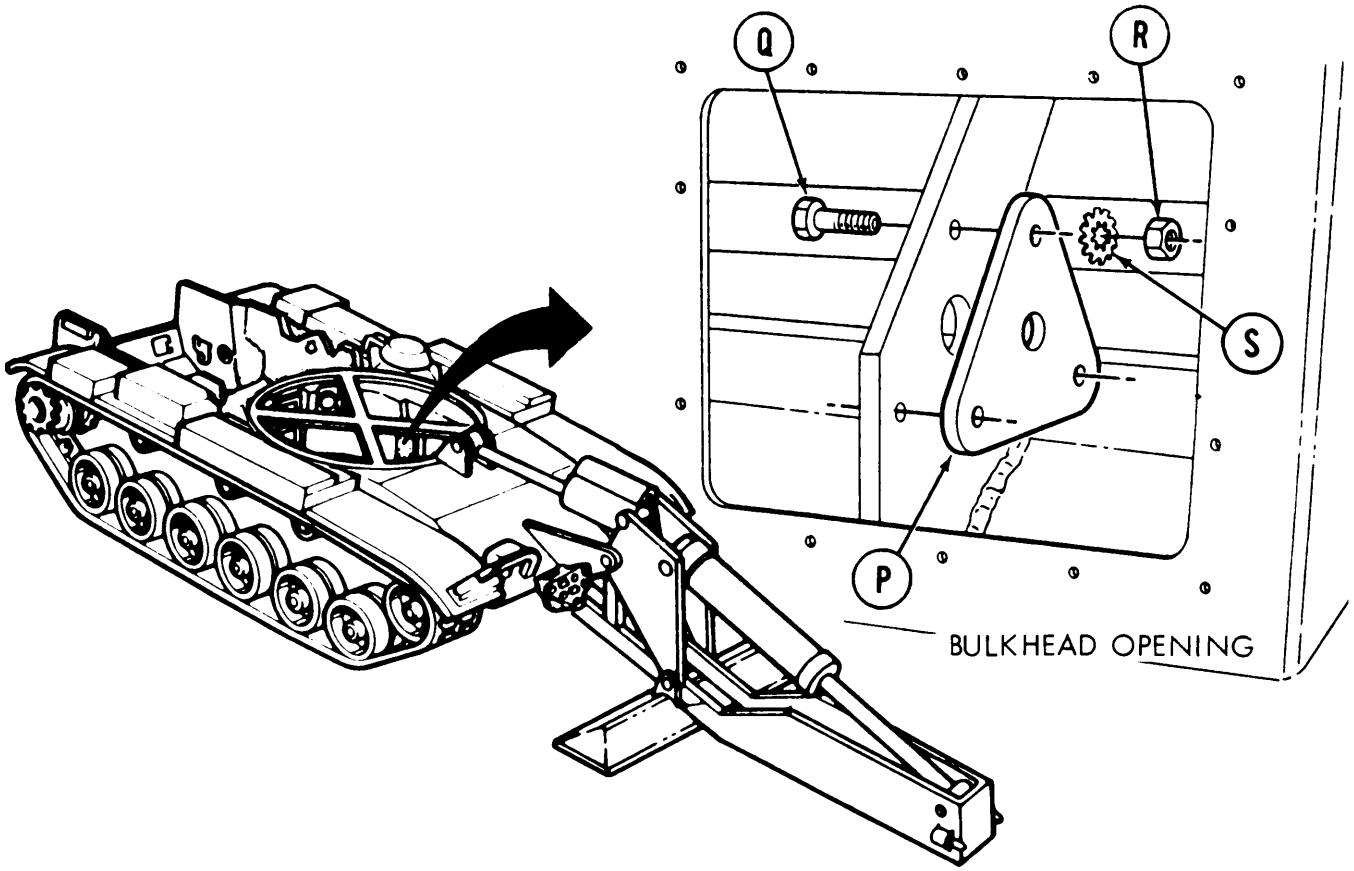

10. Position plate (P) to mounting holes.

11. Insert three screws (Q) securing plate.

12. Install three nuts (R) and new lockwashers (S) onto screws (Q) securing plate (P) at corner bulkhead opening.

13. Using 9/16 inch socket and torque wrench, tighten three nuts (R) to 14-16 lb-ft (18-22 N•m).

14. Install right fuel tank (page 7-341) if removed for right mount replacement.

15. Install left fuel tank (page 7-356) if removed for left mount replacement.

End of Task

FUEL TANKS (LEFT AND RIGHT) UPPER REAR MOUNT REPLACEMENT (Sheet 1 of 3)

TOOLS: Ratchet with 1/2 in. drive
1/2 in. combination box and open end wrench (2 required)
15/16 in. socket with 1/2 in. drive
15/16 in. combination box and open end wrench
Alining punch
Hammer
1/2 in. socket with 1/2 in. drive

SUPPLIES: Liquid detergent (Item 33, Appendix BD)
Dry cleaning solvent (Item 55, Appendix D)
Rags (Item 65, Appendix D)
Lockwashers
Gloves (Item 69, Appendix D)
Goggles (Item 70, Appendix D)

REFERENCES: TM 5-5420-202-10

PRELIMINARY PROCEDURES: Open intake grille doors to gain access to fuel tank (TM 5-5420-202-10)
Remove air cleaner intake hoses (page 7-84)

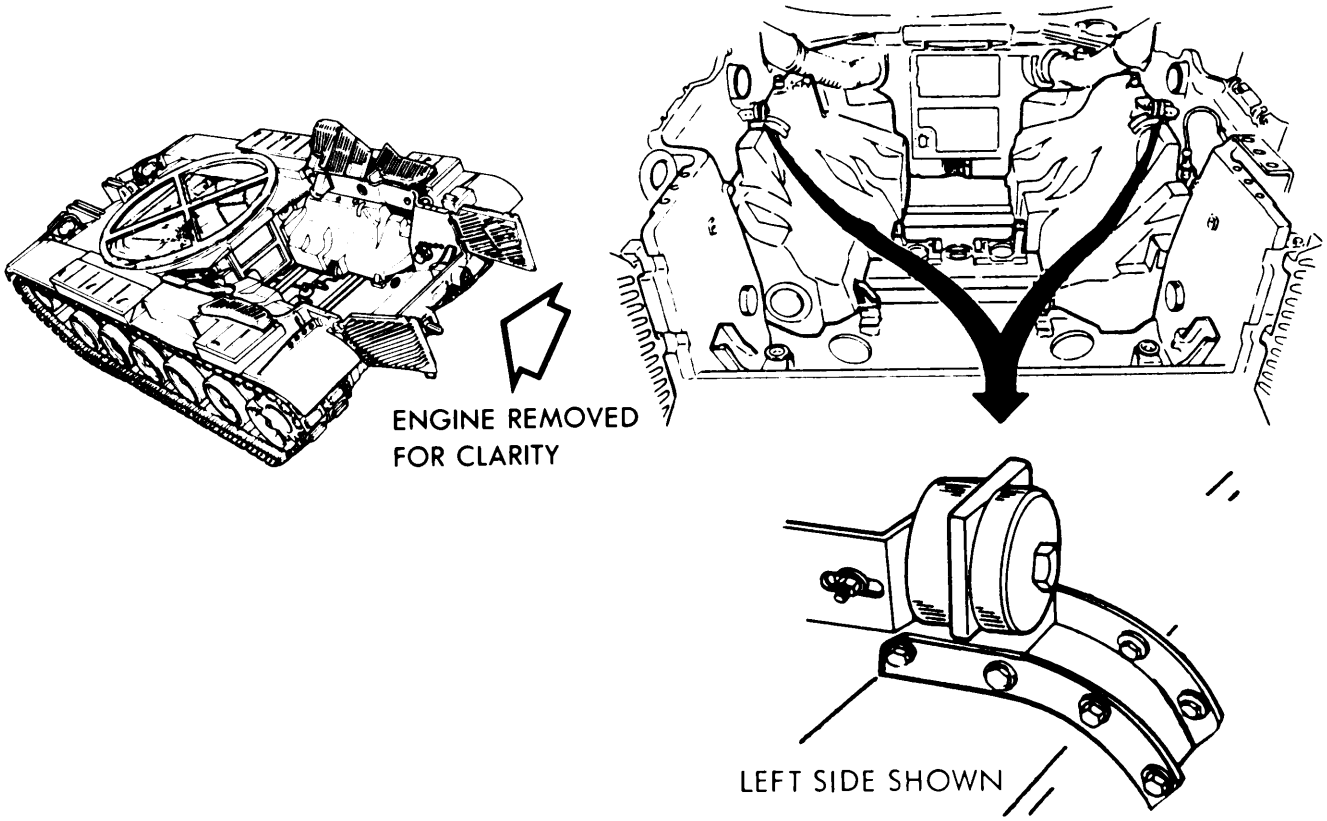

Go on to Sheet 2

TA250949

FUEL TANKS (LEFT AND RIGHT) UPPER REAR MOUNT REPLACEMENT (Sheet 2 of 3)

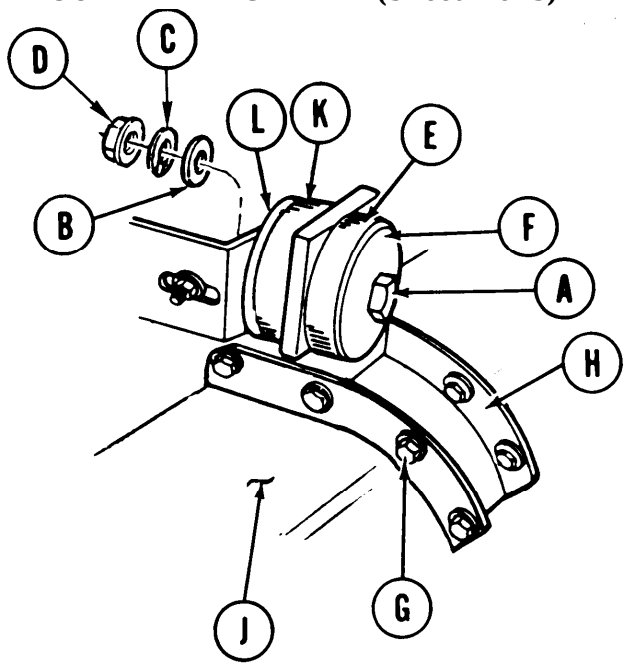

REMOVAL:

1. Using 15/16 inch socket, and 15/16 inch wrench, remove screw (A), washer (B), lockwasher (C), and nut (D), rubber mount (E), and washer (F).

2. Using 1/2 inch wrench and 1/2 inch socket, remove eight screws, washers, and nuts (G) holding bracket (H) to fuel tank (J).

3. Remove bracket (H), mount (K) and washer (L).

CLEANING AND INSPECTION:

1. Clean rubber mounts with detergent and water. Rinse clean with water.

WARNING

Dry cleaning solvent P-D-680 is toxic and flammable. To prevent personal injury, wear protective goggles and gloves and use only in a well-ventilated area. Avoid contact with skin, eyes, and clothes and don't breathe vapors. Do not use near open flame or excessive heat. The flash point for Type #1 Dry Cleaning Solvent is 100°F (38°C) and for Type #2 is 138°F (50°C). If you become dizzy while using cleaning solvent, get fresh air immediately and get medical aid. If contact with eyes is made, wash your eyes with water and get medical aid immediately.

2. Clean metal parts using dry cleaning solvent. Wipe dry with rags.

3. Visually inspect rubber mounts for cuts, deterioration, or wear.

4. Visually inspect all metal parts for wear.

5. Replace unserviceable parts.

Go on to Sheet 3

TA250950

FUEL TANKS (LEFT AND RIGHT) UPPER REAR MOUNT REPLACEMENT (Sheet 3 of 3)

INSTALLATION:

1. Install bracket (A), rubber mounts (B), washers (C) to hull bracket (D) using screw (E), washer (F), new lockwasher (G) and nut (H). Finger tighten.

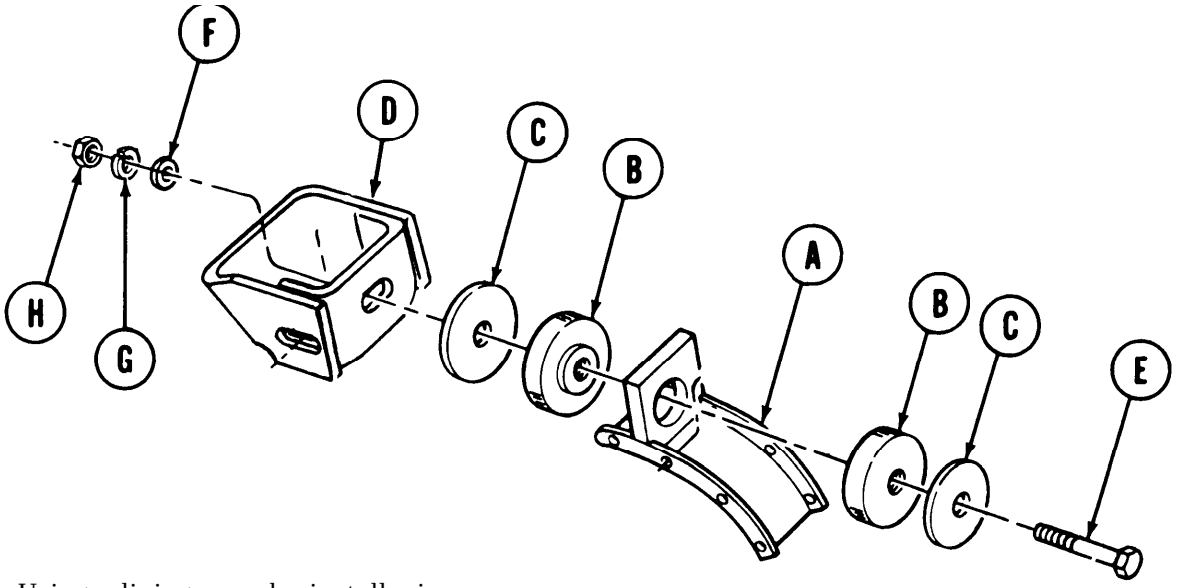

2. Using alining punch, install six screws, washers, and nuts (J) and finger tighten.

3. Insert alining punch into hole for screw (M) facing rear of vehicle and aline bracket (A) and hull bracket (D).

4. Using 1/2 inch wrench and 1/2 inch socket, tighten screws (J).

5. Remove punch. Install screws, washers, and nuts (M).

6. Using two 1/2 inch wrenches, tighten two screws (M).

7. Using 15/16 inch socket on screw (E) and 15/16 inch wrench on nut (H), tighten screw (E).

8. Install air cleaner intake hoses (page 7-85).

9. Close intake grille doors (TM 5-5420-202-10).

End of Task

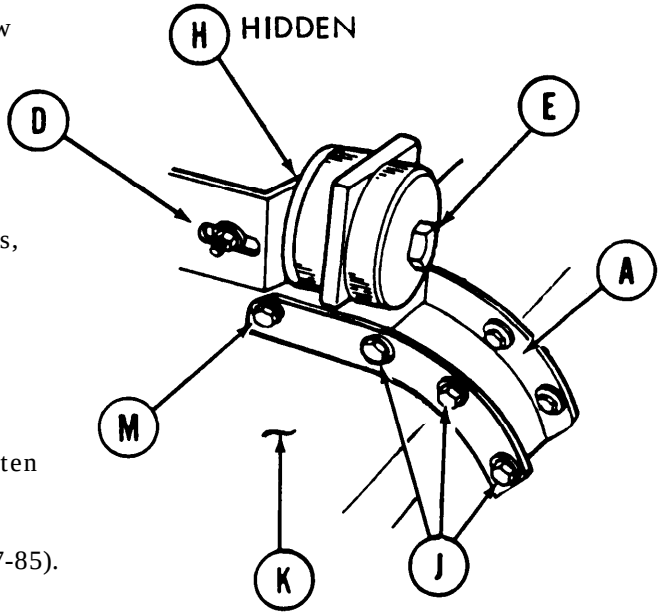

TA250951

FUEL TANK (LEFT) LOWER FRONT MOUNTING BRACKET REPLACEMENT (Sheet 1 of 2)

TOOLS: 1/2 in. combination box and open end wrench (2 required)

SUPPLIES: Lockwashers

PRELIMINARY PROCEDURE: Remove left fuel tank (page 7-348)

REMOVAL:

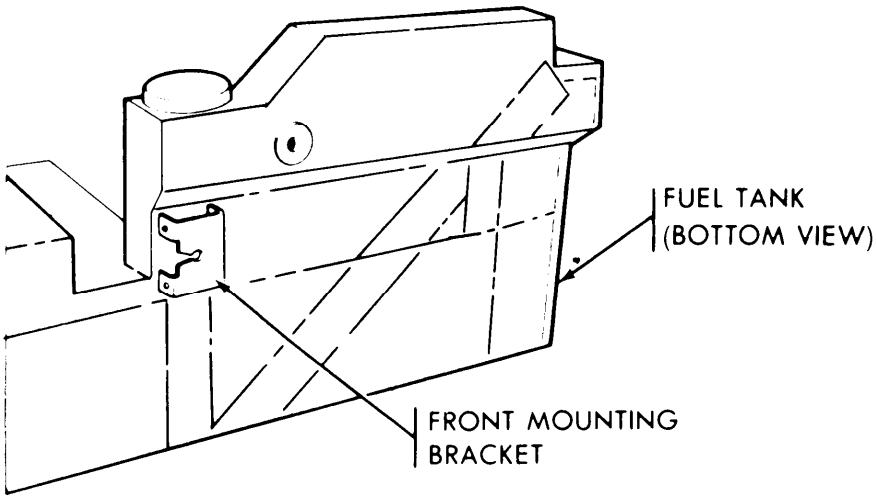

1. Position fuel tank so lower front mounting bracket can be removed from bottom of tank.

Go on to Sheet 2

TA250952

FUEL TANK (LEFT) LOWER FRONT MOUNTING BRACKET REPLACEMENT (Sheet 2 of 2)

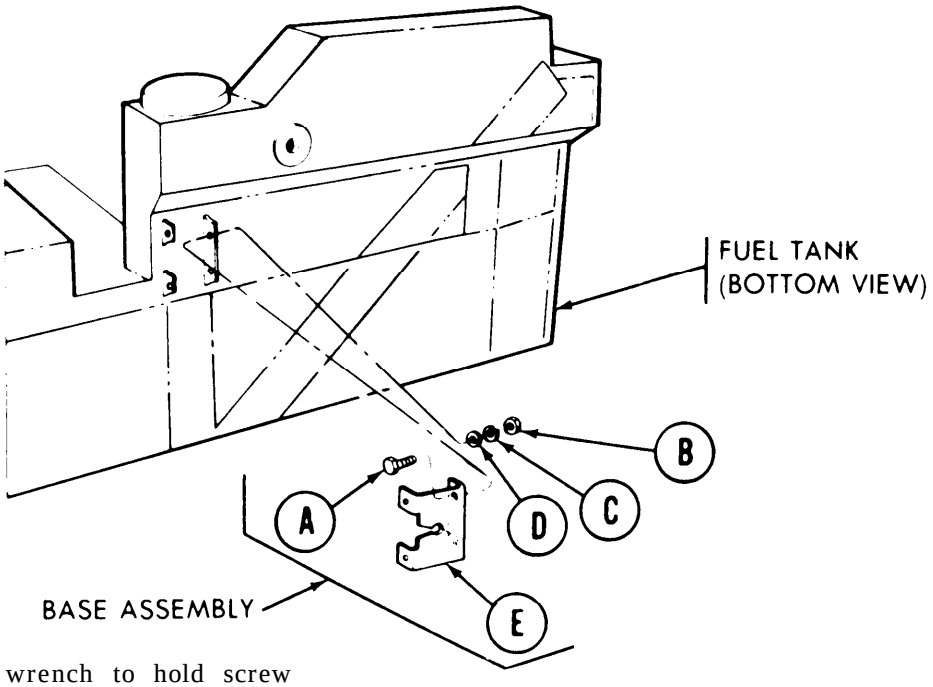

2. Using 1/2 inch wrench to hold screw (A) and another 1/2 inch wrench to loosen nut (B), remove four nuts (B), lockwashers (C), flat washers (D), and screws (A).

3. Remove mounting bracket (E) from fuel tank.

INSTALLATION:

1. Position mounting bracket (A) onto mounting brackets of fuel tank. Insert four screws (B) through alined holes.

2. Install four flat washers (C), new lockwashers (D), and nuts (E) onto screws (B) securing mounting bracket assembly to fuel tank.

3. Using fingers, tighten four nuts (E).

4. Using 1/2 inch wrench to hold screw (B) and another 1/2 inch wrench to nut (E), tighten all four nuts (E).

5. Install left fuel tank (page 7-356).

End of Task

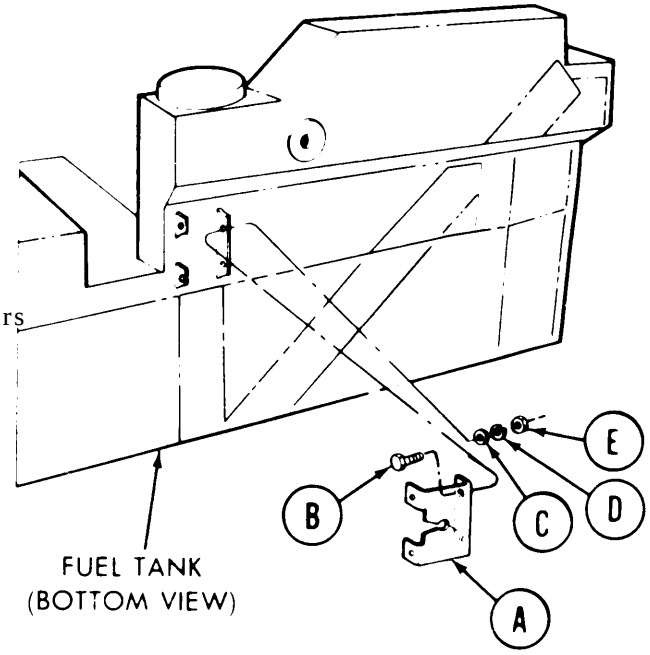

TA250953

CHAPTER 8

EXHAUST SYSTEM MAINTENANCE INDEX

PROCEDURE	PAGE
Exhaust Pipe Cap Assembly Replacement	8-2
Exhaust Pipe (Left Side) Replacement	8-5
Exhaust Pipe (Right Side) Replacement	8-9
Intake Tube and Hoses Replacement	8-13
Cap Assembly Replacement	8-14
Intermediate Scavenger Tube Replacement	8-17
Left Exhaust Ejector Tube Replacement	8-21
Right Exhaust Ejector Tube Replacement	8-25

EXHAUST PIPE CAP ASSEMBLY REPLACEMENT (Sheet 1 of 3)

TOOLS: 7/16 in. combination box and open end wrench (2 required)

SUPPLIES: Self-locking nut

REFERENCE: TM 5-5420-202-10

PRELIMINARY PROCEDURE: Open engine exhaust doors (TM 5-5420-202-10)

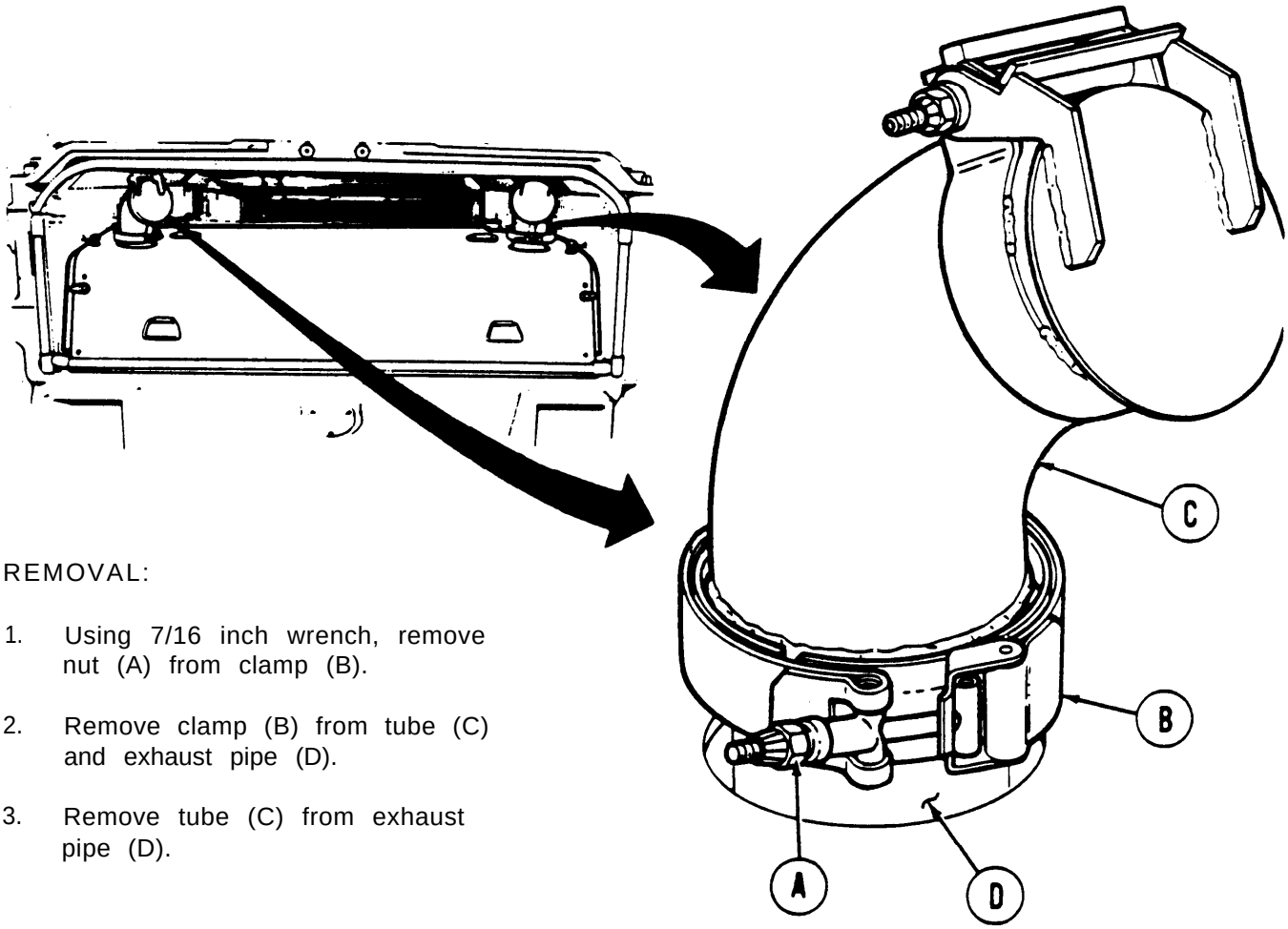

REMOVAL:

1. Using 7/16 inch wrench, remove nut (A) from clamp (B).
2. Remove clamp (B) from tube (C) and exhaust pipe (D).
3. Remove tube (C) from exhaust pipe (D).

Go on to Sheet 2

TA248455

EXHAUST PIPE CAP ASSEMBLY REPLACEMENT (Sheet 2 of 3)

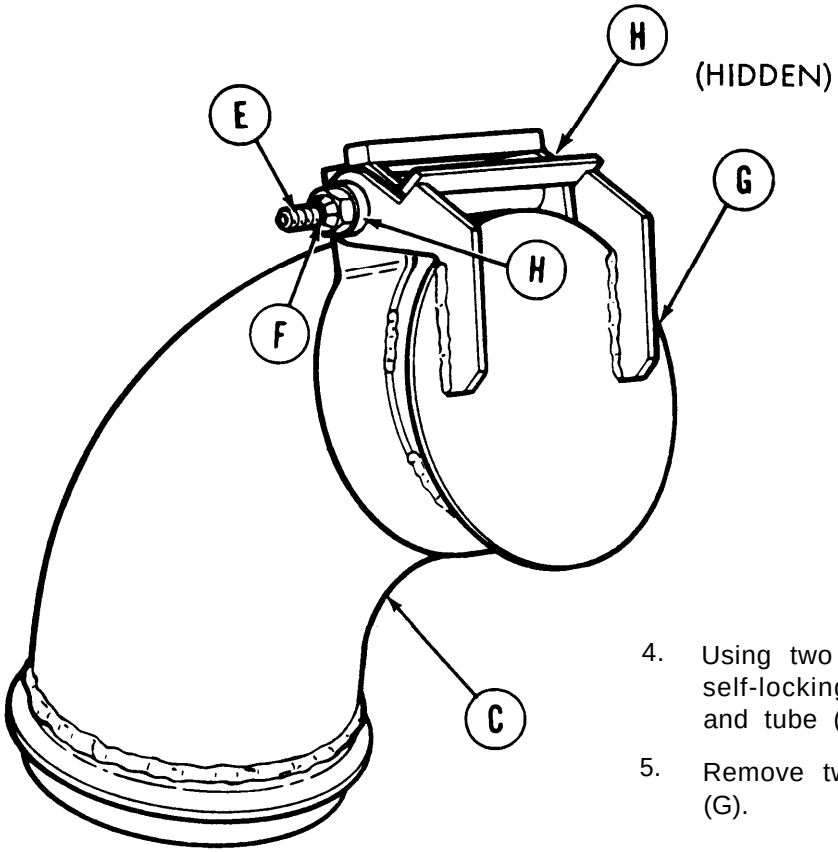

4. Using two wrenches, remove bolt (E) and self-locking nut (F) from tube cover (G) and tube (C).

5. Remove two spacers (H) from tube cover (G).

6. Remove tube cover (G) from tube (C).

TA248456

Go on to Sheet 3

EXHAUST PIPE CAP ASSEMBLY REPLACEMENT (Sheet 3 of 3)

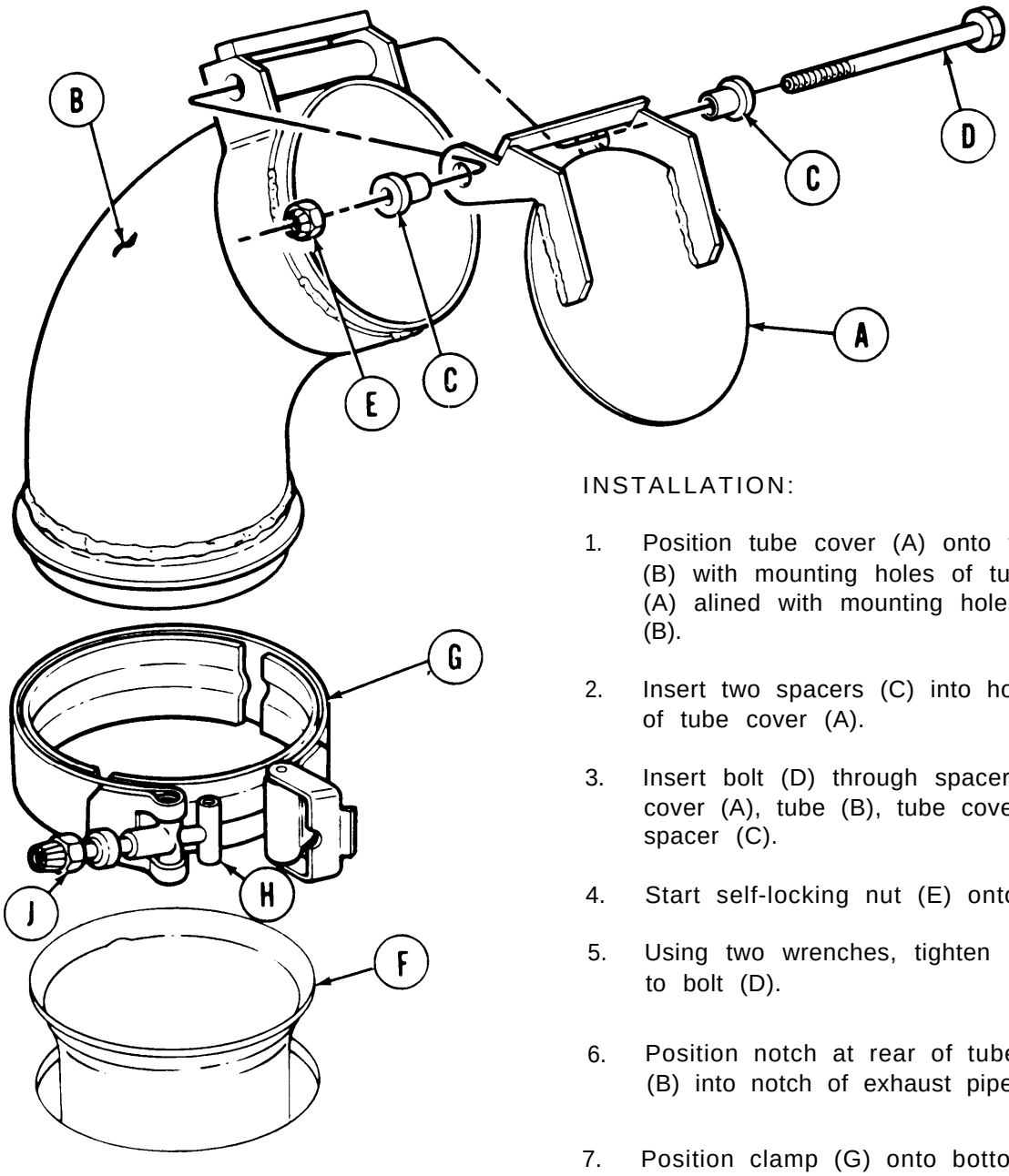

INSTALLATION:

1. Position tube cover (A) onto top of tube (B) with mounting holes of tube cover (A) alined with mounting holes in tube (B).

2. Insert two spacers (C) into holes in top of tube cover (A).

3. Insert bolt (D) through spacer (C), tube cover (A), tube (B), tube cover (A), and spacer (C).

4. Start self-locking nut (E) onto bolt (D).

5. Using two wrenches, tighten nut (E) to bolt (D).

6. Position notch at rear of tube (B) into notch of exhaust pipe (F).

7. Position clamp (G) onto bottom of tube (B) and exhaust pipe (F). Latch clamp together with bolt (H).

8. Using wrench, tighten nut (J) on clamp (G) to hold tube (B) to exhaust pipe (F).

9. Close engine exhaust doors (TM 5-5420-202-10).

End of Task

TA248457

EXHAUST PIPE (LEFT SIDE) REPLACEMENT (Sheet 1 of 4)

PROCEDURE INDEX

PROCEDURE	PAGE
Removal	8-5
Installation	8-7

TOOLS: Ratchet with 1/2 in. drive
10 in. extension with 1/2 in. drive
9/16 in. socket with 1/2 in.drive
Flat-tip screwdriver
Cross-tip screwdriver
5/16 in. combination box and open end wrench

SUPPLIES: Gasket

REFERENCE: TM 5-5420-202-10

PRELIMINARY PROCEDURES: Open top grille doors (TM 5-5420-202-10)
Remove transmission shroud (page 9-2)

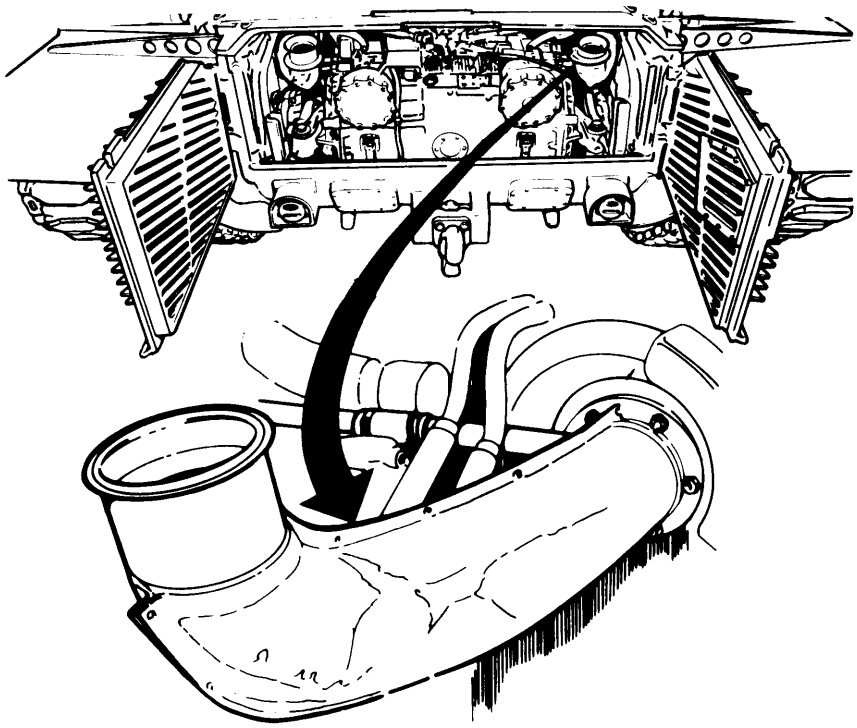

Go on to Sheet 2.

TA248458

EXHAUST PIPE (LEFT SIDE) REPLACEMENT (Sheet 2 of 4)

REMOVAL:

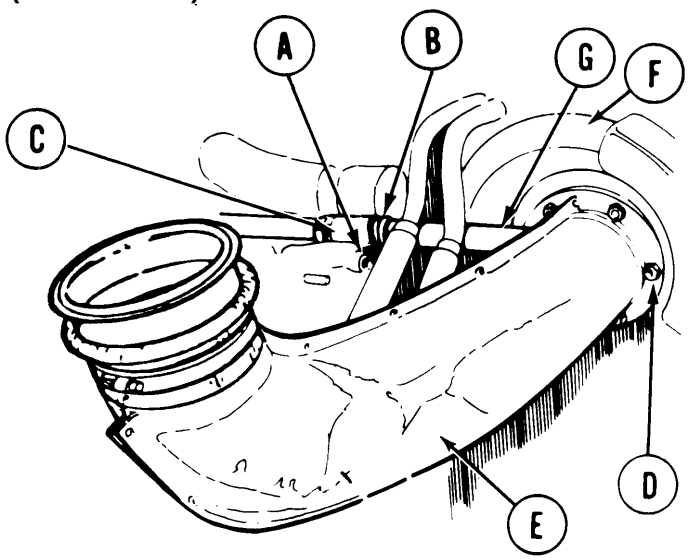

1. Using flat-tip screwdriver, loosen screw (A) holding clamp (B) onto tube (C).

2. Using socket, remove six nuts (D) holding exhaust pipe (E) to turbosupercharger housing (F).

3. Sliding exhaust pipe extension (G) out of tube (C), remove exhaust pipe (E) with insulation halves (H) and gasket (J) from turbo supercharger housing (F). Throw gasket (J) away.

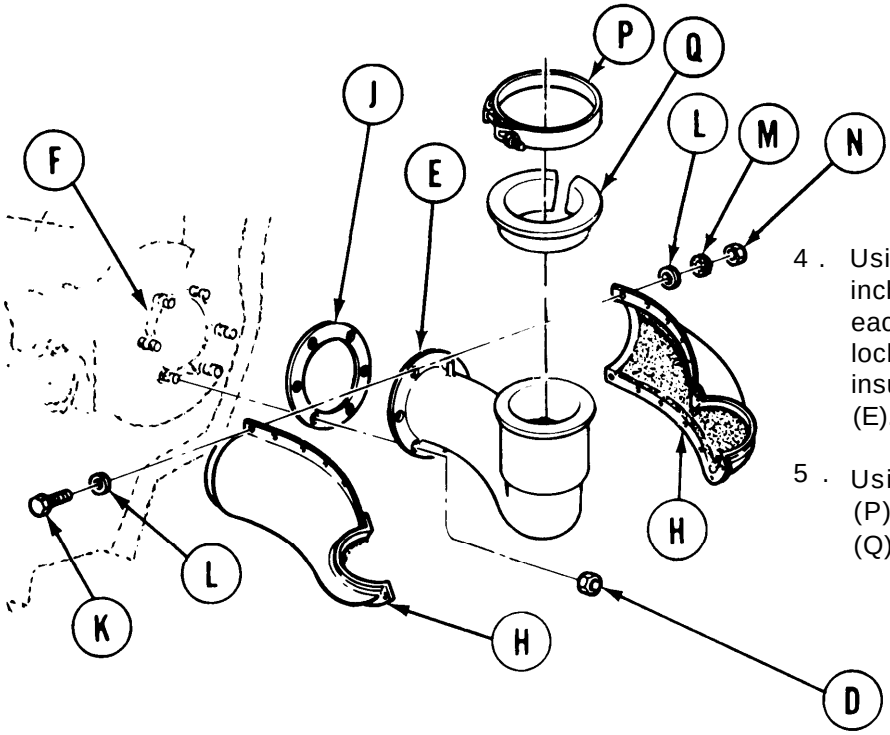

4. Using cross-tip screwdriver and 5/16 inch wrench, remove 14 screws (K), each with two flat washers (L), one lockwasher (M), and one nut (N) holding insulation halves (H) to exhaust pipe (E).

5. Using flat-tip screwdriver, remove clamp (P) from packing (Q). Remove packing (Q) from pipe (E).

6. Remove insulation halves (H) from exhaust pipe (E).

Go on to Sheet 3

TA248459

EXHAUST PIPE (LEFT SIDE) REPLACEMENT (Sheet 3 of 4)

INSULATION:

1. Position packing (A) and clamp (B) onto pipe (C) and, using flat-tip screwdriver, tighten screw on clamp (B), securing packing to pipe (C).

2. Check insulation halves (D) and all attaching hardware for damage. Replace if necessary.

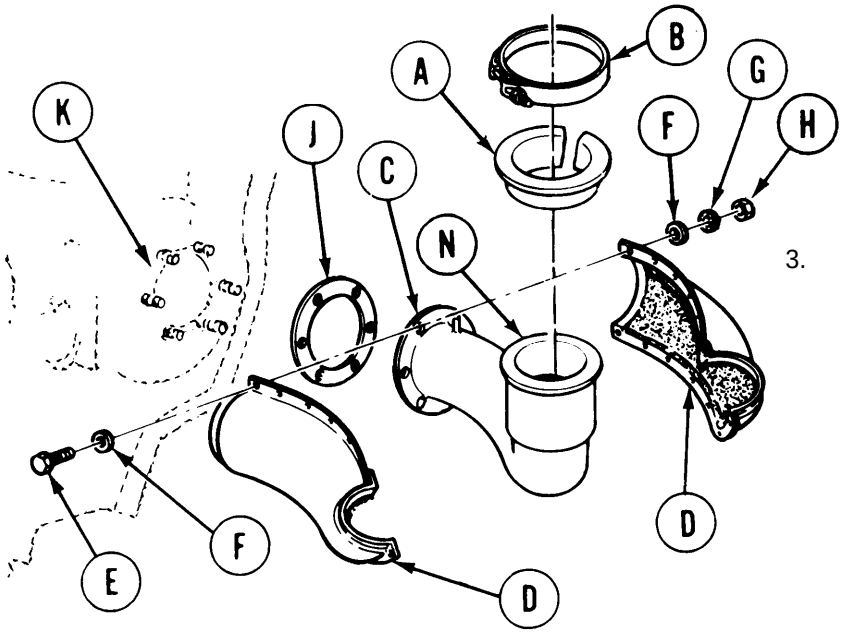

3. Position insulation halves (D) onto exhaust pipe (C).

4. Using wrench and cross-tip screwdriver, install 14 screws (E), each with two flat washers (F), one lockwasher (G), and one nut (H) to hold insulation halves (D) to exhaust pipe (C).

5. Position new gasket (J) onto turbosupercharger housing (K).

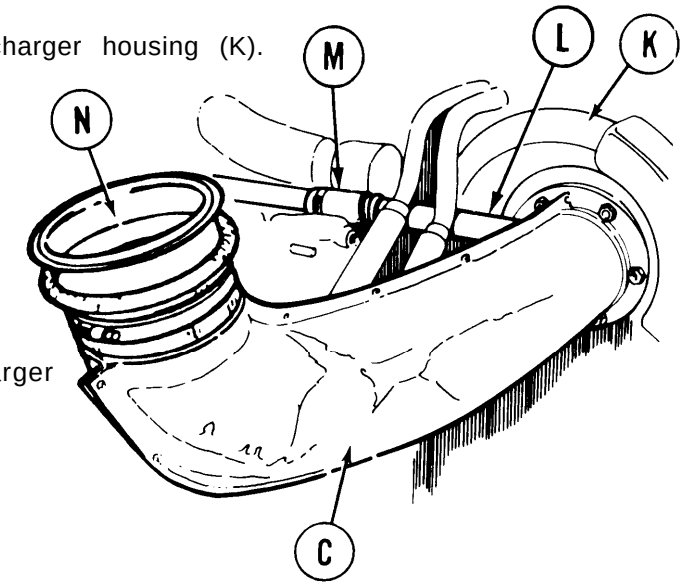

6. Slide exhaust pipe extension (L) into tube (M) as far as it will go.

7. Position exhaust pipe (C) with installed insulation halves (D) onto turbosupercharger housing (K). Make sure exhaust port (N) is pointing up.

TA248460

Go on to Sheet 4

EXHAUST PIPE (LEFT SIDE) REPLACEMENT (Sheet 4 of 4)

8. Manually start six nuts (P) to hold exhaust pipe (C) to turbosupercharger housing (K).

9. Using socket, tighten six nuts (P).

10. Using flat-tip screwdriver, tighten screw (Q) to hold clamp (R) onto tube (M).

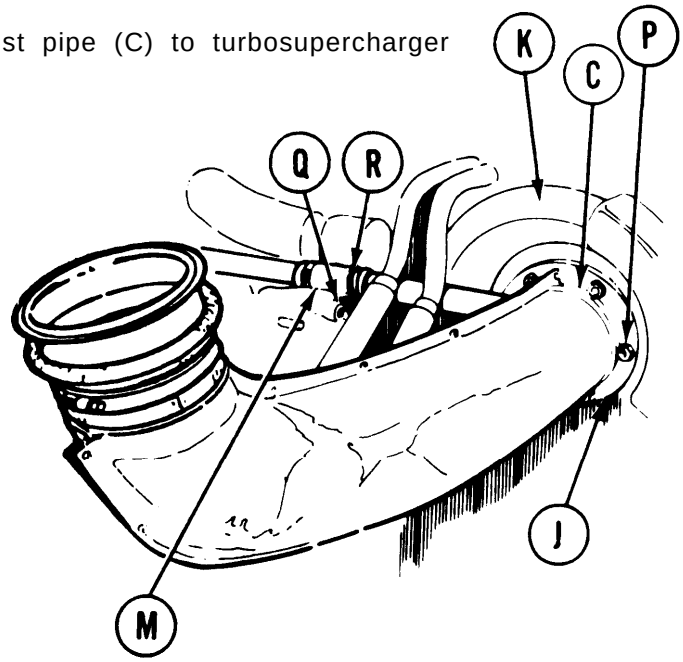

11. Start engine. Check for exhaust leaks around exhaust pipe gasket (J) and tube (M).

12. Install transmission shroud (page 9-6).

13. Close top grille doors (TM 5-5420-202-10).

End of Task

TA248461

EXHAUST PIPE (RIGHT SIDE) REPLACEMENT (Sheet 1 of 4)

PROCEDURE INDEX

PROCEDURE	PAGE
Removal	8-9
Installation	8-11

TOOLS: Ratchet with 1/2 in. drive
9/16 in. socket with 1/2 in. drive
7/8 in. open end wrench
Cross-tip screwdriver
5/16 in. combination box and. open end wrench
10 in. extension with 1/2 in. drive
Hammer
9/16 in. open end wrench
Flat-tip screwdriver
10 in. adjustable wrench

SUPPLIES: Gasket

REFERENCE: TM 5-5420-202-10

PRELIMINARY PROCEDURES: Open top deck grille doors (TM 5-5420-202-10)
Remove transmission shroud (page 9-2)

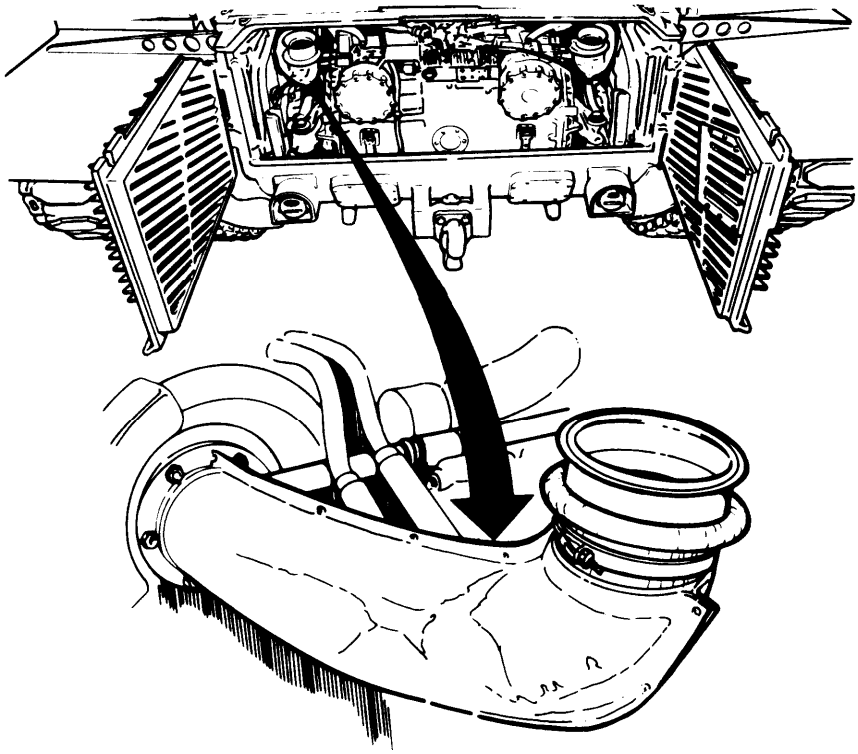

Go on to Sheet-2

TA248462

EXHAUST PIPE (RIGHT SIDE) REPLACEMENT (Sheet 2 of 4)

REMOVAL:

1. Using adjustable wrench to hold elbow (A), use 7/8 inch wrench and loosen fitting (B).

2. Using hammer, tap elbow (A) and lift tube (C) from exhaust pipe.

3. Using 9/1 6 inch socket and open end wrench, remove six nuts (D) holding exhaust pipe (E) to turbosupercharger housing (F). Remove exhaust pipe (E) with insulation halves (G) and gasket (H) from turbosupercharger housing (F). Throw gasket (H) away.

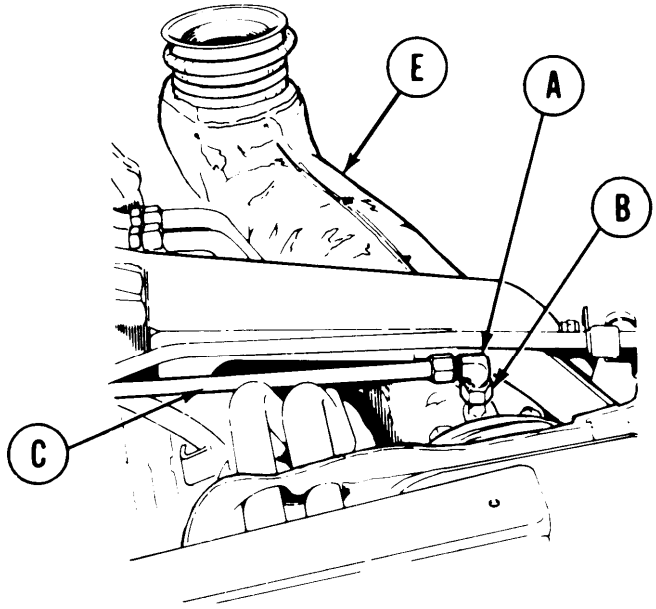

4. Using cross-tip screwdriver and 5/16 inch wrench, remove 14 screws (J), each with two flat washers (K), one lockwasher (L), and one nut (M) holding insulation halves (G) to exhaust pipe (E).

5. Using flat-tip screwdriver, remove clamp (N) from packing (P). Remove packing (P) from pipe (E).

6. Remove insulation halves (G) from exhaust pipe (E).

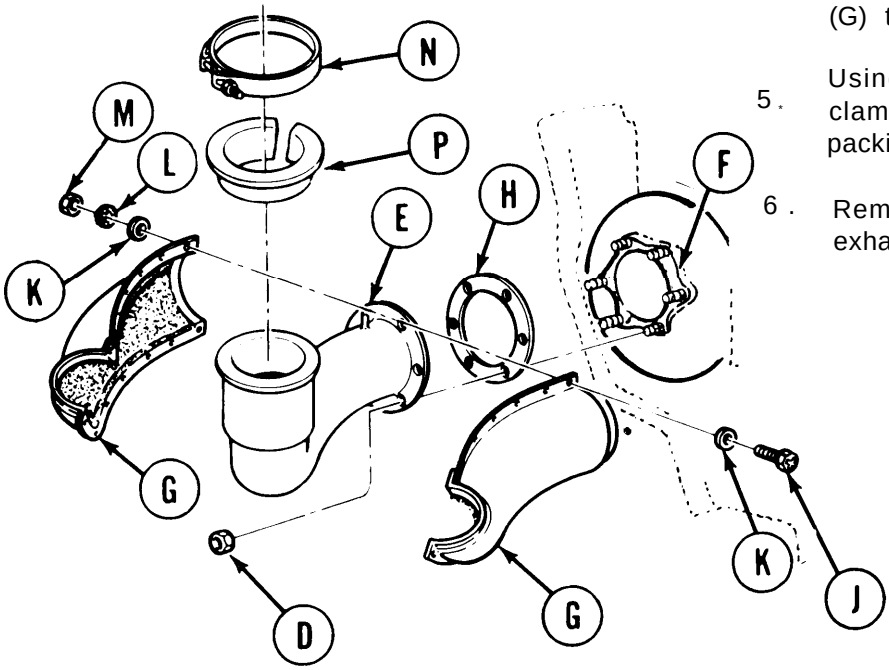

Go on to Sheet 3

TA248463

EXHAUST PIPE (RIGHT SIDE) REPLACEMENT (Sheet 3 of 4)

INSTALLATION:

1. Position packing (A) and clamp (B) onto pipe (C) and, using flat-tip screwdriver, tighten screw on clamp (B) securing packing to pipe (C).

2. Check insulation halves (D) and all attaching hardware for damage. Replace if necessary.

3. Position insulation halves (D) onto exhaust pipe (C).

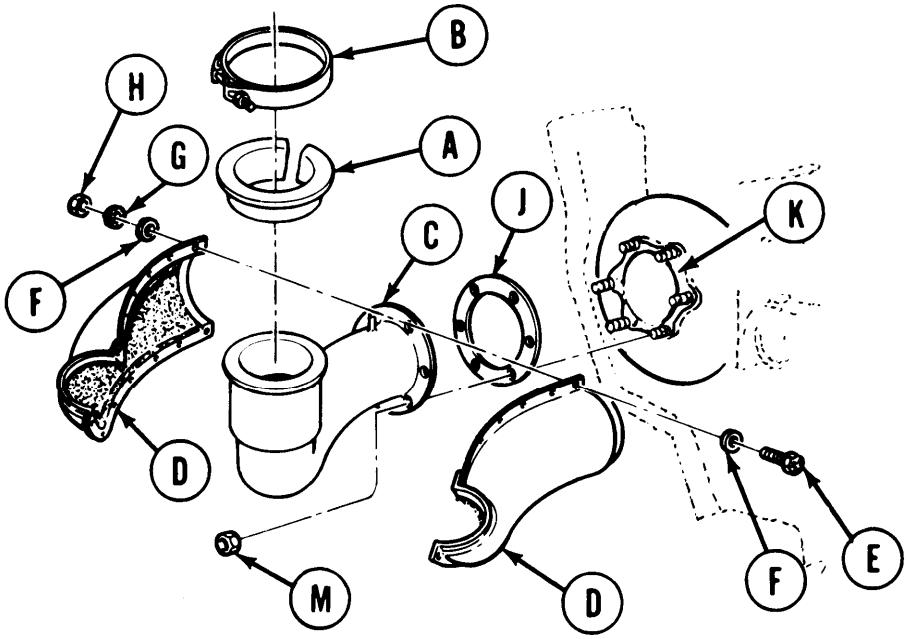

4. Using 5/16 inch wrench and cross-tip screwdriver, install 14 screws (E), each with two flat washers (F), lockwasher (G), and nut (H), to hold insulation halves (D) to exhaust pipe (C).

5. Position new gasket (J) onto turbosupercharger housing (K).

6. Position exhaust pipe (C) with installed insulation halves (D) onto turbosupercharger housing (K). Make sure exhaust port (L) is pointing up.

7. Using 9/16 inch socket and open end wrench, install six nuts (M) securing exhaust pipe to housing.

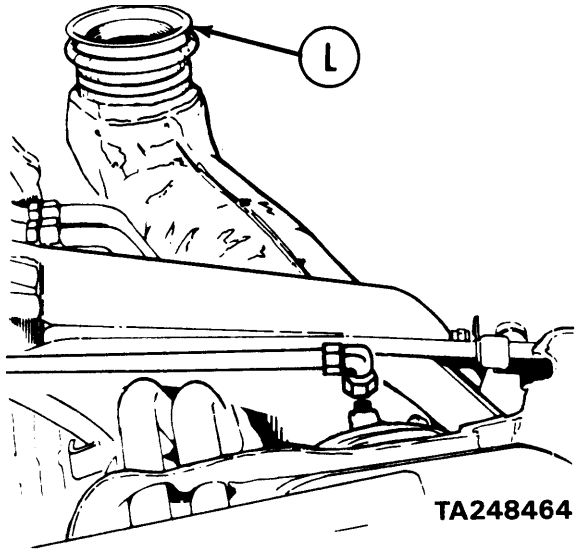

Go on to Sheet .4

EXHAUST PIPE (RIGHT SIDE) REPLACEMENT (Sheet 4 of 4)

8. Using hands, position elbow (N) into nut (P).

9. Using 7/8 inch wrench, tighten nut (P) securing tube (Q) to exhaust pipe (C).

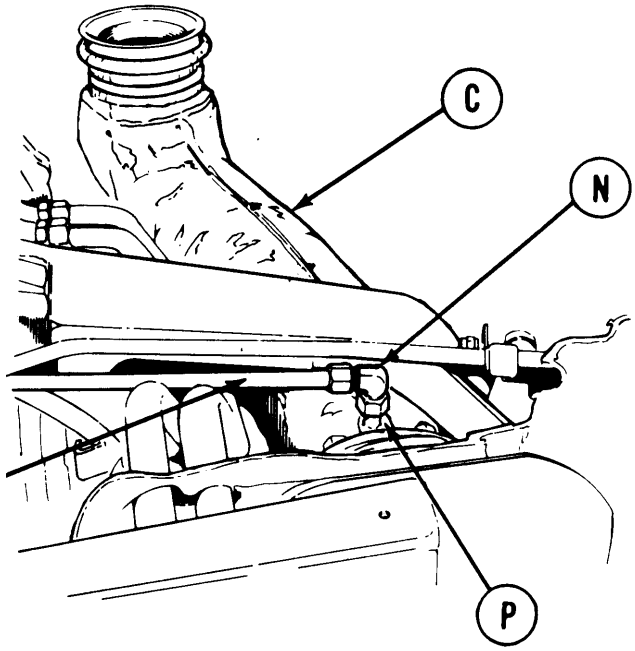

10. Start engine. Check for exhaust leaks around exhaust pipe gasket and transmission breather tube (Q) connections.

11. Install transmission shroud (page 9-6).

12. Close top deck grille doors (TM 5-5420-202-10).

End of Task

TA248465

INTAKE TUBE AND HOSES REPLACEMENT (Sheet 1 of 1)

TOOLS: 1/4 in. flat-tip screwdriver

SUPPLIES: Silicone compound (Item 32, Appendix D)

REFERENCE: TM 5-5420-202-10

PRELIMINARY PROCEDURE: Open top deck grille doors (TM 5-5420-202-10)

REMOVAL:

NOTE

Replacement of left or right intake tubes and hoses is the same.

1. Using screwdriver, loosen clamps (A) and remove tube (B) or hose (C or D) as required.

2. Remove clamps (A).

INSTALLATION:

1. Lightly coat inside ends of with silicone compound,

2. Install two clamps (A) onto

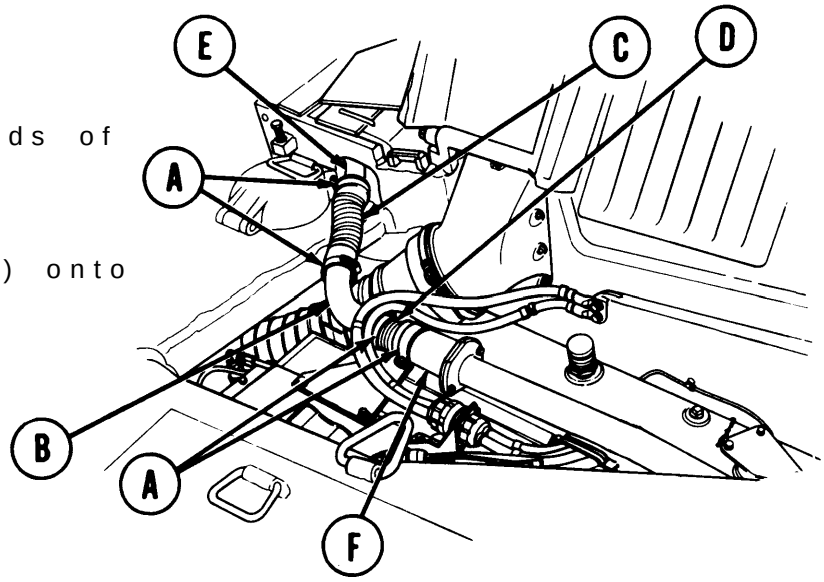

3. Install hose (C) onto manifold (E) and tube (B). Using screwdriver, tighten clamps (A).

4. Install hose (D) onto tube (B) and cap assembly (F). Using screwdriver, tighten clamps (A),

End of Task

CAP ASSEMBLY REPLACEMENT (Sheet 1 of 3)

TOOLS: 1/4 in. flat-tip screwdriver
1/2 in. combination box and open end wrench
1/2 in. socket with 1/2 in. drive
Ratchet with 1/2 in. drive
7/16 in. socket with 1/2 in. drive

SUPPLIES: Lockwasher (2 required)
Self-locking nut
Gasket
Silicone compound (Item 32, Appendix D)

REFERENCE: TM 5-5420-202-10

PRELIMINARY PROCEDURE: Open top deck grille doors (TM 5-5420-202-10)

REMOVAL:

NOTE

Replacement of left or right cap assembly is the same.

1. Using screwdriver, loosen clamps (A) and remove hoses (B) and tube (C) as a unit.

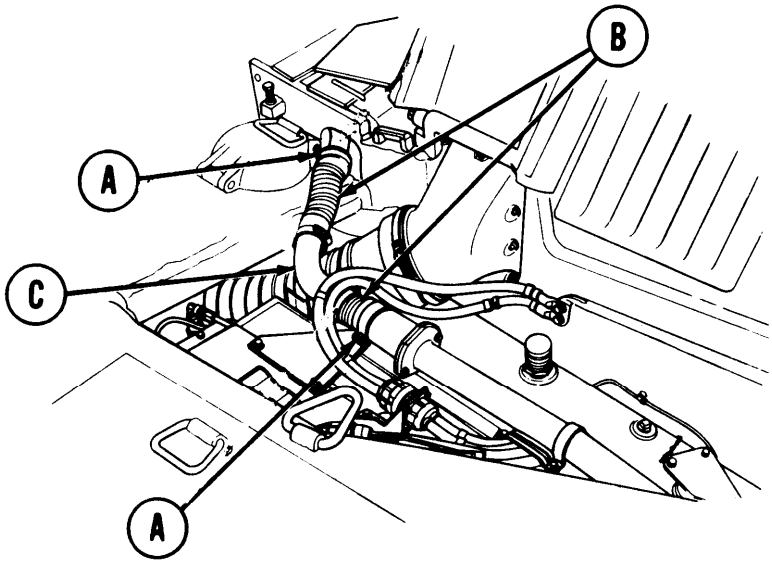

Go on to Sheet 2

CAP ASSEMBLY REPLACEMENT (Sheet 2 of 3)

2. Using wrench to hold nut (D), use 1/2 inch socket and remove screw (E) securing clamp (F). Discard nut (D).

3. Remove clamp (F) from cap assembly (G).

4. Using 7/16 inch socket, remove screw (H) and lockwasher (J) securing cap assembly (G).

5. Using 1/2 inch socket, remove screw (K) and lockwasher (L) securing cap assembly [G).

6. Remove cap assembly (G) and gasket (M). Discard gasket.

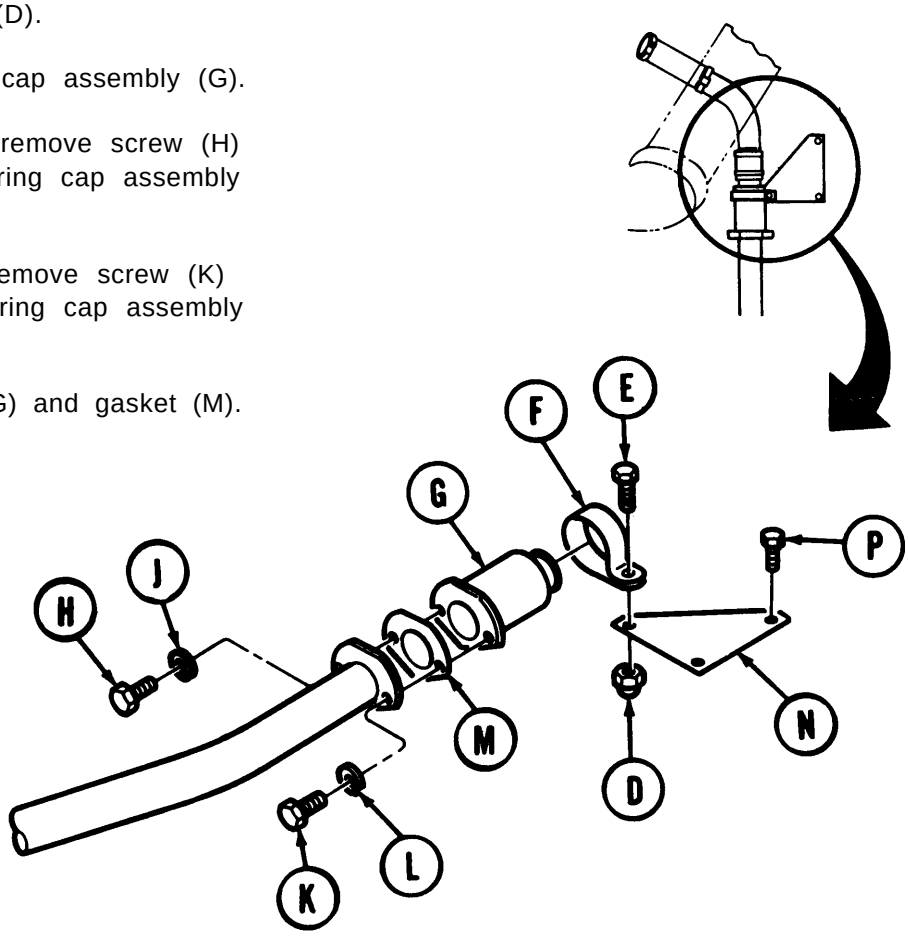

7. Inspect bracket (N) for damage. If damaged and replacement is required, using 1/2 inch socket, remove two screws (P) securing bracket and remove bracket.

Go on to Sheet 3

CAP ASSEMBLY REPLACEMENT (Sheet 3 of 3)

INSTALLATION:

1. If bracket (A) was removed, position new bracket (A) onto engine. Using 1/2 inch socket, install two screws (B) to secure bracket (A).

2. Position new gasket (C) and cap assembly (D) to intermediate tube assembly (E).

3. Using 7/16 inch socket, install screw (F) and new lockwasher (G) to secure cap assembly (D).

4. Using 1/2 inch socket, install screw (H) and new lockwasher (J) to secure cap assembly (D).

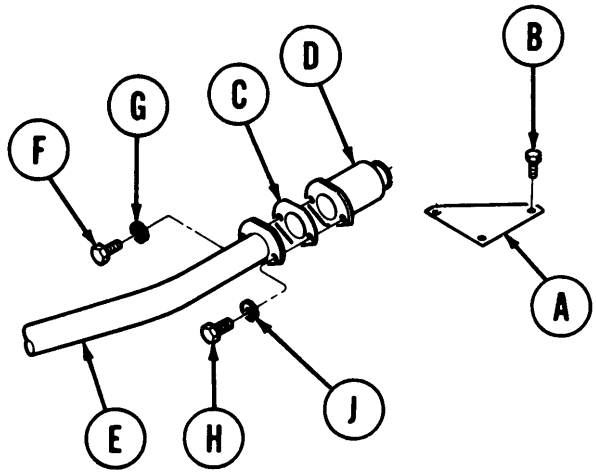

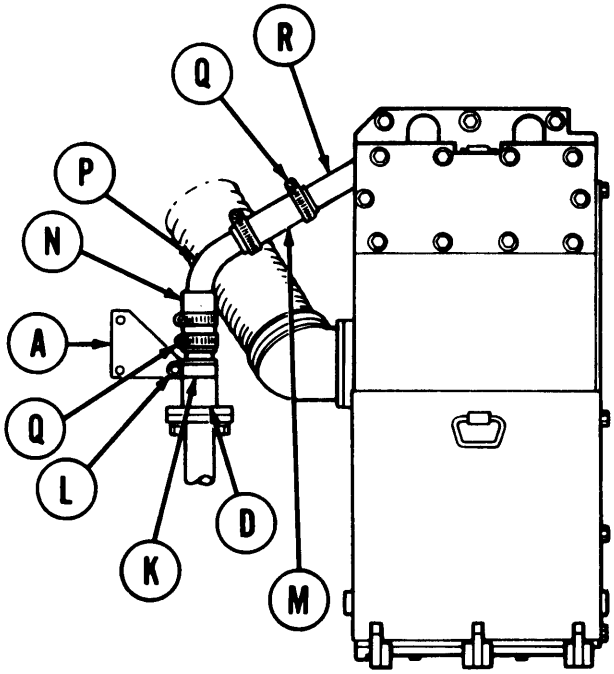

5. Install clamp (K) onto cap assembly (D).

6. Using 1/2 inch socket and wrench, install screw and new nut (L) to secure clamp (K) to bracket (A).

7. Coat ends of hoses (M and N) with silicone compound (Item 32, Appendix D).

8. Position hoses (M and N), tube (P), and clamps (Q), removed as a unit, to manifold (R) and cap assembly (D).

9. Using screwdriver, tighten clamps (Q) to secure hoses (M and N) to manifold (R) and cap assembly (D).

10. Close top deck grille doors (TM 5-5420-202-10).

End of Task

INTERMEDIATE SCAVENGER TUBE REPLACEMENT (Sheet 1 of 4)

PROCEDURE INDEX

PROCEDURE	PAGE
Removal	8-17
Installation	8-19

TOOLS: 1/4 in. flat-tip screwdriver
1/2 in. socket with 1/2 in. drive
Ratchet with 1/2 in. drive
1/2 in. combination box and open end wrench
7/16 in. socket with 1/2 in. drive
5 in. extension with 1/2 in. drive
9/16 in. socket with 1/2 in. drive
9/16 in. combination box and open end wrench

SUPPLIES:
Lockwasher (2 required)
Gasket
Self-locking nut (2 required)
Silicone compound (Item 32, Appendix D)

REFERENCE: TM 5-5420-202-10

PRELIMINARY PROCEDURE: Open top deck grille doors (TM 5-5420-202-10)

REMOVAL:

NOTE

Replacement of left or right side intermediate scavenger tube is the same.

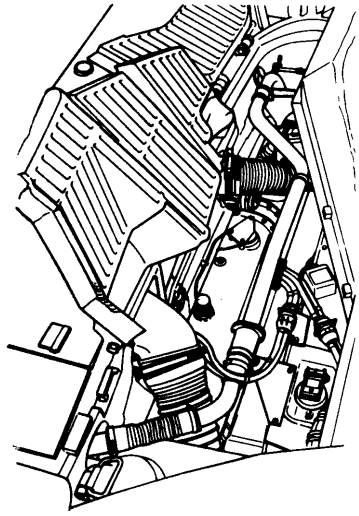

Go on to Sheet 2

INTERMEDIATE SCAVENGER TUBE REPLACEMENT (Sheet 2 of 4)

1. Using 7/16 inch socket, remove screw (A) and lockwasher (B) securing intermediate scavenger tube (C) to cap assembly (D).

2. Using 1/2 inch socket, remove screw (E) and lockwasher (F) securing intermediate scavenger tube (C) to cap assembly (D).

3. Using 1/2 inch wrench to hold self-locking nut (G), use 1/2 inch socket and remove screw (H) securing clamp (J) to bracket (K).

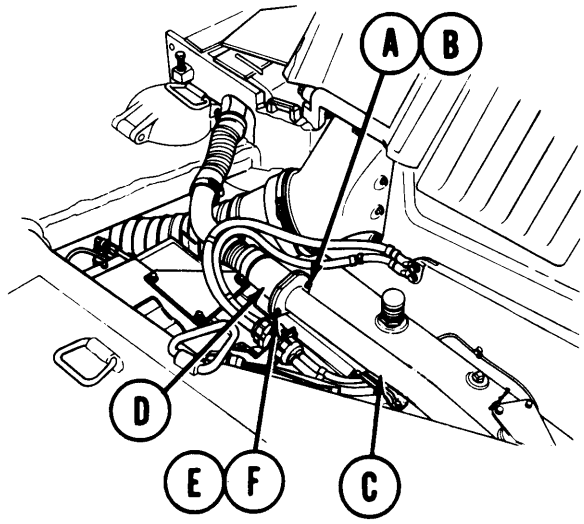

4. Using 1/2 inch wrench to hold self-locking nut (L), use 1/2 inch socket and remove screw (M) securing clamp (N).

5. Using screwdriver, loosen clamp (P) securing intermediate scavenger tube (C) and hose (Q).

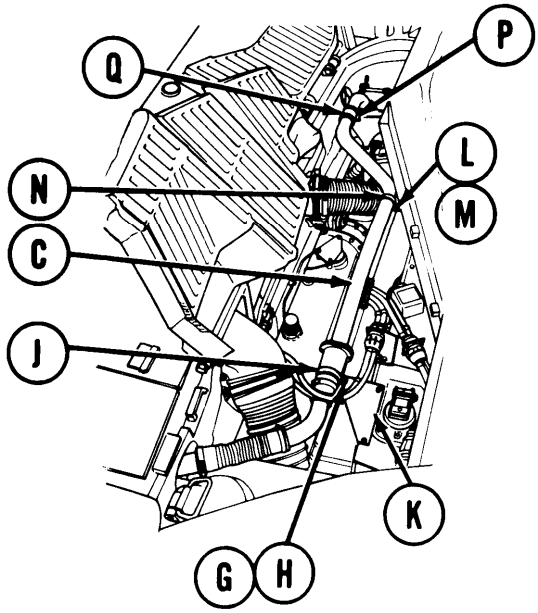

Go on to Sheet 3

INTERMEDIATE SCAVENGER TUBE REPLACEMENT (Sheet 3 of 4)

6. Use twisting motion and separate intermediate scavenger tube (C) from cap assembly (D) and hose (Q).

7. Remove and throw away gasket (R) from between intermediate scavenger tube (C) and cap assembly (D).

8. Inspect hose (Q) for cracks and defects. Replace as required.

9. Remove clamp (N) from intermediate scavenger tube (C) and inspect for defects. Replace clamp as required.

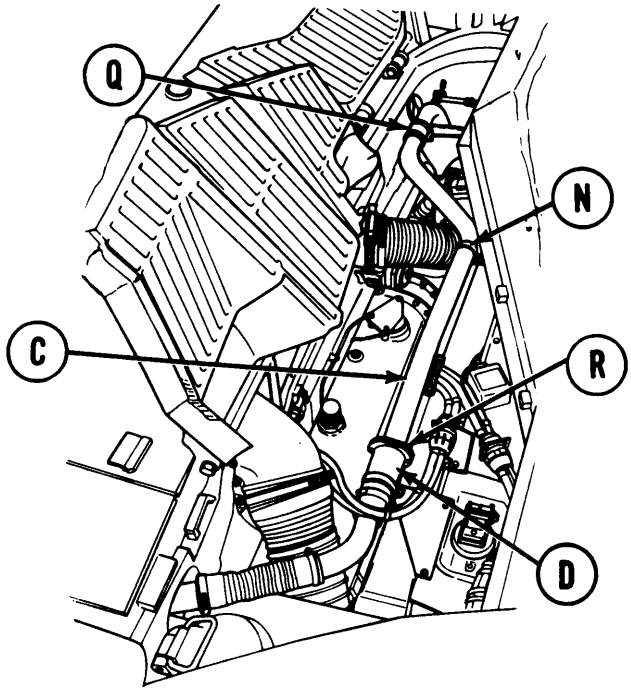

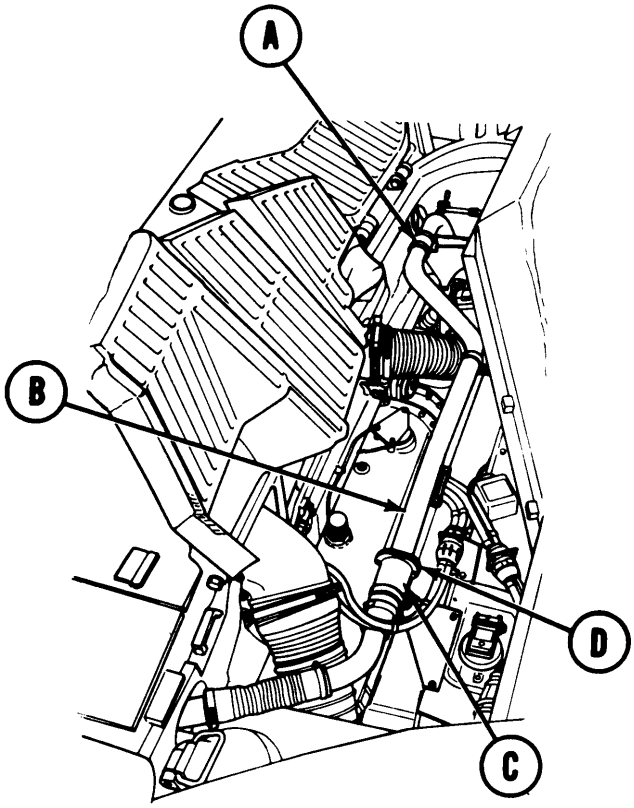

INSTALLATION:

1. Apply coat of silicone compound to inside of hose (A).

2. Position and install end of intermediate scavenger tube (B) into hose (A) and to cap assembly (C).

3. Insert new gasket (D) between flange of intermediate scavenger tube (B) and cap assembly (C).

Go on to Sheet 4

INTERMEDIATE SCAVENGER TUBE REPLACEMENT (Sheet 4 of 4)

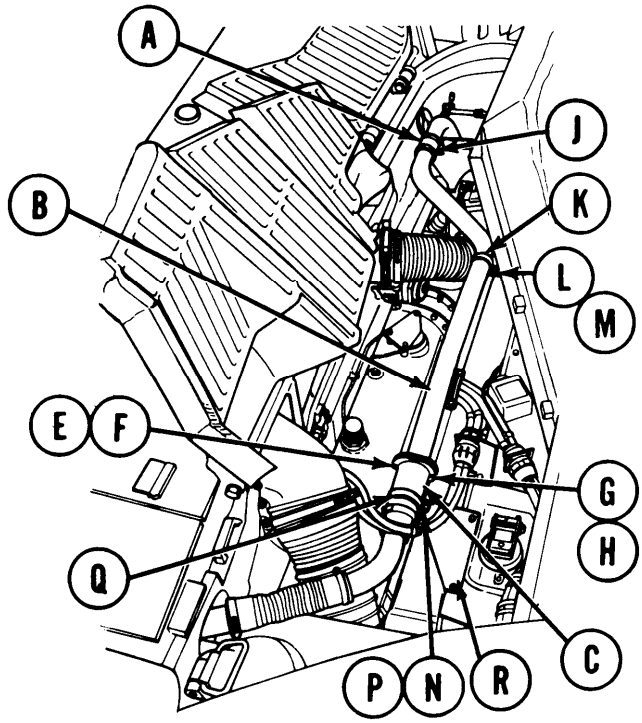

4. Install screw (E) and new lockwasher (F) to secure intermediate scavenger tube (B) to cap assembly (C).

5. Install screw (G) and new lockwasher (H) to secure intermediate scavenger tube (B) to cap assembly (C).

6. Using 7/16 inch socket, tighten screw (E). Using 1/2 inch socket, tighten screw (G).

7. Position clamp (J) over hose (A) and intermediate scavenger tube (B). Using screwdriver, tighten clamp (J).

8. Install clamp (K) into intermediate scavenger tube (B).

9. Using 1/2 inch socket and 1/2 inch wrench, install screw (L) and new self-locking nut (M) to secure clamp (K) to bracket.

10. Using 1/2 inch socket and 1/2 inch wrench, install screw (N) and new self-locking nut (P) to secure clamp (Q) to bracket (R).

11. Close top deck grille doors (TM 5-5420-202-10).

End of Task

LEFT EXHAUST EJECTOR TUBE REPLACEMENT (Sheet 1 of 4)

PROCEDURE INDEX

PROCEDURE	PAGE
Removal	8-21
Installation	8-23

TOOLS: No. 1 cross-tip screwdriver
9/16 in. open end wrench
5/16 in. combination box and open end wrench
1/2 in. combination box and open end wrench (two required)
Screwdriver, flat-tip, 1/4 in.

SUPPLIES: Lockwasher (11 required)
Gasket
Self-locking nut (7 required)
Silicone compound (Item 32, Appendix D)

PRELIMINARY PROCEDURE: Remove powerplant (page 5-2)

REMOVAL:

1. Using flat-tip screwdriver, loosen two clamps (A).

2. Using two 1/2 inch wrenches, hold nut (B) and remove screw (C) securing clamp (D) to left ejector tube bracket (E).

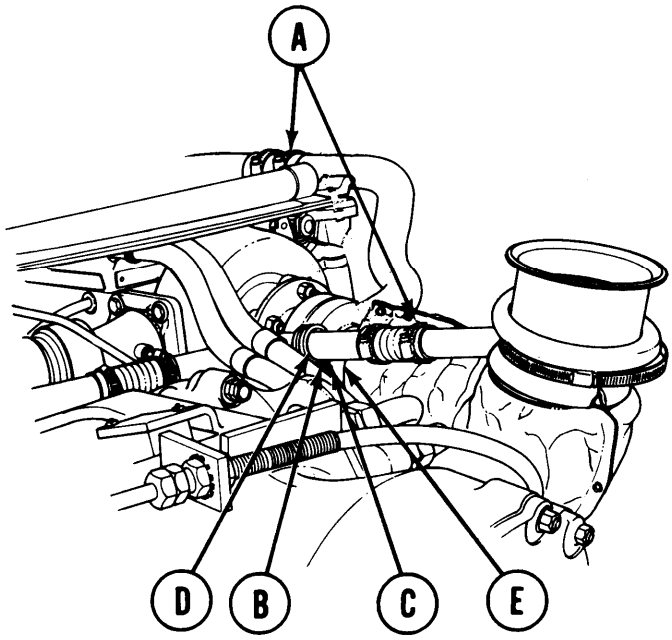

ENGINE LEFT BANK

Go on to Sheet 2

LEFT EXHAUST EJECTOR TUBE REPLACEMENT (Sheet 2 of 4)

3. Using 9/16 inch wrench, remove and discard six self-locking nuts (F) securing ejector tube (G) to turbosupercharger.

4. Remove ejector tube (G) and gasket (H). Discard gasket.

5. Using flat-tip screwdriver, remove clamp (J) and packing (K) from ejector tube (G).

6. Using cross-tip screwdriver and 5/16 inch wrench, remove 11 screws (L), 22 flat washers (M), 11 lockwashers (N), and 11 nuts (P).

7. Remove insulation (Q and R) from ejector tube (G).

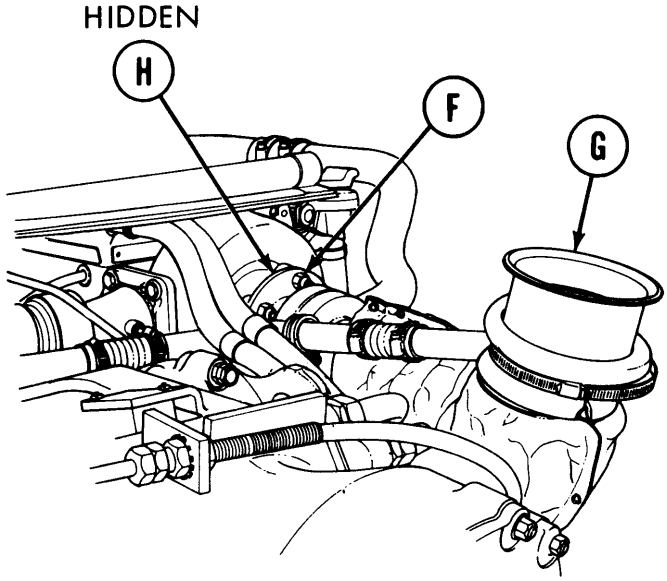

ENGINE LEFT BANK

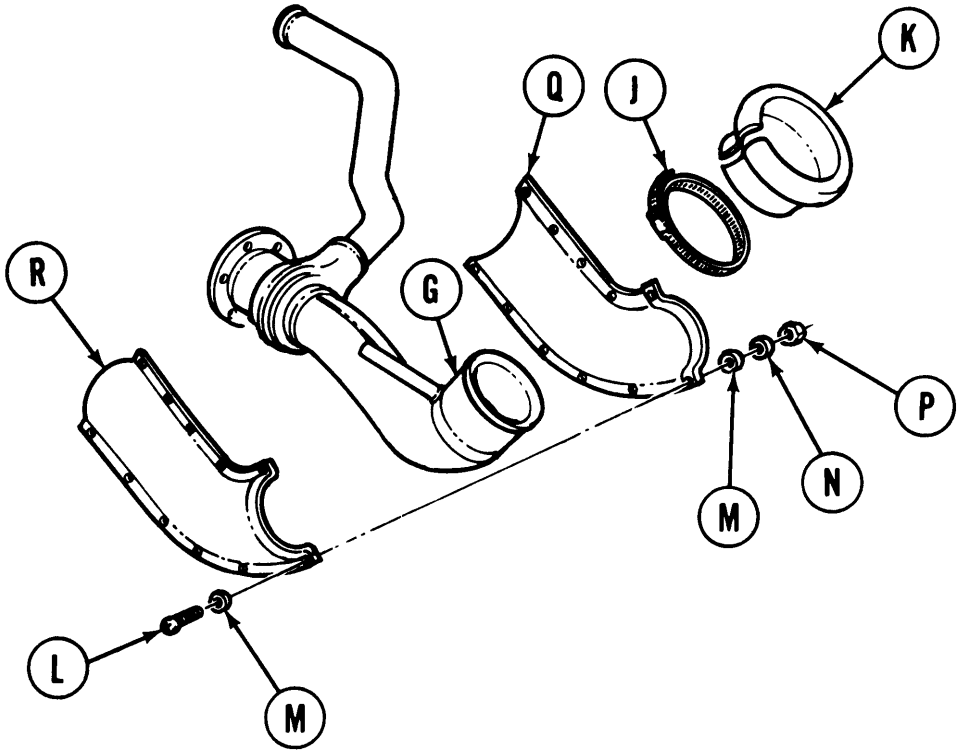

Go on to Sheet 3

LEFT EXHAUST EJECKTOR TUBE REPLACEMENT (Sheet 3 of 4)

INSTALLATION:

1. Position insulation (A and B) to ejector tube (C).

2. Using cross-tip screwdriver and 5/16 inch wrench, install 11 screws (D), 22 flat washers (E), 11 new lockwashers (F), and 11 nuts (G) to secure insulation (A and B) to ejector tube (C).

3. Position packing (H) and clamp (J) onto ejector tube (C). Use flat-tip screwdriver to tighten clamp (J).

4. Apply a light coat of silicone compound to end of two hoses(K).

5. Position left exhaust ejector tube (C) and new gasket (L) onto studs of turbosupercharger housing (M).

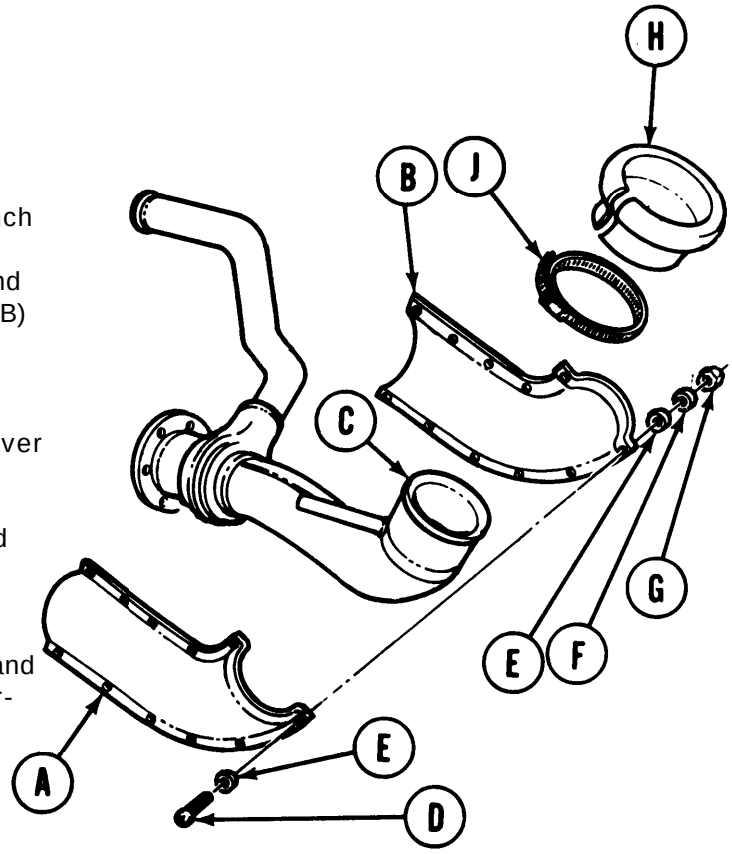

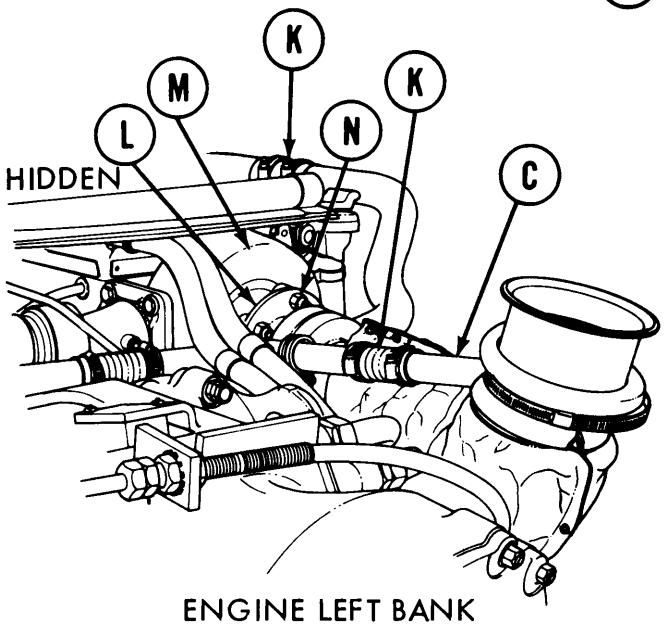

6. Using 9/16 inch wrench, install six new self-locking nuts (N) to secure left exhaust ejector tube (C) to turbosupercharger housing (M).

Go on to Sheet 4

LEFT EXHAUST EJECTOR TUBE REPLACEMENT (Sheet 4 of 4)

7. Position two hoses (K) onto left exhaust ejector tube (C) and, using flat-tip screwdriver, tighten two clamps (P).

8. Using two 1/2 inch wrenches, install new self-locking nut (Q) and screw (R) to secure clamp (S) to bracket on ejector tube (C).

9. Install powerplant (page 5-2).

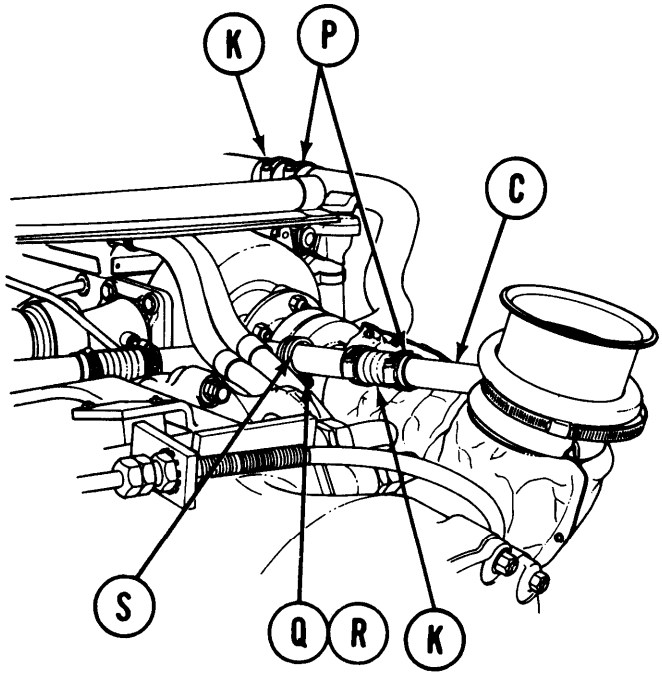

End of Task

RIGHT EXHAUST EJECTOR TUBE REPLACEMENT (Sheet 1 of 4)

PROCEDURE INDEX

PROCEDURE	PAGE
Removal	8-25
Installation	8-27

TOOLS: 10 in. adjustable wrench
No. 1 cross-tip screwdriver
9/16 in. open end wrench
7/8 in. combination box and open end wrench
5/16 in. combination box and open end wrench
Screwdriver, flat-tip, 1/4 in.

SUPPLIES: Lockwasher (11 required)
Gasket
Self-locking nut (6 required)
Silicone compound (Item 32, Appendix D)

PRELIMINARY PROCEDURE: Remove powerplant (page 5-2)

REMOVAL:

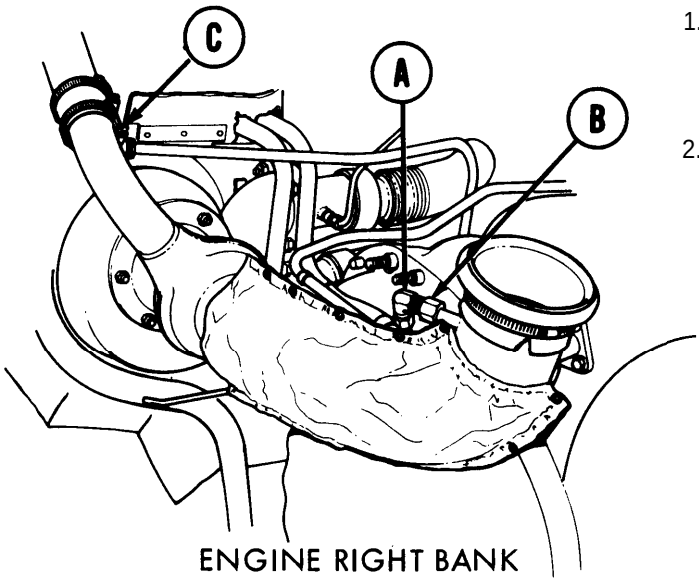

1. Using adjustable wrench to hold elbow (A) and using 7/8 inch wrench, disconnect nut (B) from elbow (A).

2. Using flat-tip screwdriver, loosen clamp (C).

Go on to Sheet 2

RIGHT EXHAUST EJECTOR TUBE REPLACEMENT (Sheet 2 of 4)

3. Using 9/1 6 inch wrench, remove and discard six self-locking nuts (D) securing ejector tube (E) to the turbosupercharger.

4. Remove ejector tube (E) and gasket (F). Discard gasket.

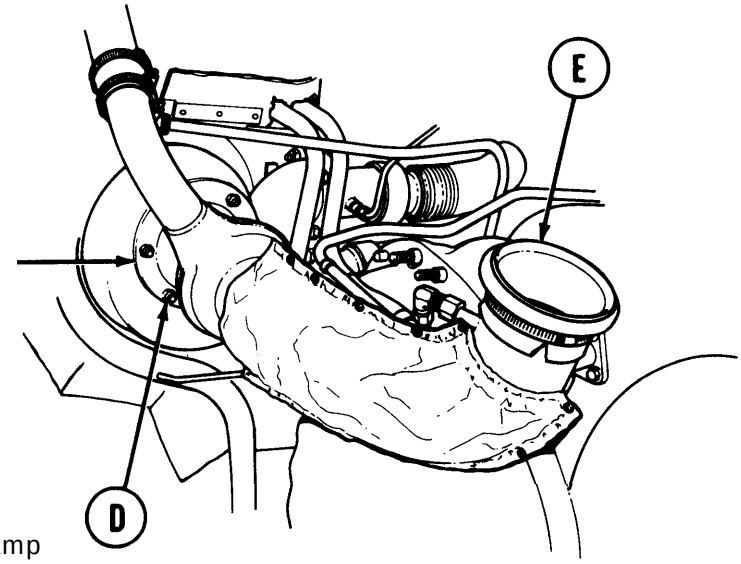

ENGINE RIGHT BANK

5. Using flat-tip screwdriver, remove clamp (G) and packing (H) from ejector tube (E).

6. Using cross-tip screwdriver and 5/16 inch wrench, remove 11 screws (J), 22 flat washers (K), 11 lockwashers (L), and 11 nuts (M).

7. Remove insulation (N and P) from ejector tube (E).

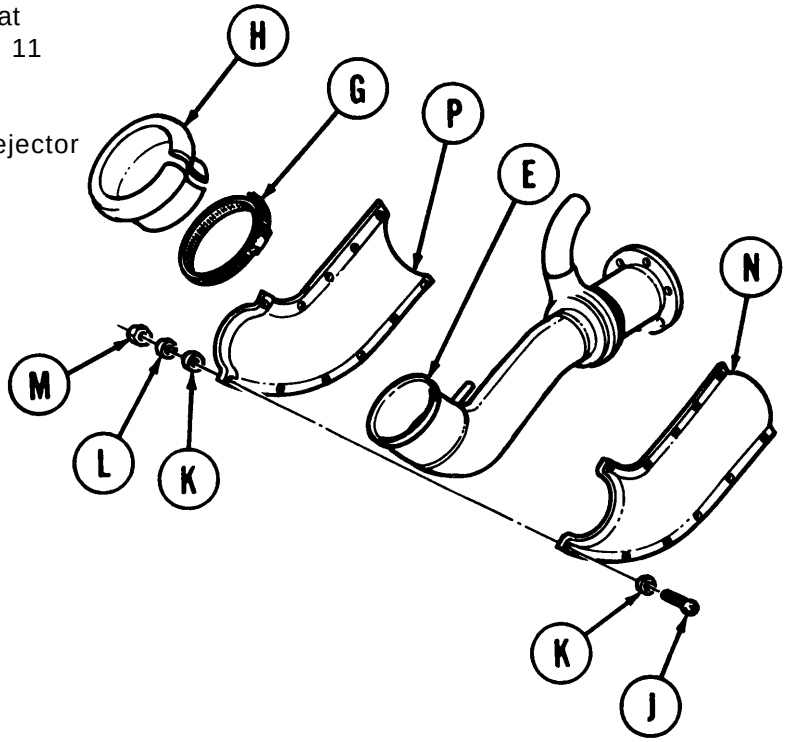

TYPICAL ENGINE RIGHT BANK SHOWN

Go on to Sheet 3

RIGHT EXHAUST EJECTOR TUBE REPLACEMENT (Sheet 3 of 4)

INSTALLATION:

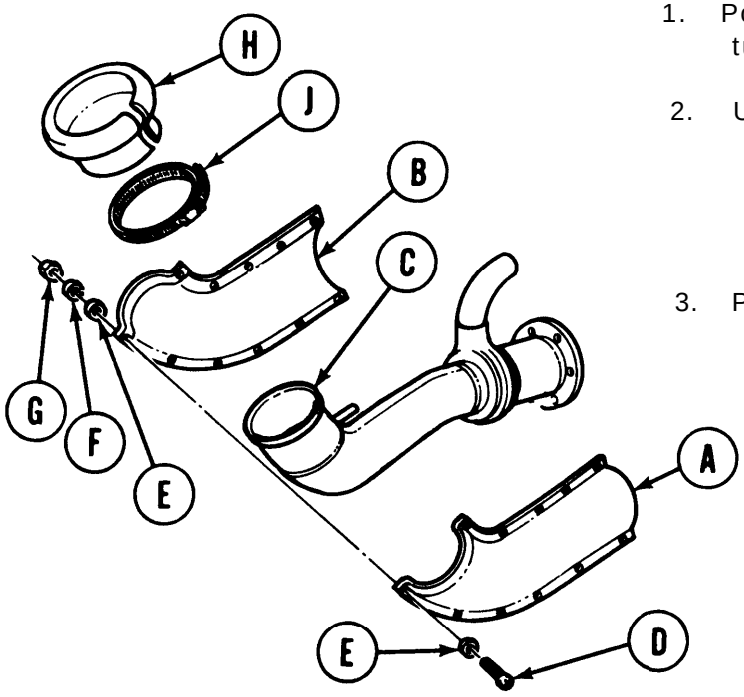

1. Position insulation (A and B) to ejector tube (C).

2. Using cross-tip screwdriver and 5/16 inch wrench, install 11 screws (D), 22 flat washers (E), 11 new lockwashers (F), and 11 nuts (G) to secure insulators (A and B) to ejector tube (C).

3. Position packing (H) and clamp (J) onto ejector tube (C). Use flat-tip screwdriver to tighten clamp (J).

4. Apply coating of silicone compound to end of hose (K).

5. Position right exhaust ejector tube (C) and new gasket (L) onto studs of turbosupercharger (M) and hose (K).

6. Using 9/16 inch wrench, install six new self-locking nuts (N) to secure right exhaust ejector tube (C) to turbosupercharger (M).

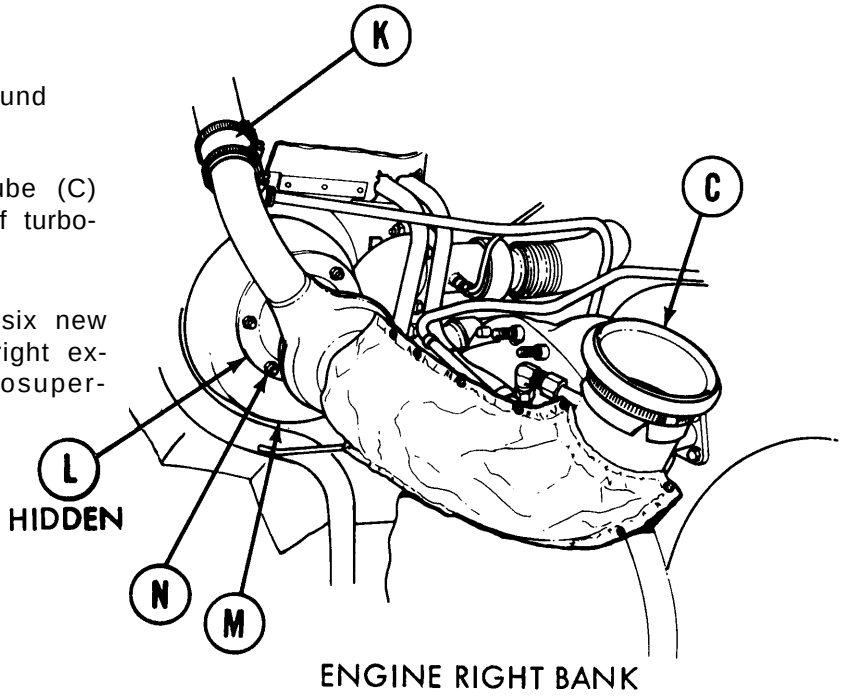

Go on to Sheet 4

RIGHT EXHAUST EJECTOR TUBE REPLACEMENT (Sheet 4 of 4)

7. Using flat-tip screwdriver, tighten clamp (P).

8. Using adjust able wrench to hold elbow (Q), use 7/8 inch wrench to connect nut (R) to elbow (Q).

9. Install powerplant (page 5-2).

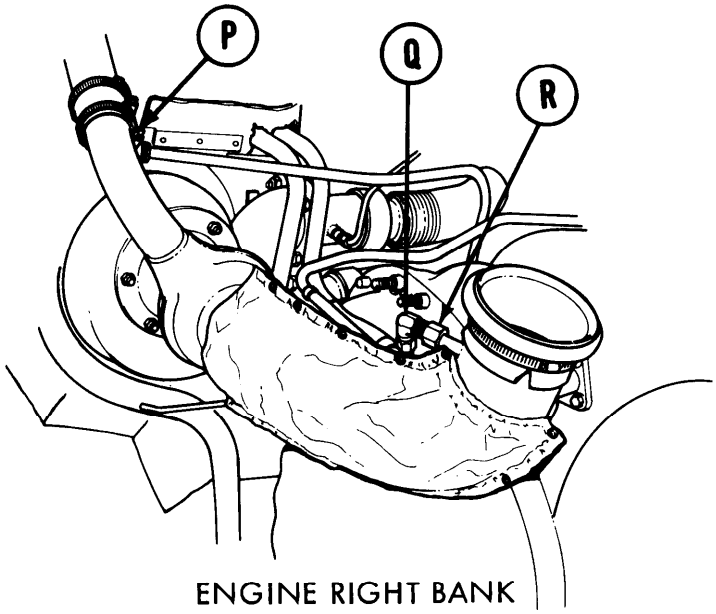

End of Task

CHAPTER 9

COOLING SYSTEM MAINTENANCE

INDEX

Procedure	Page
Transmission Shroud Replacement	9-2
Transmission Shroud Repair	9-9
Transmission Shroud Supports (Left or Right) Replacement	9-15
Transmission Shroud Support Repair	9-16
Transmission Shrouds Replacement	9-22
Right Intermediate Shroud Replacement	9-22
Lower Shroud Replacement	9-27
Left Intermediate Shroud Replacement	9-29
Engine Shroud Replacement	9-30
Engine Shroud Repair Off Engine	9-32
Engine Shroud Repair On The Engine	9-34
Engine Shroud Support Replacement	9-39
Turbocharger Shrouds Replacement	9-41
Inner Shroud Replacement	9-41
Outer Shroud Replacement	9-45
Upper Shroud Replacement	9-46
Cooling Fan Shroud Replacement	9-47
Engine Cooling Fan Replacement	9-55
Fan Drive Oil Seal Replacement	9-59
Centrifugal Fan Housing Replacement	9-64

TRANSMISSION SHROUD REPLACEMENT (Sheet 1 of 7)

PROCEDURE INDEX

PROCEDURE	PAGE
Removal	9-2
Installation	9-6

TOOLS: Ratchet with 1/2 in. drive
3/4 in. socket with 1/2 in. drive
1-1/8 in. socket with 1/2 in. drive
7/16 in. open end wrench
Heat protective mittens

SUPPLIES: Plastic covers for exhaust (2 required)

PERSONNEL: Two

WARNING

Allow engine to cool one hour before removing shroud. Wear heat protective mittens for protection.

Go on to Sheet 2

TA248466

TRANSMISSION SHROUD REPLACEMENT (Sheet 2 of 7)

NOTE

Remove bolts from the right exhaust door first. Then remove the bolts from the left door.

REMOVAL:

1. Using 1-1/8 inch socket, remove four bolts (A) securing exhaust doors to hull.

2. Open both exhaust doors.

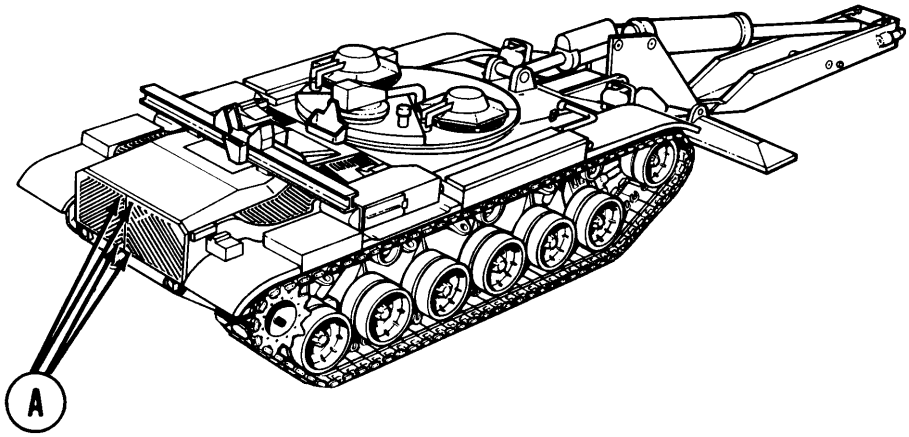

3. Using open end wrench, loosen clamp assembly (B) securing exhaust elbow assembly (C) to exhaust pipe (both sides of vehicle). Unlock clamp assembly (B).

4. Remove elbow assembly (C) from exhaust pipe (both sides of vehicle).

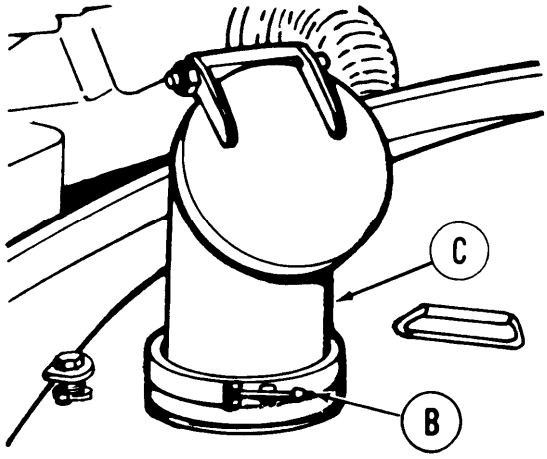

Go on to Sheet 3

TA248467

TRANSMISSION SHROUD REPLACEMENT (Sheet 3 of 7)

5. Install plastic covers (D) over exhausts.

NOTE

Narrow end of turnlock fasteners (E) must be rotated 180° from their original position so they point inside engine compartment.

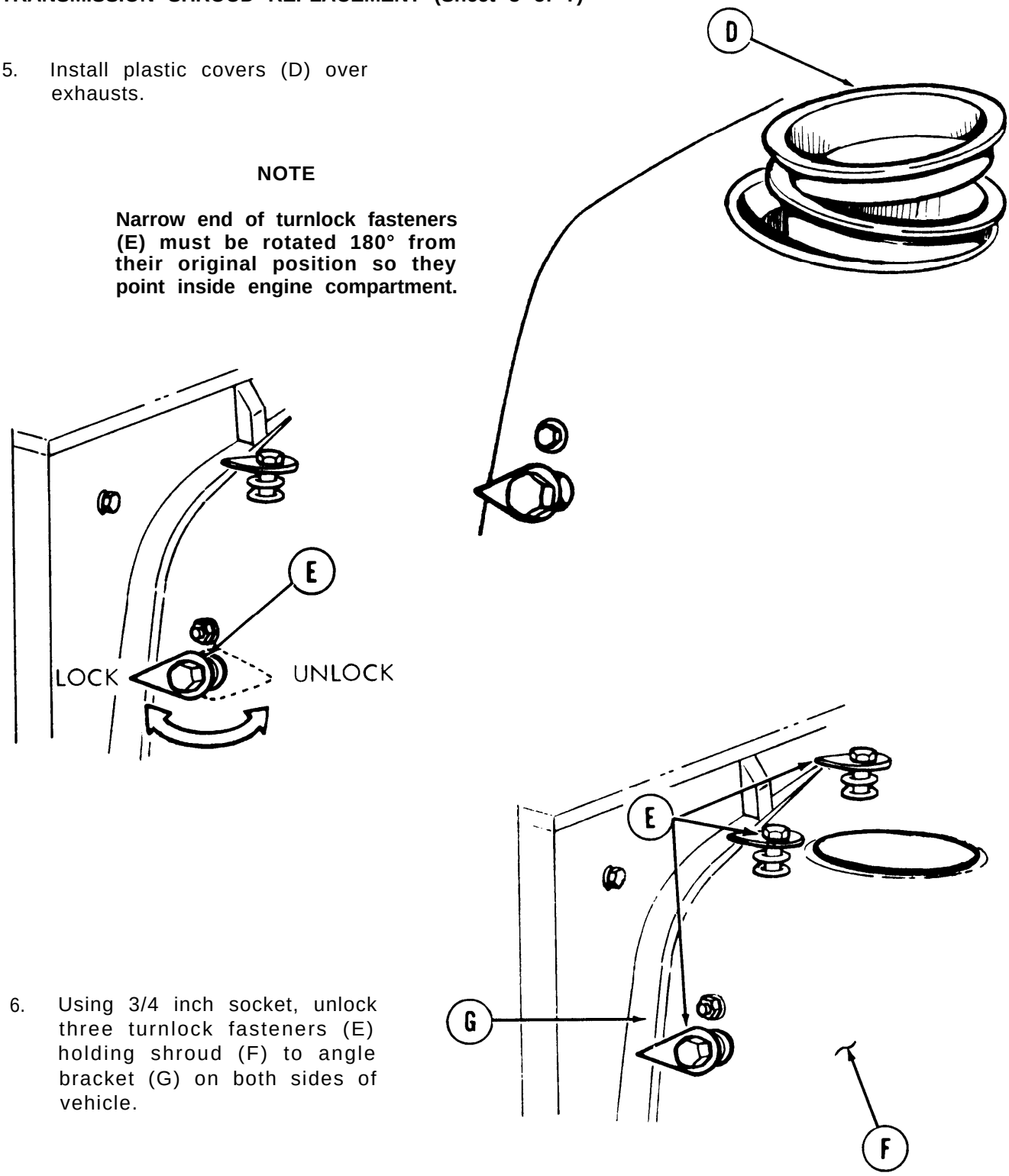

6. Using 3/4 inch socket, unlock three turnlock fasteners (E) holding shroud (F) to angle bracket (G) on both sides of vehicle.

TA248468

Go on to Sheet 4

TRANSMISSION SHROUD REPLACEMENT (Sheet 4 of 7)

7. With the help of second technician grasp handles (H) and lift shroud up (to clear exhaust pipe) and out.

CAUTION

Remove shroud carefully to avoid damage to shroud seal (J).

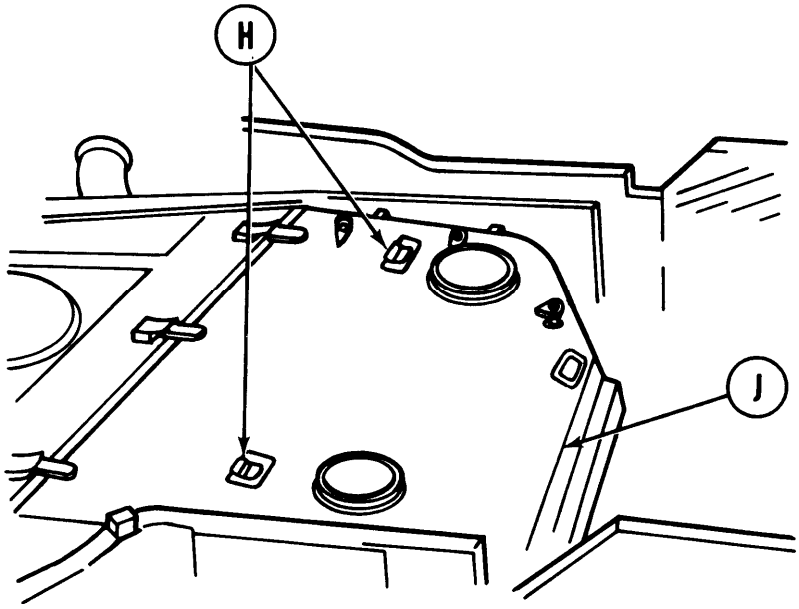

Go on to Sheet 5

TA248469

TRANSMISSION SHROUD Replacement (Sheet 5 of 7)

INSTALLATION:

CAUTION

Position shroud carefully onto vehicle to avoid damage to shroud seal (B).

1. Both technicians grasp handles (A) of transmission shroud and lift shroud into position on vehicle.

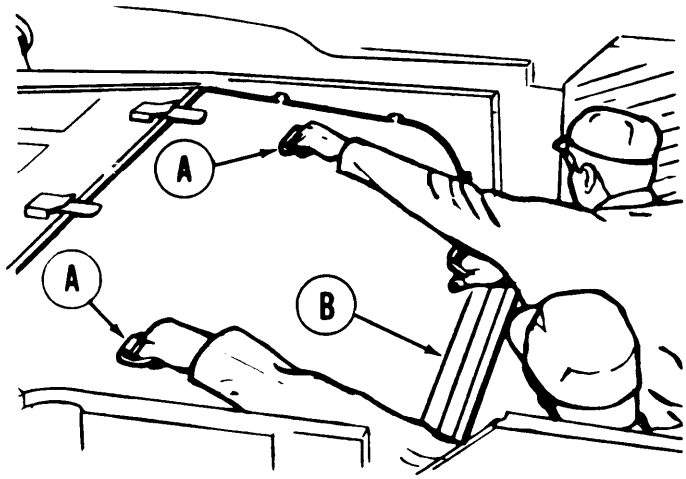

NOTE

Narrow end of turnlock fasteners must be rotated 180° to lock.

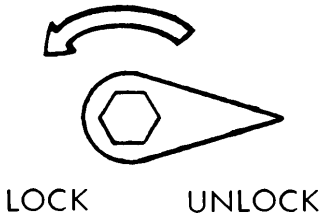

2. Using 3/4 inch socket, lock three turnlock fasteners (C) on each side of vehicle.

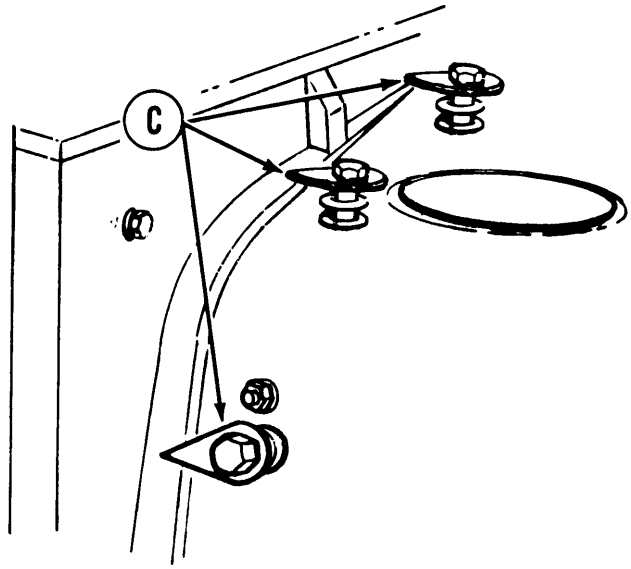

TA248470

Go on to Sheet 6

TRANSMISSION SHROUD REPLACEMENT (Sheet 6 of 7)

3. Remove plastic cover (D) from exhaust.

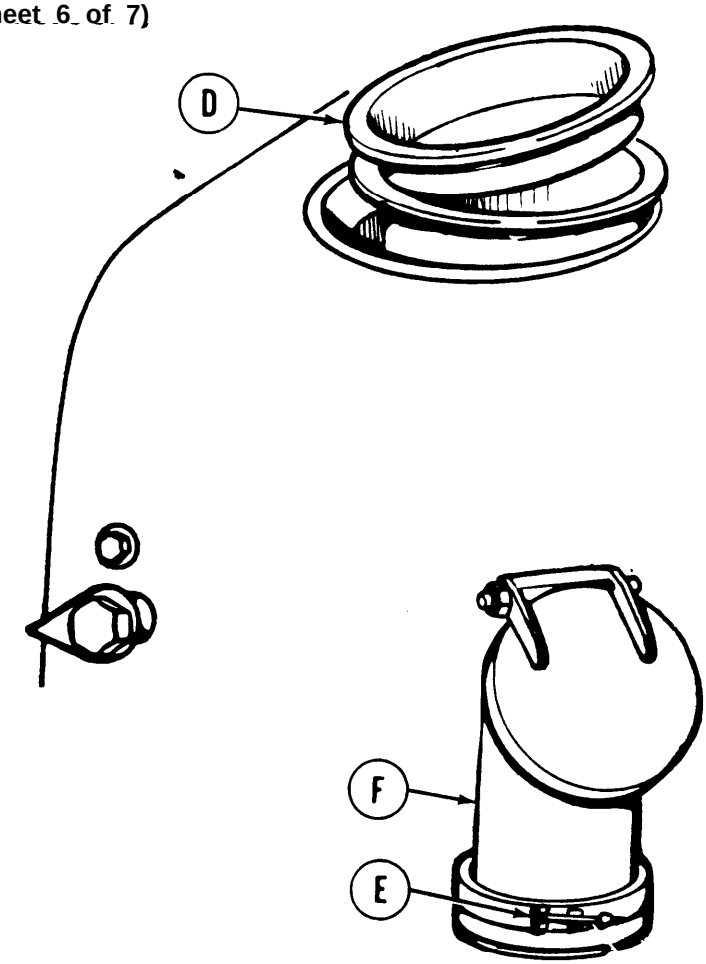

4. Position clamp assembly .(E) over exhaust elbow assembly (F).

5. Position exhaust elbow assembly (F) over notch in exhaust pipe (both sides of vehicle). Cap assemblies (G) on outlets (F) will face rear and inward at rear of vehicle. Lock clamp assembly (E).

6. Using wrench, tighten clamp assembly (E).

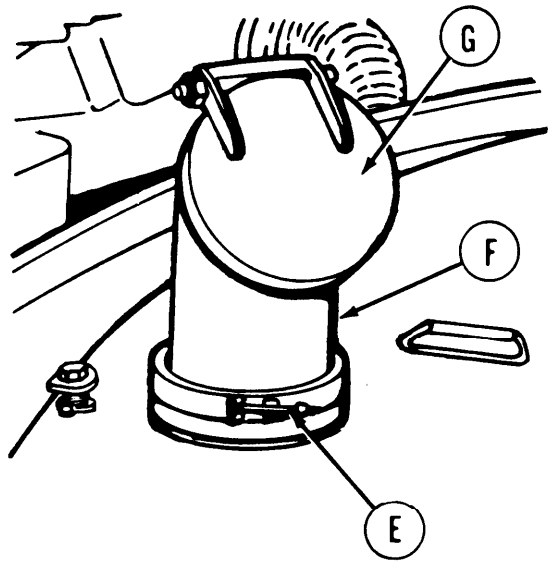

TA24847

Go on to Sheet 7

TRANSMISSION SHROUD REPLACEMENT (Sheet 7 of 7)

7. Close engine exhaust doors (H).

8. Using 1-1/8 inch socket, install and tighten four bolts (J).

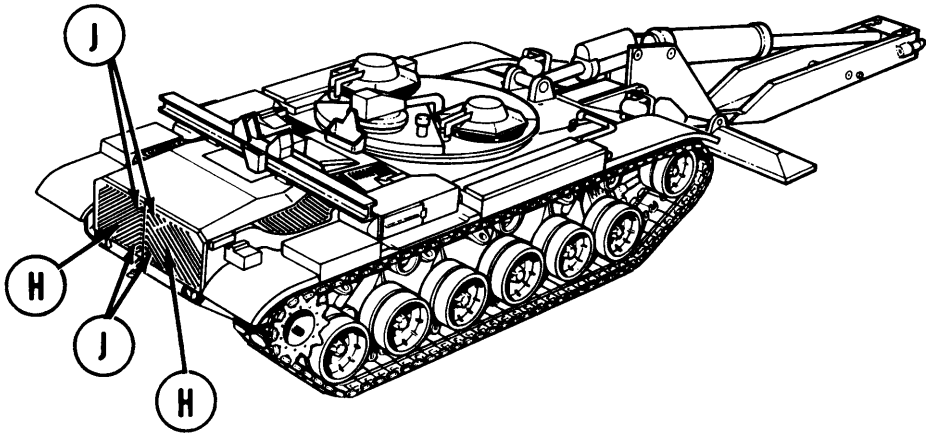

End of Task

TA248472

TRANSMISSION SHROUD REPAIR (Sheet 1 of 6)

PROCEDURE INDEX

PROCEDURE	PAGE
Disassembly	9-9
Cleaning and Inspection	9-12
Assembly	9-13

TOOLS: 7/1 6 in. combination wrench
Diagonal cutting pliers
Ratchet with 1/2 in. drive
7/1 6 in. socket with 1/2 in. drive
3/4 in. socket with 1/2 in. drive
3/4 in. combination box and open end wrench
Putty knife
Slip joint pliers
Ball peen hammer
Cold Chisel

SUPPLIES: Lockwire (Item 61, Appendix D)
Drycleaning solvent (Item 55, Appendix D)
Rags (Item 65, Appendix D)
Key washer (4 required)
Self-locking nut
Pencil (Item 71, Appendix D)
Paper (Item 72, Appendix D)
Gloves (Item 69, Appendix D)
Goggles (Item 70, Appendix D)

PRELIMINARY PROCEDURE: Remove transmission shroud (page 9-2).

Go on to Sheet 2

TA248473

TRANSMISSION SHROUD REPAIR (Sheet 2 of 6)

DISASSEMBLY:

1. Using 7/16 inch socket, remove six screws (A), lockwashers (B) and flat washers (C) holding retainer (D) to transmission shroud (E).

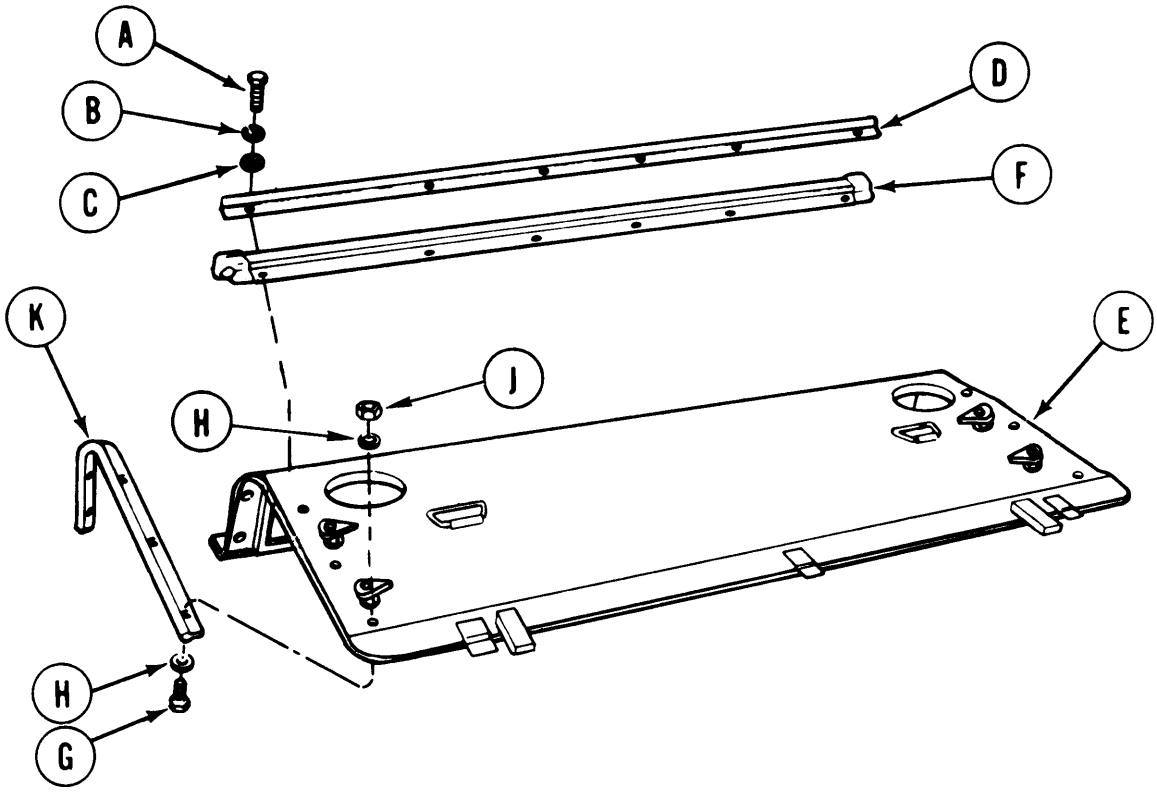

2. Remove retainer (D) from shroud (E).

3. Remove seal assembly (F) from shroud (E).

4. Using 7/16 inch socket and 7/16 inch wrench, remove five screws (G), 10 flat washers (H), and five self-locking nuts (J) holding seal (K) to transmission shroud (E) both right and left sides.

5. Remove seal assembly (K) from shroud (E).

TA248474

Go on to Sheet 3

TRANSMISSION SHROUD REPAIR (Sheet 3 of 6)

6. Using diagonal cutting pliers, remove lockwire (L) from 21 screws (M) on back side of retainer (N).

7. Using hammer and chisel, straighten tabs on four key washers (P).

NOTE

Write down location of these four key washers for use when assembling shroud.

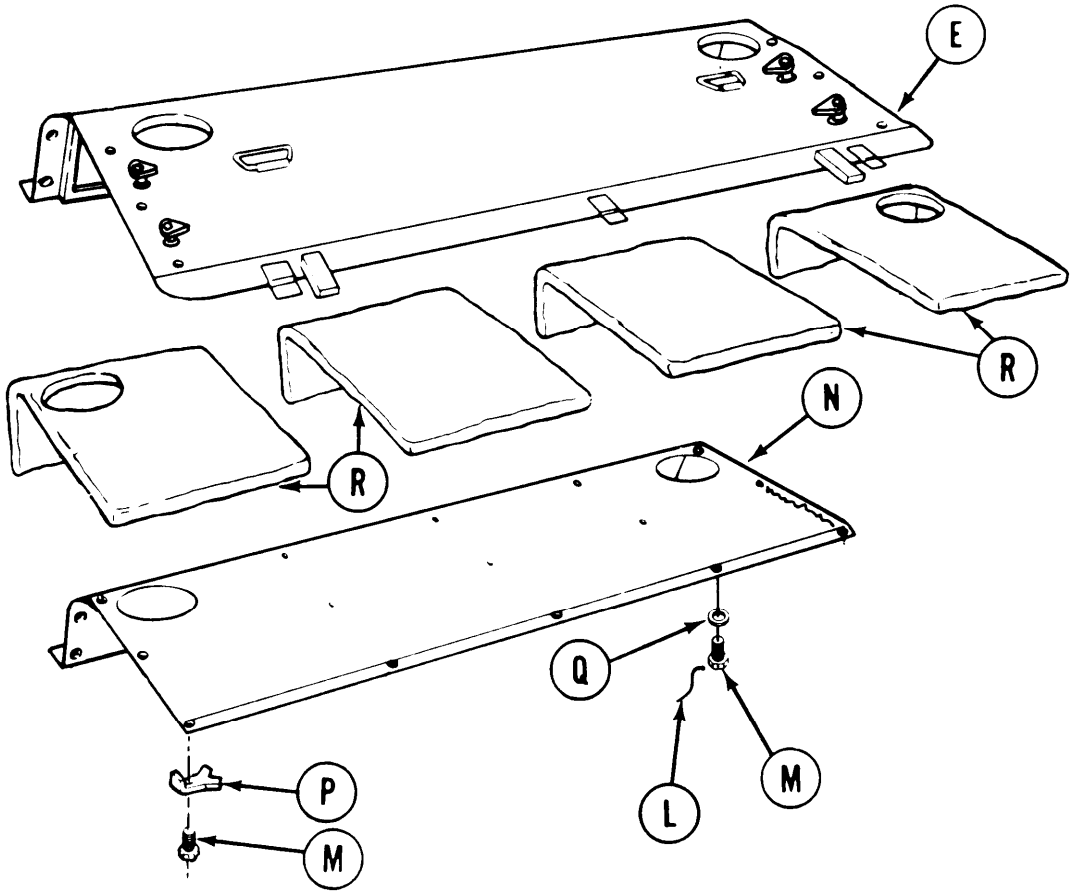

NOTE

If desired, a speed wrench may be used to remove screws (M).

8. Using 7/16 inch socket, remove 25 screws (M), 21 flat washers (Q), and four key washers (P) holding retainer (N) to shroud (E).

9. Remove retainer (N) from shroud (E).

10. Remove insulation (R) from shroud (E). Use putty knife as necessary.

Go on to Sheet 4

TA248475

TRANSMISSION SHROUD REPAIR (Sheet 4 of 6)

11. Using 3/4 inch socket and 3/4 inch wrench, remove three turnlock fasteners (S) from both sides of shroud (E).

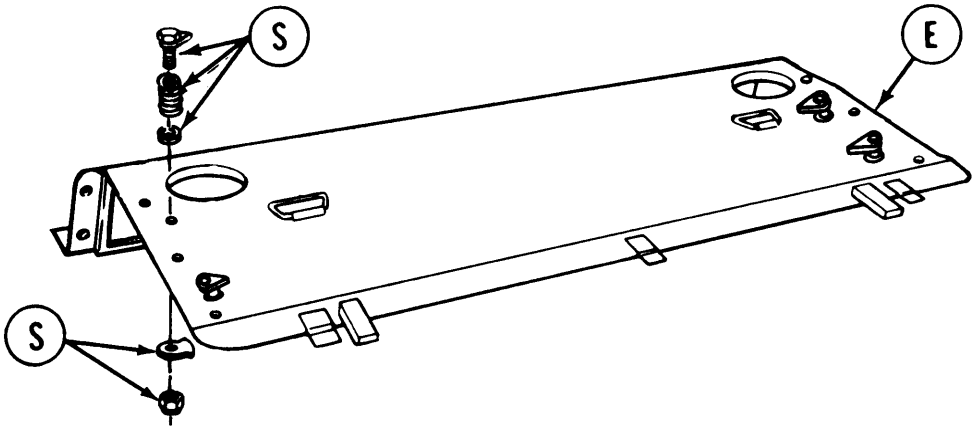

CLEANING AND INSPECTION:

WARNING

Dry cleaning solvent P-D-680 is toxic and flammable. To prevent personal injury, wear protective goggles and gloves and use only in a well-ventilated area Avoid contact with skin, eyes and clothes and don't breathe vapors. Do not use near open flame or excessive heat. The flash point for Type #1 Dry Cleaning Solvent is 100°F (38°C) and for Type #2 is 138°F (50°C). If you become dizzy while using cleaning solvent, get fresh air immediately and get medical aid. If contact with eyes is made, wash your eyes with water and get medical aid immediately.

1. Using dry cleaning solvent and rags, clean all parts of transmission shroud.

2. Inspect assembly for worn or damaged parts.

3. Replace faulty parts.

Go on to Sheet 5

TA248476

TRANSMISSION SHROUD REPAIR (Sheet 5 of 6)

ASSEMBLY:

1. Position insulation (A) on shroud (B).

2. Using 7/16 inch socket, install retainer (C) to shroud with 25 screws (D), 21 washers (E), and four new key washers (F). Be sure to position four key washers (F) properly and bend tabs with chisel and hammer.

NOTE

Both parts of turn lock fasteners must be pointing in the same direction.

3. Using 3/4 inch socket and 3/4 inch wrench, install three turnlock fasteners (G) to both sides of shroud (B). Use new self-locking nuts.

4. Using slip joint pliers, install new lockwire in 21 screws (D) (page C-34).

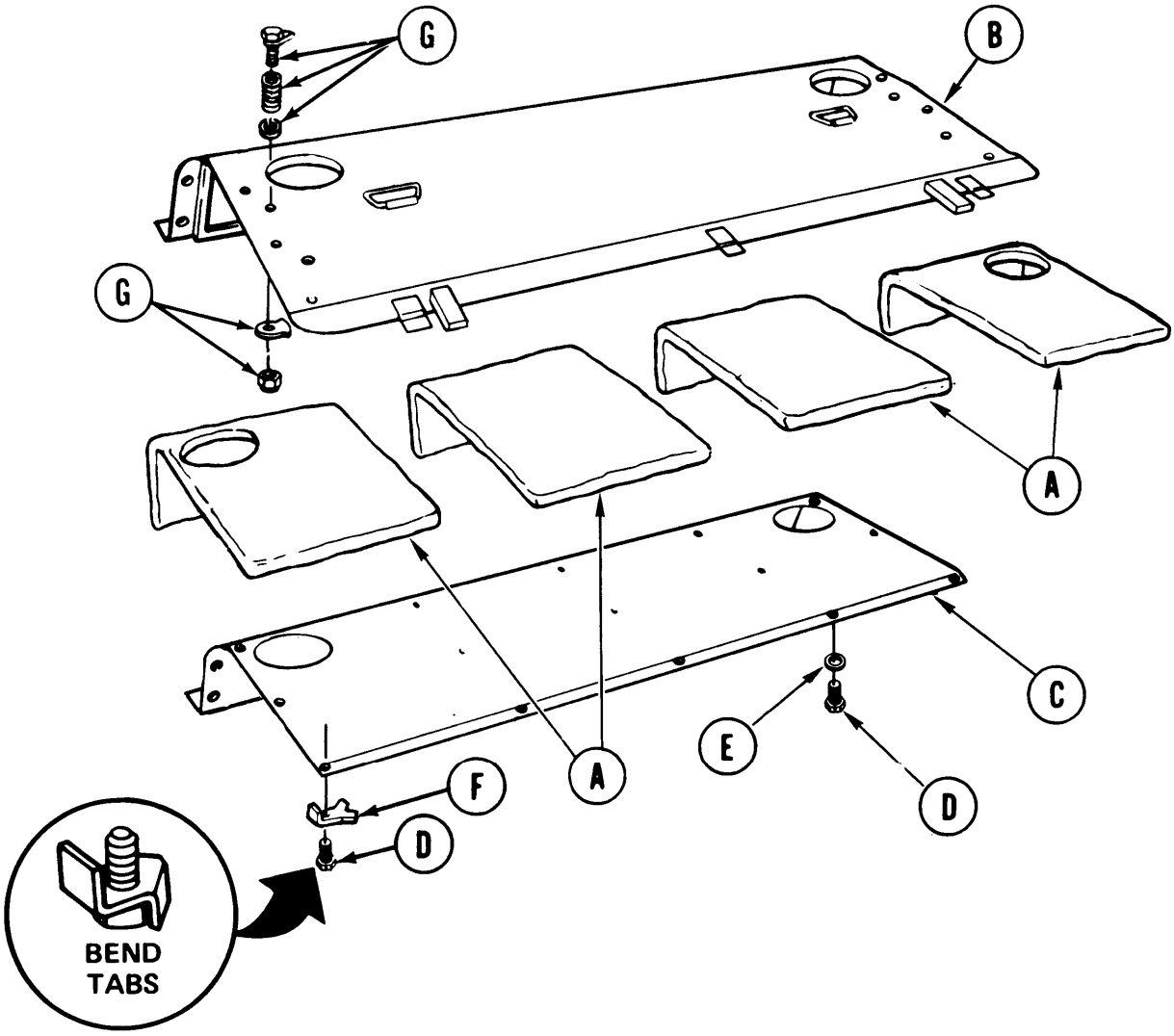

Go on to Sheet 6

TA248477

TRANSMISSION SHROUD REPAIR (Sheet 6 of 6)

5. Using 7/16 inch socket and 7/16 inch wrench, install seal (H) to shroud (B), both sides, with 10 screws (J), 20 washers (K), and 10 self-locking nuts (L).

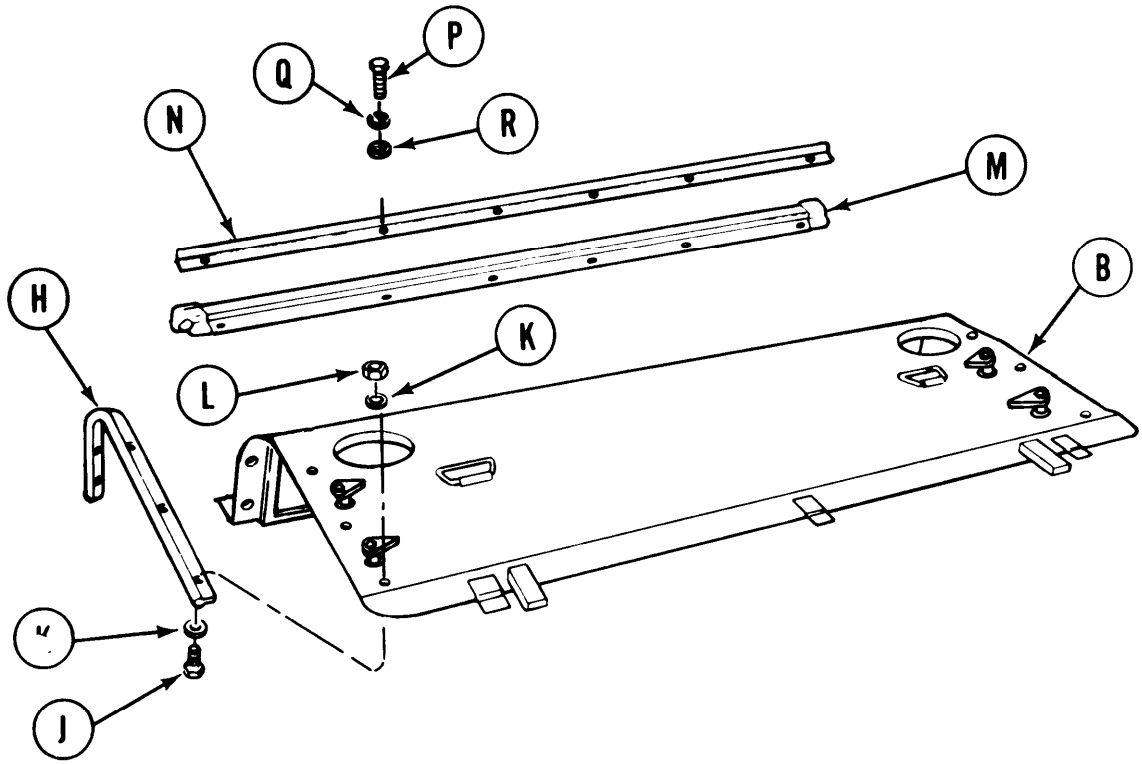

6. Position seal (M) and retainer (N) to shroud (B) with six screws (P), lockwashers (Q), and flat washers (R).

7. Using 7/16 inch socket, tighten six screws (P).

8. Install transmission shroud (page 9-6).

End of Task

TA248478

TRANSMISSION SHROUD SUPPORTS (LEFT OR RIGHT) REPLACEMENT (Sheet 1 of 1)

TOOLS: Ratchet with 1/2 in. drive
9/16 in. socket with 1/2 in. drive
2 in. extension with 1/2 in. drive

PRELIMINARY PROCEDURES: Remove transmission shroud assembly (page 9-2).

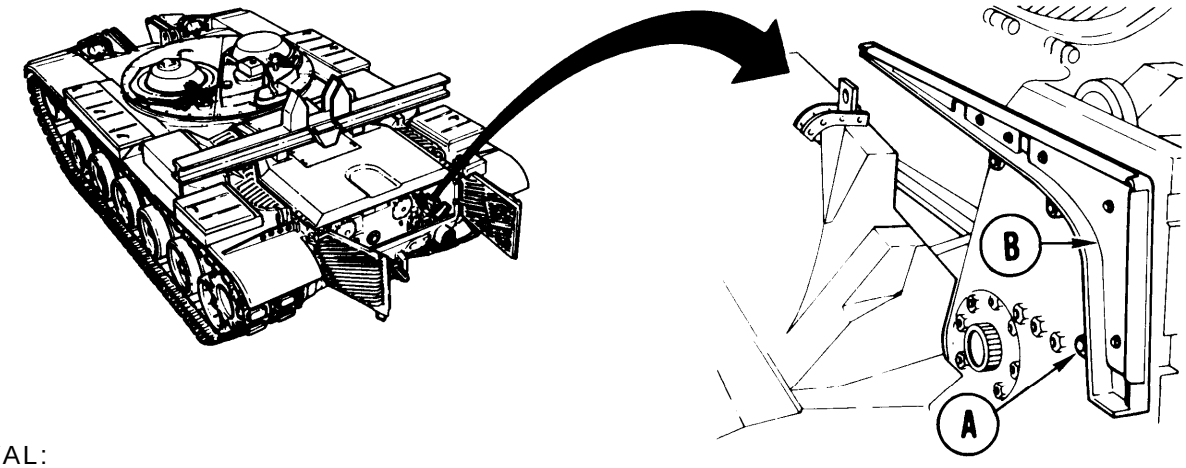

REMOVAL:

1. Using socket and extension, remove three screws, washers, and lockwashers (A) holding (left or right) support (B) to hull wall.

2. Remove supports from vehicle.

INSTALLATION:

1. Position support (B) (left or right) on hull wall and attach supports with three screws, washers, and lockwashers (A).

2. Using socket and extension, tighten three screws, washer, and lockwasher (A).

3. Install transmission shroud assembly (page 9-6).

End of Task

TA248479

TRANSMISSION SHROUD SUPPORT REPAIR (Sheet 1 of 6)

PROCEDURE INDEX

PROCEDURE	PAGE
Disassembly	9-16
Assembly	9-19

TOOLS: Putty knife
Ratchet with 1/2 in. drive
7/1 6 in. socket with 1/2 in. drive
Cross-tip screwdriver
Flat-tip screwdriver

SUPPLIES: Drycleaning solvent (Item 55, Appendix D)
Silicone adhesive (Item 7, Appendix D)
Rags (Item 65, Appendix D)
Gloves (Item 69, Appendix D)
Goggles (Item 70, Appendix D)

PRELIMINARY PROCEDURE: Remove shroud supports (page 9-15).

DISASSEMBLY:

1. Using cross-tip screwdriver, remove four screws (A) and washers (B) holding retainer (C) to bracket (D).

2. Using flat-tip screwdriver, remove retainer (C), seal (E), and retainer (F) from bracket (D).

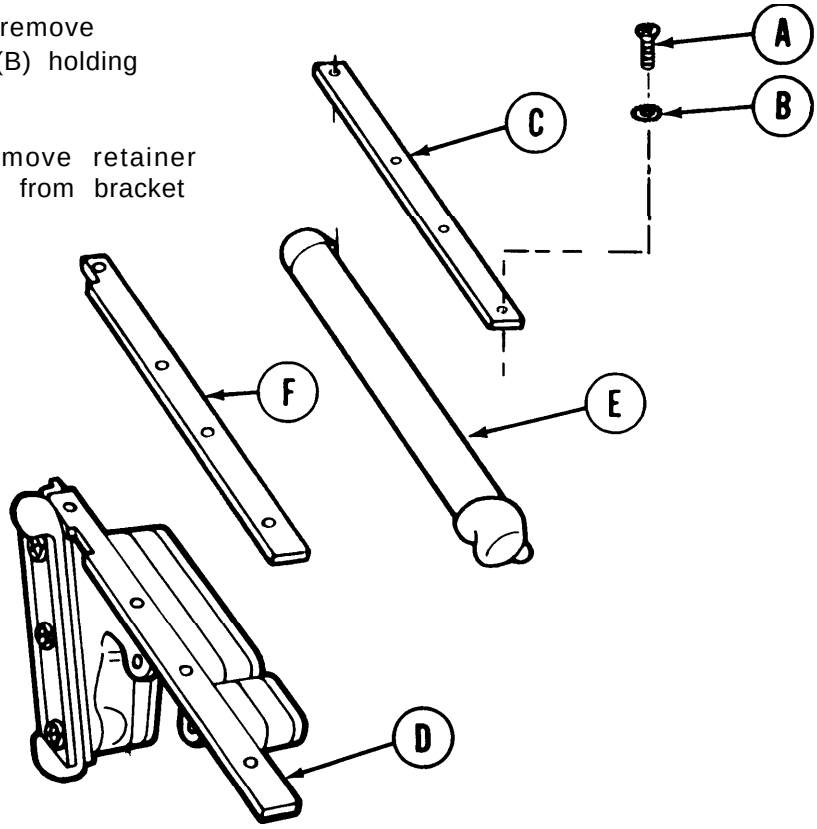

Go on to Sheet 2

TA248480

TRANSMISSION SHROUD SUPPORT REPAIR (Sheet 2 of 6)

3. Using socket, remove five screws (G), lockwashers (H), and flat washers (J) securing retainers (K) to shroud bracket (D).

4. Remove retainers (K) and side insulation (L) from shroud bracket (D).

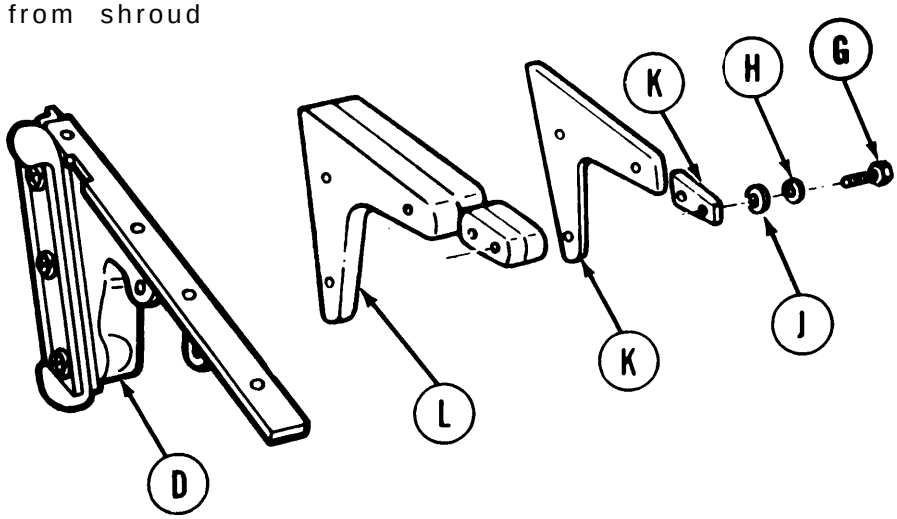

5. Using cross-tip screwdriver, remove three screws (M) and lockwashers (N) securing retainer (P) to shroud bracket (D).

6. Using flat-tip screwdriver, remove retainer (P), seal (Q), and retainer (R) from shroud bracket (D).

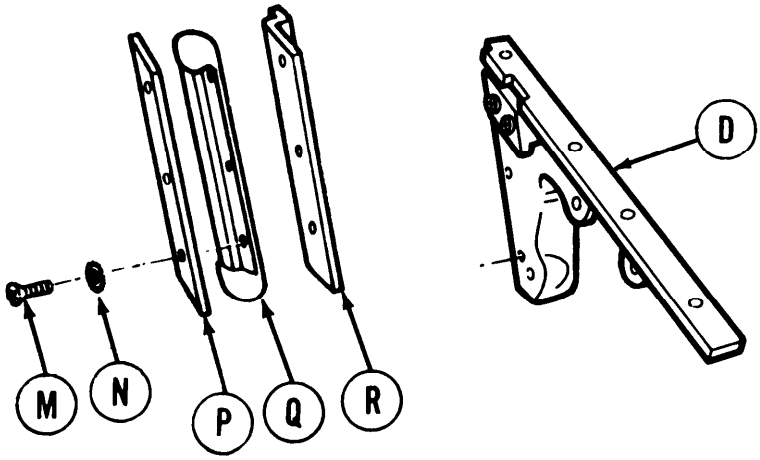

Go on to Sheet 3

TA248481

TRANSMISSION SHROUD SUPPORT REPAIR (Sheet 3 of 6)

7. Using cross-tip screwdriver, remove two screws (S) and washers (T) holding pad (U) to shroud bracket (D).

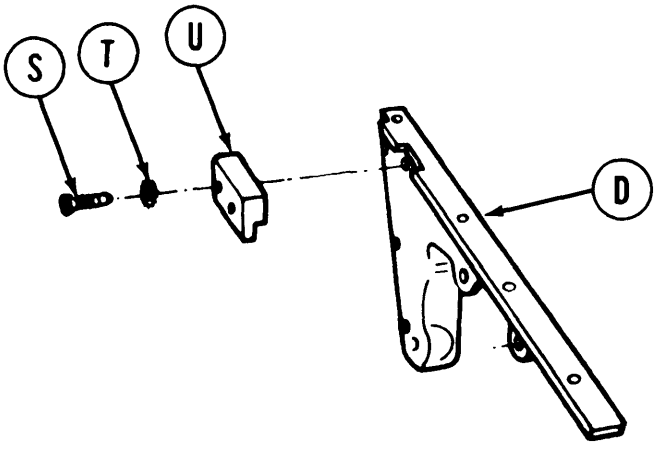

8. Using putty knife, dry cleaning solvent, and rags, clean insulation from shroud bracket (D).

Go on to Sheet 4

TA248482

TRANSMISSION SHROUD SUPPORT REPAIR (Sheet 4 of 6)

ASSEMBLY:

1. Install pad (A) to shroud bracket (B) using screw (C) and washer (D).

2. Using cross-tip screwdriver, tighten screw (C).

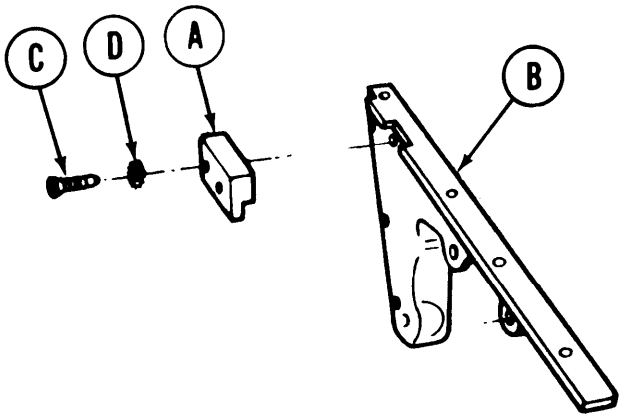

3. Using putty knife, apply adhesive to retainer (E) and (F).

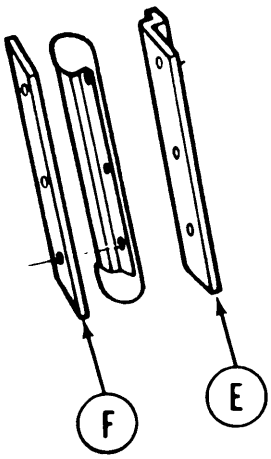

TA248483

Go on to Sheet 5

TRANSMISSION SHROUD SUPPORT REPAIR (Sheet 5 of 6)

4. Install retainer (E), seal (G), and retainer (F) to bracket (B), using three screws (H) and washer (J).

5. Using cross-tip screwdriver, tighten screws (H).

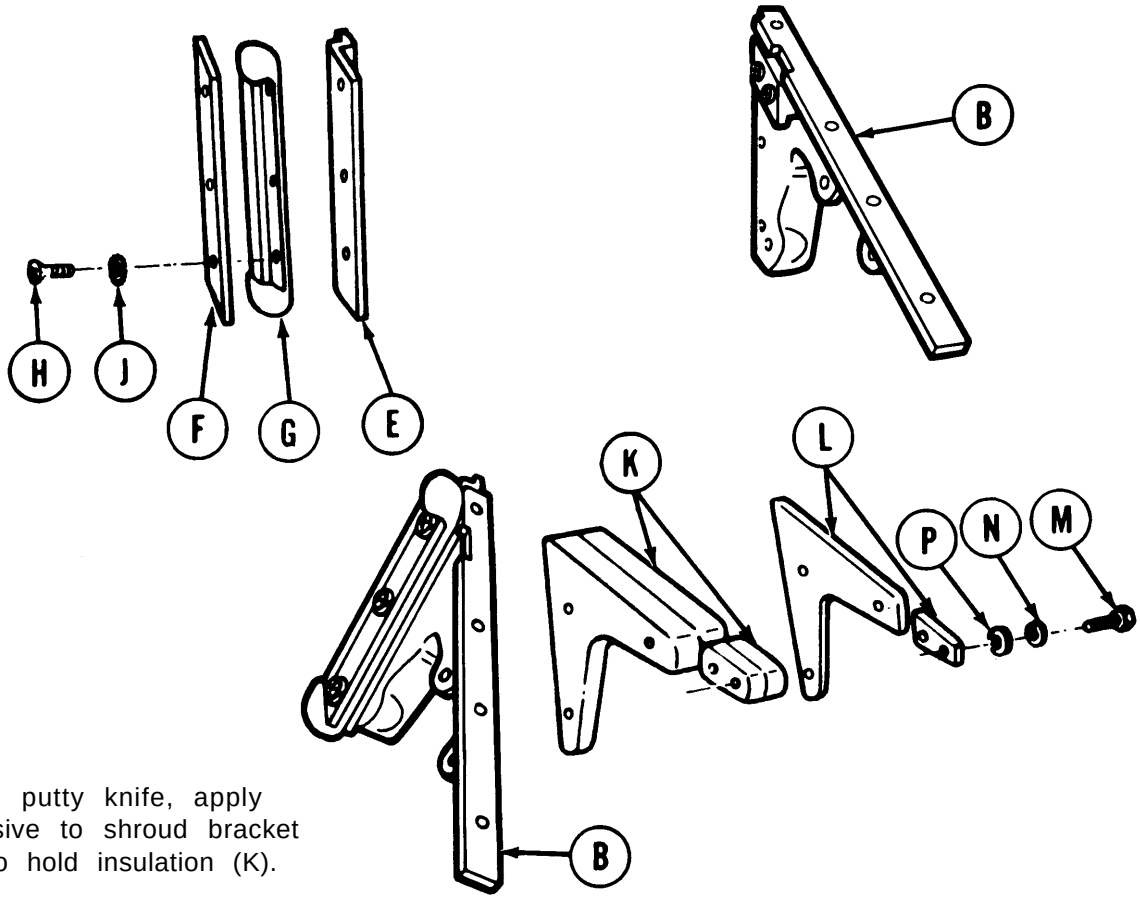

6. Using putty knife, apply adhesive to shroud bracket (B) to hold insulation (K).

7. Install insulation (K) and retainers (L) to shroud bracket (B) using five screws (M), lockwashers (N), and flat washers (P).

8. Using socket, tighten screws (M).

Go on to Sheet 6

TA248484

TRANSMISSION SHROUD SUPPORT REPAIR (Sheet 6 of 6)

9. Using putty knife, apply adhesive to retainer (Q) to hold seal (R).

10. Install retainer (Q), seal (R), and retainer (S) to bracket (B) using four screws (T) and washers (U).

11. Using cross-tip screwdriver, tighten screws (T).

12. Install transmission shroud support (page 9-15).

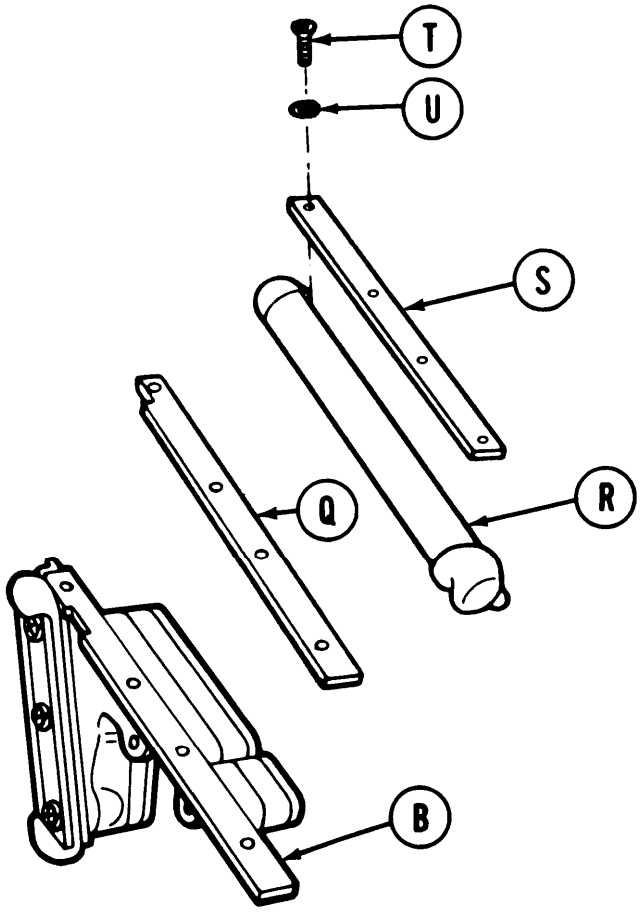

TA248485

End of Task

TRANSMISSION SHROUDS REPLACEMENT (Sheet 1 of 8)

PROCEDURE INDEX

PROCEDURE	PAGE
Right intermediate Shroud Replacement	9-22
Lower Shroud Replacement	9-27
Left Intermediate Shroud Replacement	9-29

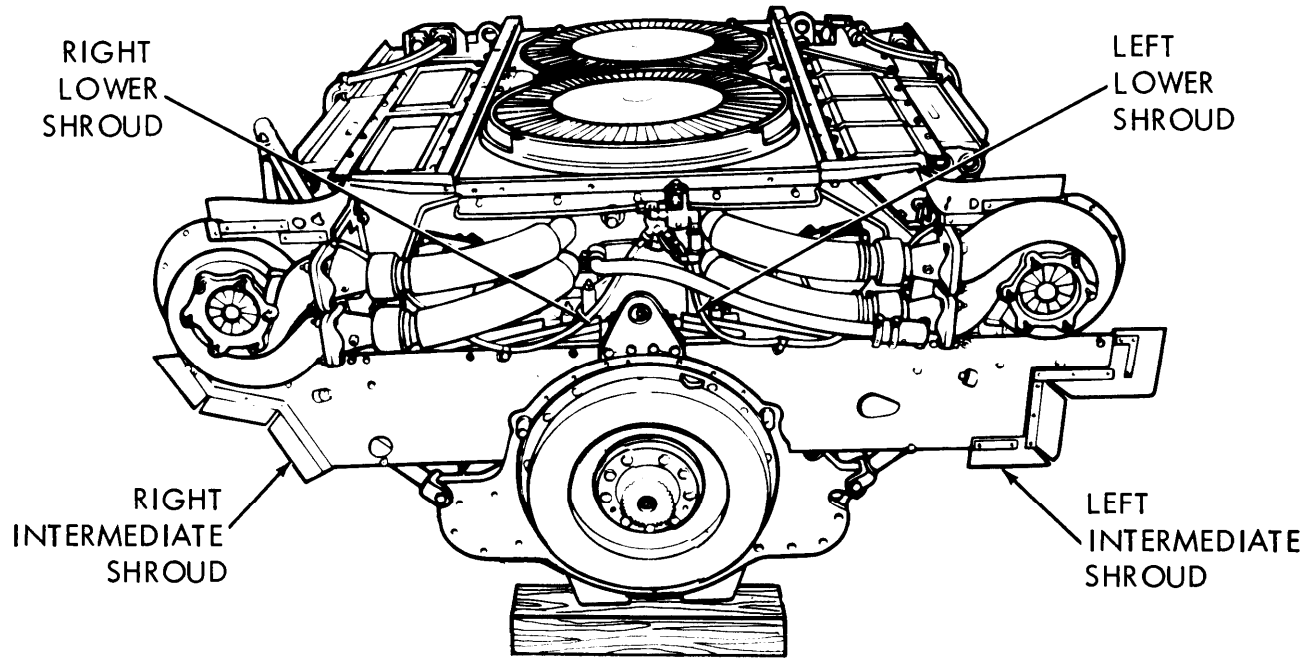

Right Intermediate Shroud Replacement (Sheet 1 of 5)

PROCEDURE INDEX

PROCEDURE	PAGE
Removal	9-22
Installation	9-25

TOOLS: 1/2 in. socket with 1/2 in. drive
Ratchet with 1/2 in. drive
1/2 in, combination box and open end wrench
Spanner wrench

PRELIMINARY PROCEDURE: Remove powerplant (page 5-2).

Go on to Sheet 2

TA248486

TRANSMISSION SHROUDS REPLACEMENT (Sheet 2 of 8)
Right Intermediate Shroud Replacement (Sheet 2 of 5)

REMOVAL:

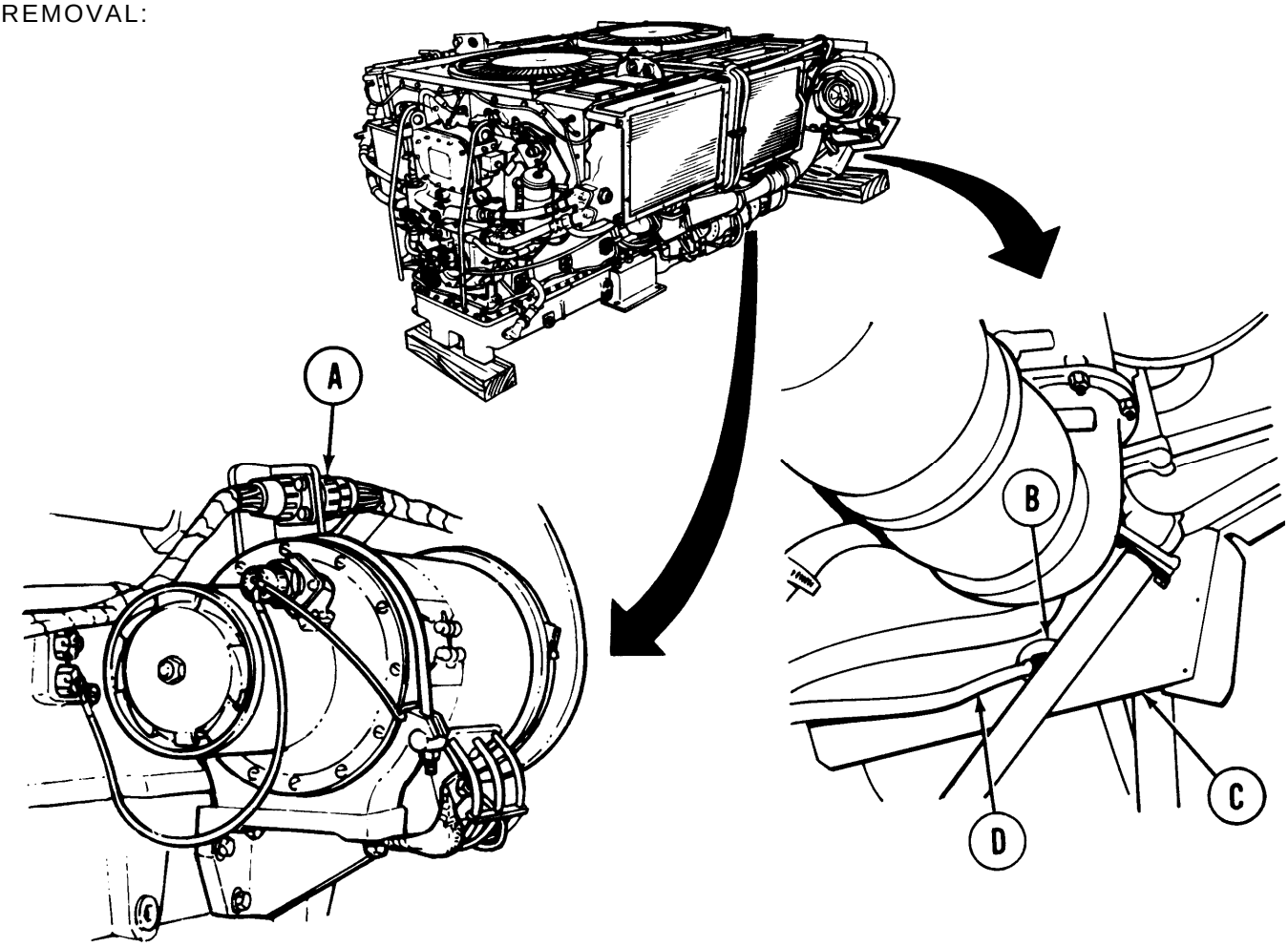

1. Using spanner wrench, disconnect cable connector (A) from generator connector.

2. Remove grommet (B) from shroud (C) and cable assembly (D).

3. Inspect grommet (B) for defects. If defective, replace grommet.

4. Pull cable assembly (D) through shroud (C).

TA248487

Go on to Sheet 3

TRANSMISSION SHROUDS REPLACEMENT (Sheet 3 of 8)

Right Intermediate Shroud Replacement (Sheet 3 of 5)

NOTE

Intermediate shroud is located between transmission and engine.

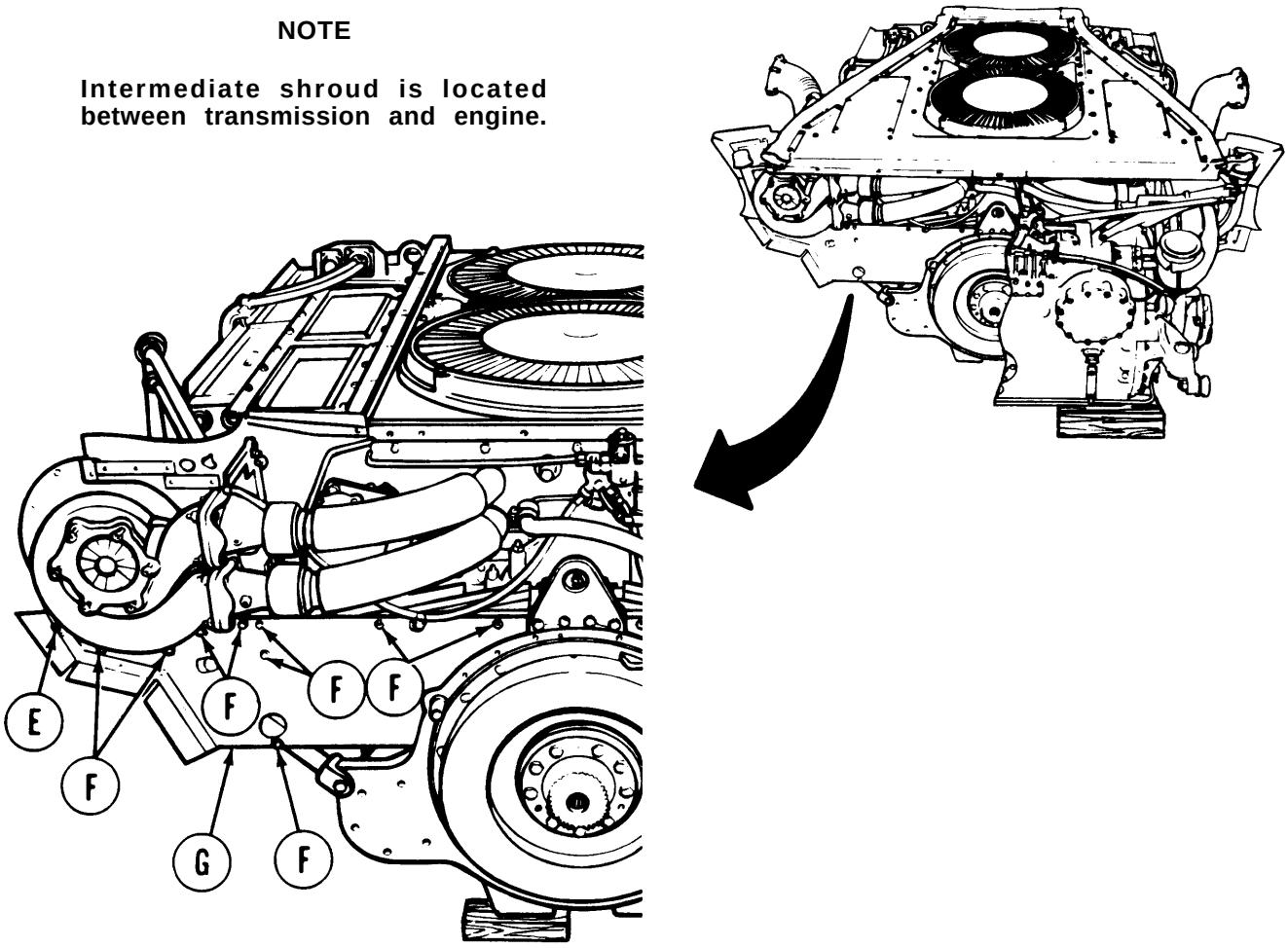

TRANSMISSION REMOVED FOR CLARITY

5. Using socket and wrench, remove screw, lockwasher, and nut (E).

6. Using socket or wrench, remove nine screws and lockwashers (F).

7. Remove intermediate shroud (G).

Go on to Sheet 4

TA248488

Transmission SHROUDS REPLACEMENT (Sheet 4 of 8)
Right Intermediate Shroud Replacement (Sheet 4 of 5)

INSTALLATION:

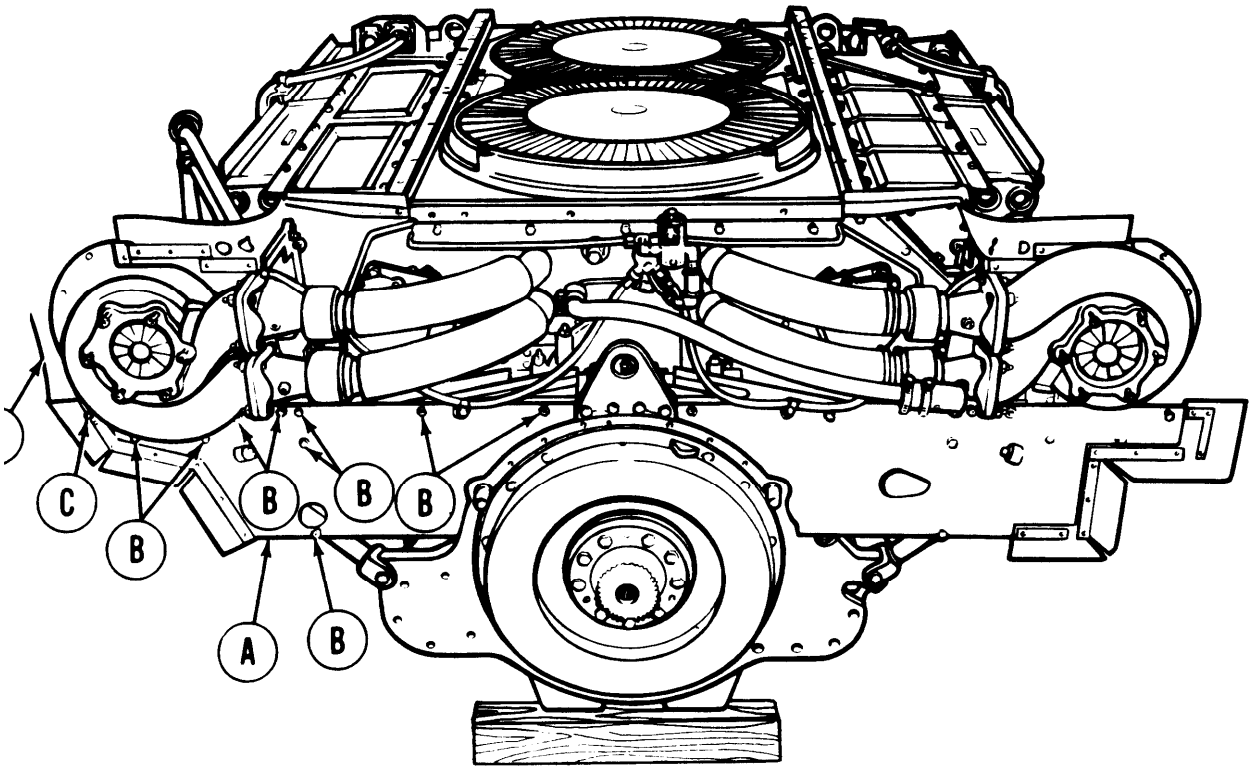

TRANSMISSION REMOVED FOR CLARITY

1. Position intermediate shroud (A) into place on engine.
2. Install nine screws and washers (B) to secure intermediate shroud (A) to engine.
3. Install screw, lockwasher, and nut (C) to secure intermediate shroud (A) to turbocharger shroud (D).
4. Using socket and wrench, tighten screws (B and C).

TA248489

Go on to Sheet 5

TRANSMISSION SHROUDS REPLACEMENT (Sheet 5 of 8)
Right Intermediate Shroud Replacement (Sheet 5 of 5)

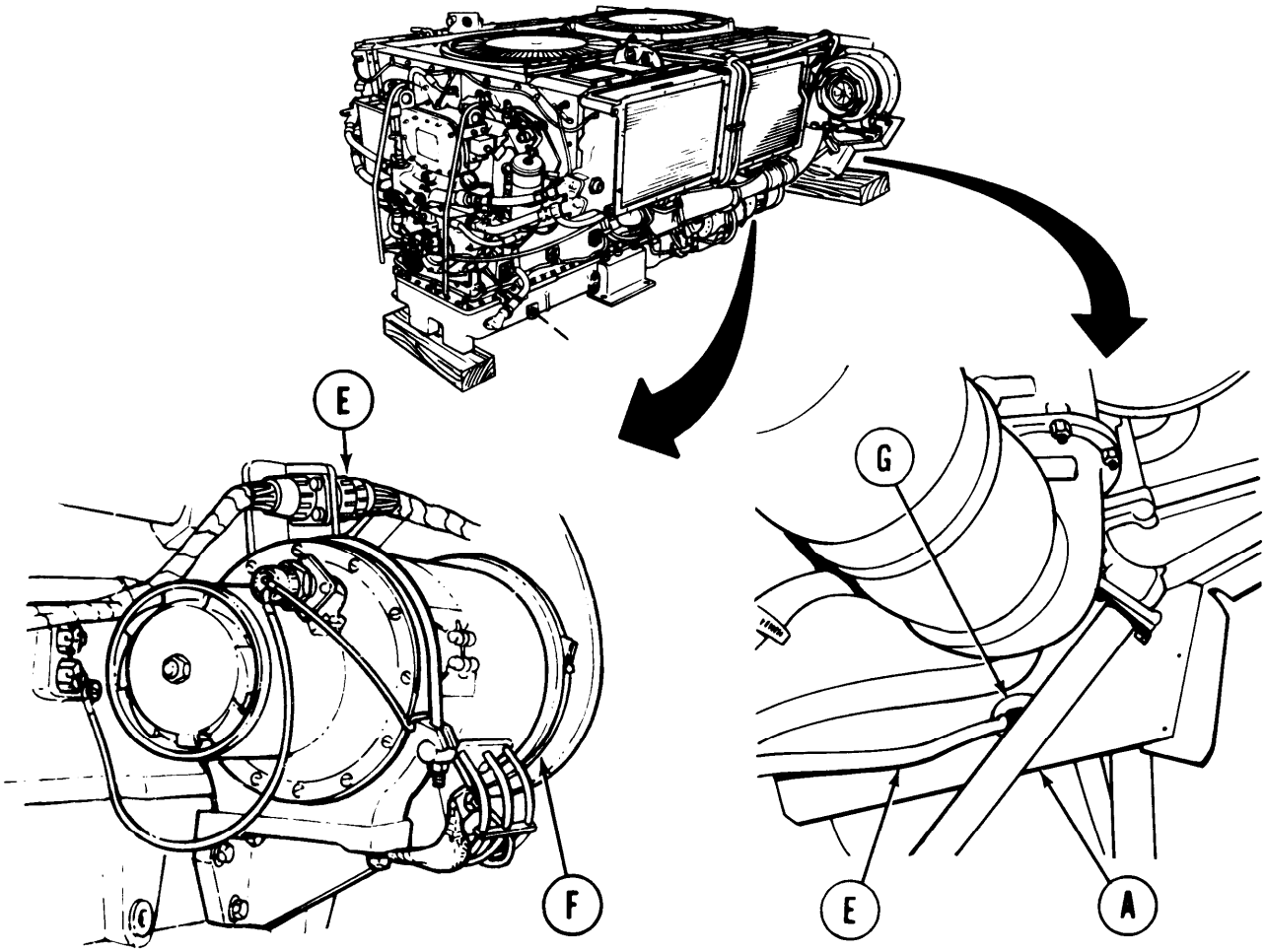

5. Install cable assembly (E) through intermediate shroud (A).

6. Route cable assembly (E) to generator (F).

7. Using spanner wrench, connect cable assembly (E) connector to generator (F) connector.

8. Install grommet (G) around cable assembly (E) and into intermediate shroud (A).

9. Install powerplant (page 5-14)

End of Task

TA248490

TRANSMISSION SHROUDS REPLACEMENT (Sheet 6 of 8)
Lower Shroud Replacement (Sheet 1 of 2)

TOOLS: 1/2 in. socket with 1/2 in. drive
Ratchet with 1/2 in. drive
1/2 in. combination box and open end wrench
6 in. flat-tip screwdriver
2 in. flat-tip screwdriver

PRELIMINARY PROCEDURES: Remove powerplant (page 5-2).
Remove engine shroud (page 9-30).
Remove generator air exhaust pipe and hose (page 10-14) (right side only).

NOTE

Replacement of right and left lower shrouds (A) is similar. Left lower shroud (A) is shown.

NOTE

When lower shroud is removed, a grommet (G) may come out with it or stay on fuel return line.

REMOVAL:

1. Using 2 inch screwdriver, remove screw (B).
2. Using 6 inch screwdriver, remove screw (C).
3. Using socket or wrench, remove three screws and washers (D).
4. Using socket or wrench, remove screw and washer (E) securing clamp (F).
5. Remove lower shroud (A). Be careful not to damage fuel return line when removing shroud (A).
6. Inspect grommet (G) for tears or deterioration. Replace if defective.

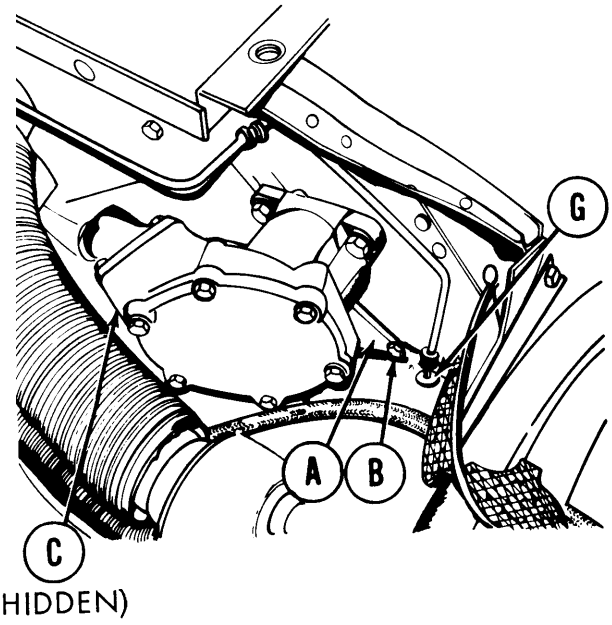

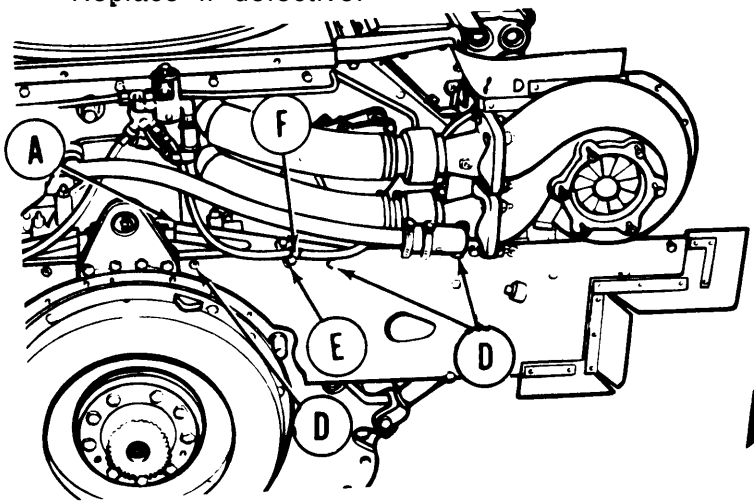

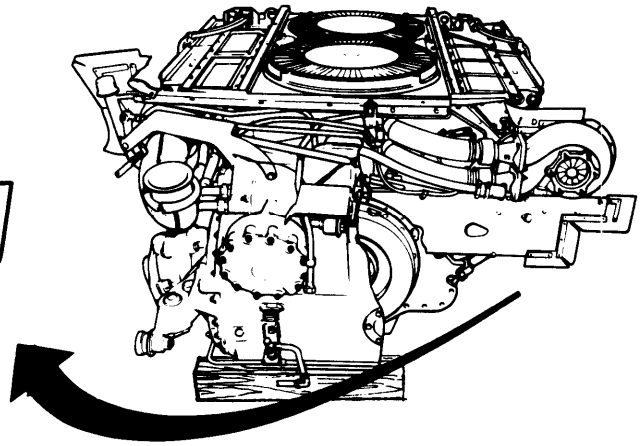

TA248491

Go on to Sheet 2

TRANSMISSION SHROUDS REPLACEMENT (Sheet 7 of 8)
Lower Shroud Replacement (Sheet 2 of 2)

INSTALLATION:

1. Position grommet (A) on fuel line.
2. Position lower shroud (B) in place on engine and on grommet (A).
3. Using 2 inch screwdriver, install screw (C).
4. Using 6 inch screwdriver, install screw (D).
5. Using 1/2 inch socket or wrench, install three screws and washers (E).
6. Using 1/2 inch socket or wrench, install screw and washer (F) securing clamp (G).
7. Install generator air exhaust pipe and hose (page 10-16) (if removed).
8. Install engine shroud (page 9-31).
9. Install powerplant (page 5-14).

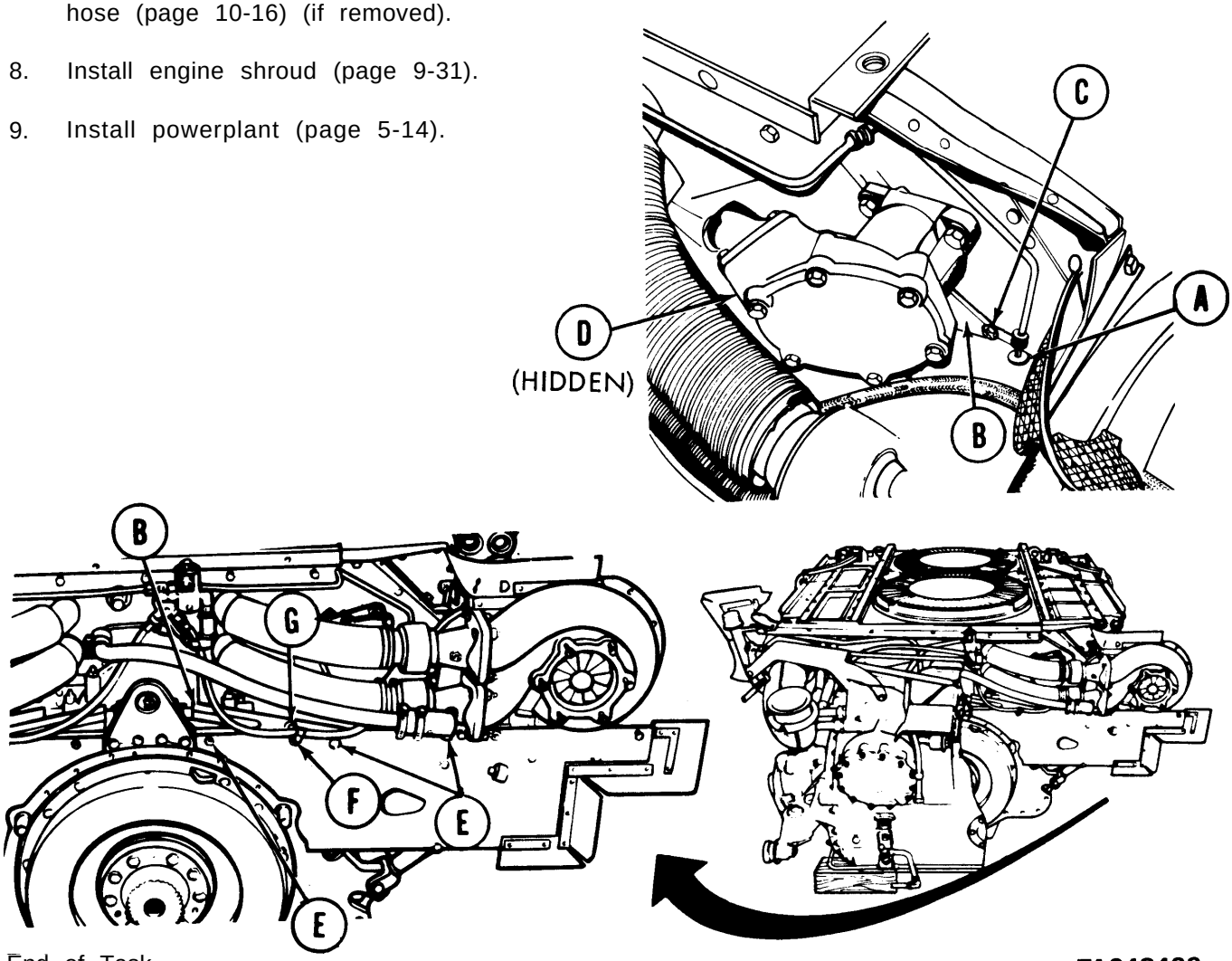

End of Task

TA248492

TRANSMISSION SHROUDS REPLACEMENT (Sheet 8 of 8)
Left Intermediate Shroud Replacement (Sheet 1 of 1)

TOOLS: 1/2 in. socket with 1/2 in. drive
Ratchet with 1/2 in. drive
1/2 in. combination box and open end wrench

PRELIMINARY PROCEDURES: Remove powerplant (page 5-2)
Remove oil filler (upper) tube (page 6-84)

REMOVAL:

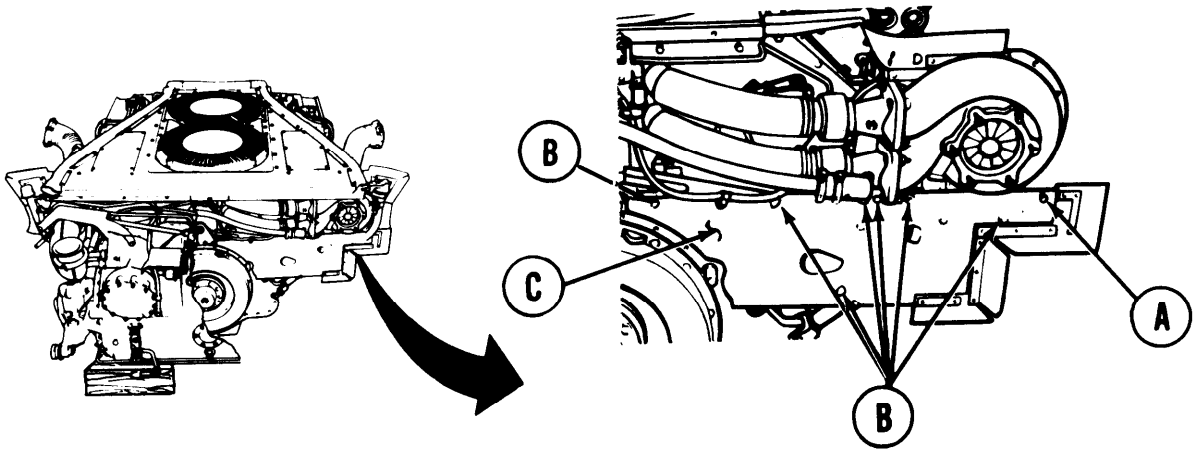

1. Using socket and wrench, remove screw, lockwasher, and nut (A).
2. Using wrench or socket, remove seven screws and washers (B) securing intermediate shroud (C) to engine.
3. Remove intermediate shroud (C).

INSTALLATION:

1. Position intermediate shroud (C) into place on engine.
2. Install seven screws and washers (B) to secure intermediate shroud (C) to engine.
3. Install screw, lockwasher, and nut (A).
4. Using wrench and socket, tighten screws (A and B).
5. Install engine oil filler tube (page 6-86).
6. Install powerplant (page 5-14)

TA248493

End of Task

ENGINE SHROUD REPLACEMENT (Sheet 1 of 2)

TOOLS: Ratchet with 1/2 in. drive
9/16 in. socket with 1/2 in. drive
2 in. extension with 1/2 in. drive
Torque wrench with 1/2 in. drive (0-175 lb-ft) (0-237 NŽm)
6 in. cross-tip screwdriver

PERSONNEL: Two

PRELIMINARY PROCEDURES: Remove top deck assembly (page 16-21)
Remove transmission shroud (page 9-2).

REMOVAL:

1. Using socket and extension, remove twenty screws, washers, and lockwashers (A) securing engine shroud (B) to powerplant.

2. Using cross-tip screwdriver, remove two screws and lockwashers (C) securing engine shroud (B) to powerplant.

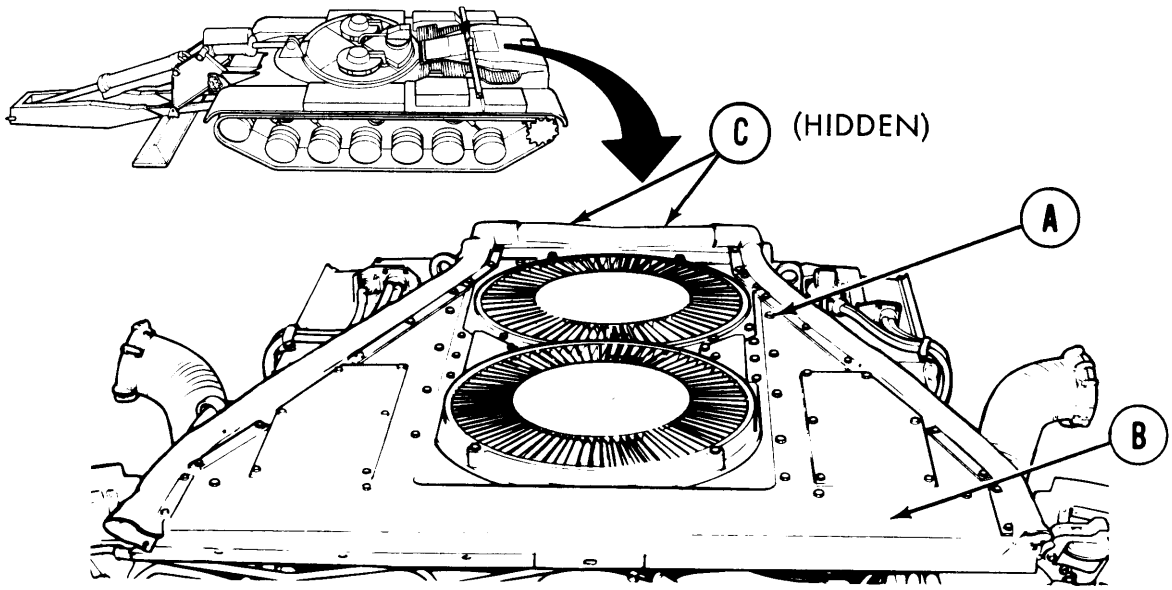

3. Remove engine shroud (B) from powerplant.

Go on to Sheet 2

TA248494

ENGINE SHROUD REPLACEMENT (Sheet 2 of 2)

INSTALLATION:

1. Position engine shroud (A) on powerplant.

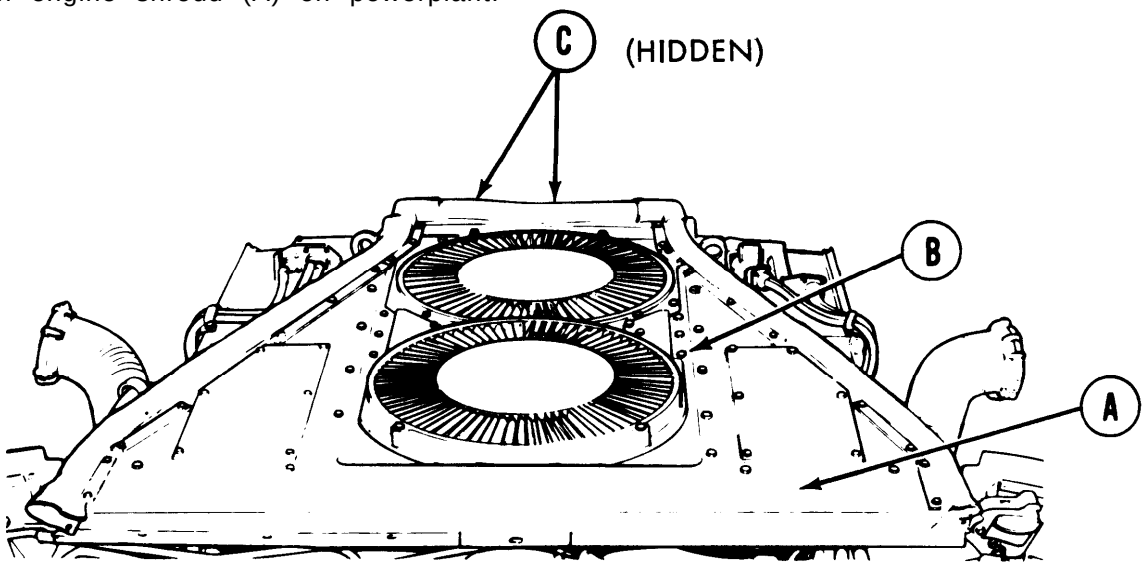

2. Using socket, install but do not tighten twenty screws, washers, and lockwashers (B) securing engine shroud (A) to powerplant.

3. Using torque wrench, tighten twenty screws (B) to 20-27 lb-ft (27-37 NŽm).

4. Using cross-tip screwdriver, install two screws and lockwashers (C) securing engine shroud (A) to powerplant.

5. Install transmission shroud (page 9-6).

6. Install top deck (page 16-23).

TA248495

End of Task

ENGINE SHROUD REPAIR OFF ENGINE (Sheet 1 of 2)

TOOLS: Putty knife
Ratchet with 1/2 in. drive
7/16 in. socket with 1/2 in. drive

SUPPLIES: Dry cleaning solvent (Item 55, Appendix D)
Rags (Item 65, Appendix D)
Adhesive (Item 4, Appendix D)
Insulation
Gloves (Item 69, Appendix D)
Goggles (Item 70, Appendix D)

PRELIMINARY PROCEDURES: Remove engine shroud (page 9-30).

DISASSEMBLY:

1. Using socket, remove six screws (A), lockwashers (B), and flat washers (C) securing retainer (D) to engine shroud (E) both sides.

2. Using socket, remove six screws (F), lockwashers (G), and flat washers (H) securing retainer (J) to engine shroud (E) both sides.

3. Remove retainers (D) and (J).

4. Using putty knife, remove insulation (K) and (L) from both sides of engine shroud (E).

5. Using dry cleaning solvent and rags, clean areas where insulation (K) and (L) were removed.

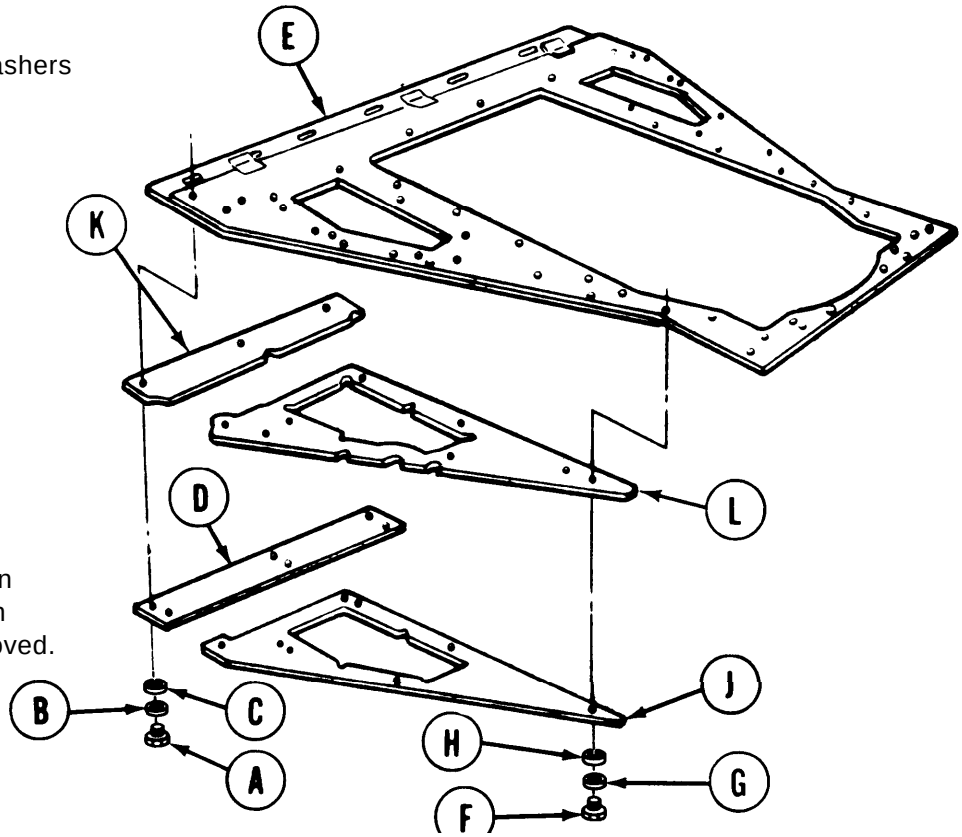

Go on to Sheet 2

TA248496

ENGINE SHROUD REPAIR OFF ENGINE (Sheet 2 of 2)

ASSEMBLY:

1. Using putty knife, apply adhesive to engine shroud (A) to hold new insulation (B) and (C) both sides.

2. Install insulation (B) and (C) to both sides at engine shroud (A).

3. Using socket, install retainer (D) with six screws (E), lockwashers (F), and flat washers (G) both sides.

4. Using socket, install retainer (H) with six screws (J), lockwashers (K), and flat washers (L) both sides.

5. Install engine shroud on engine (page 9-31).

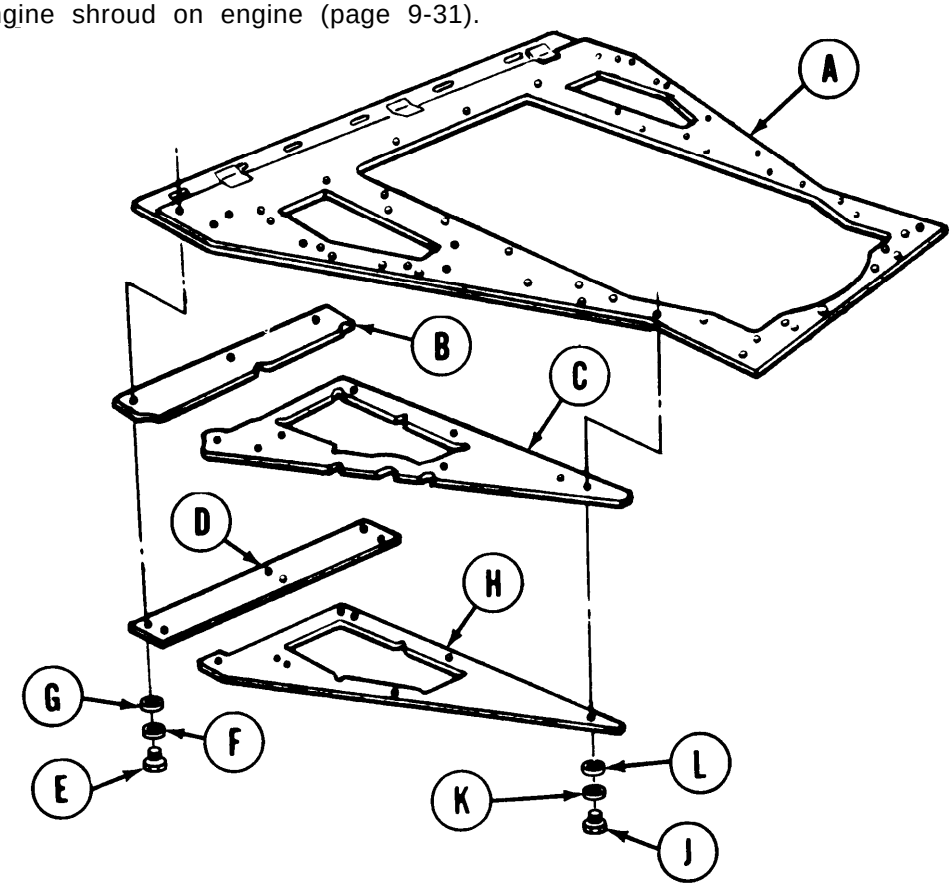

End of Task

TA248497

ENGINE SHROUD REPAIR ON THE ENGINE (Sheet 1 of 5)

PROCEDURE INDEX

PROCEDURE	PAGE
Disassembly	9-34
Assembly	9-36

TOOLS: Ratchet with 1/2 in. drive
7/16 in. socket with 1/2 in. drive
9/16 in. socket with 1/2 in. drive
2 in. extension with 1/2 in. drive
Putty knife
Cross-tip screwdriver

SUPPLIES: Adhesive (Item 4, Appendix D)
Dry cleaning solvent (Item 55, Appendix D)
Rags (Item 65, Appendix D)
Gloves (Item 69, Appendix D)
Goggles (Item 70, Appendix D)

PRELIMINARY PROCEDURES: Remove top deck assembly (page 16-21)
Remove transmission shroud (page 9-2).

DISASSEMBLY:

1. Using 7/16 inch socket, remove ten screws, washers and lockwashers (A) holding four seal (B) retainers (C) to engine shroud both right and left side.

2. Remove retainers (C) from shroud.

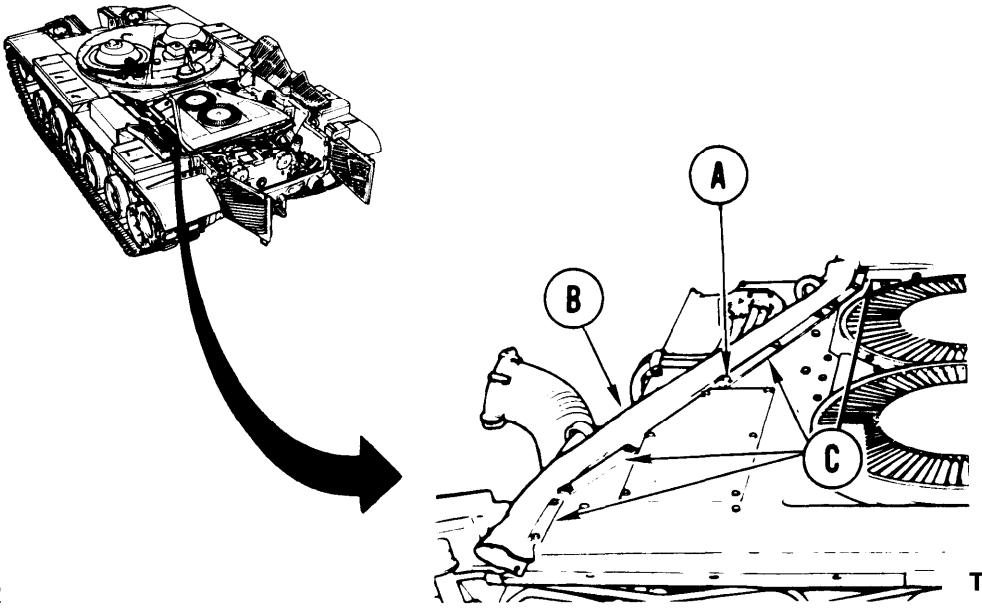

TA248498

Go on to Sheet 2

ENGINE SHROUD REPAIR ON THE ENGINE (Sheet 2 of 5)

3. Using screwdriver, remove two screws and lockwashers (D) hidden under seal, holding retainers (E) to engine shroud right and left side.

4. Remove retainers (E) from shroud.

5. Displace seals (B) from shroud right and left sides.

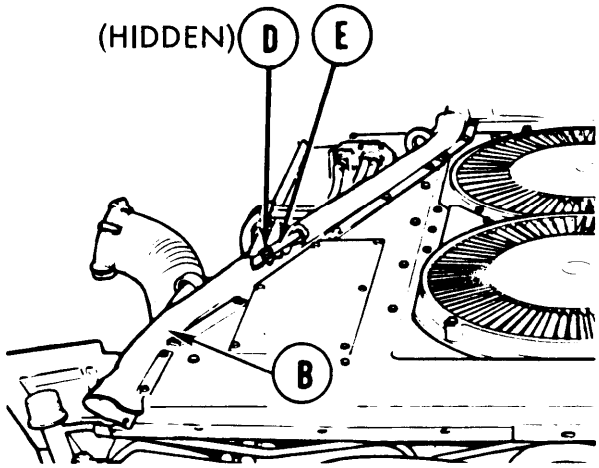

6. Using screwdriver, lift front seal (F) and remove two screws and lockwashers (G) holding retainer (H).

7. Remove retainer (H) from shroud.

8. Remove seal (F) from shroud.

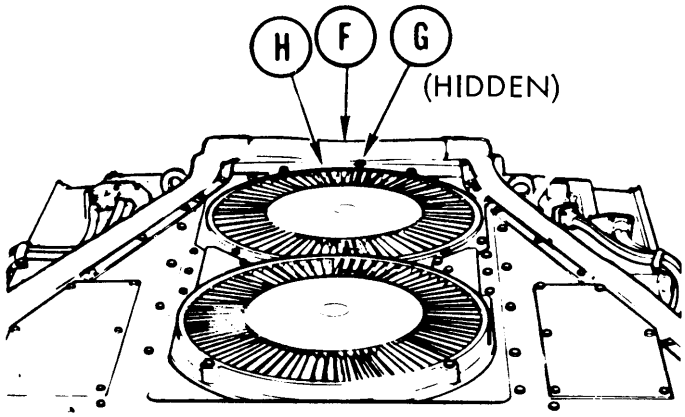

Go on to Sheet 3

TA248499

ENGINE SHROUD REPAIR ON THE ENGINE (Sheet 3 of 5)

9. Using screwdriver, remove six screws and lockwashers (J) from retainer (K).

10. Remove retainer (K) from shroud.

11. Remove seal (L) from shroud.

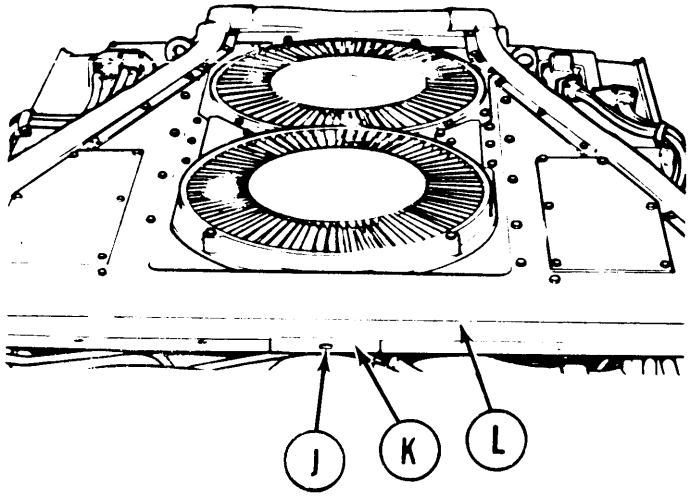

12. Using 9/16 inch socket, remove six screws, washers, and lockwashers (M) holding access plate (N) to right and left sides of shroud.

13. Remove access plate (N) with gasket from shroud.

14. Using putty knife, remove gasket from access plate (N).

WARNING

Cleaning agent specified is flammable. Use only in well ventilated areas. Keep away from flames, sparks, or heat. Do not smoke while using. Prevent contact with eyes, mouth, and/or skin. Wear rubber gloves when performing cleaning procedures

15. Clean with dry cleaning solvent and rags.

ASSEMBLY:

1. Using putty knife, apply adhesive to back side of access plates (A).

2. Install gaskets (B) to access plates (A).

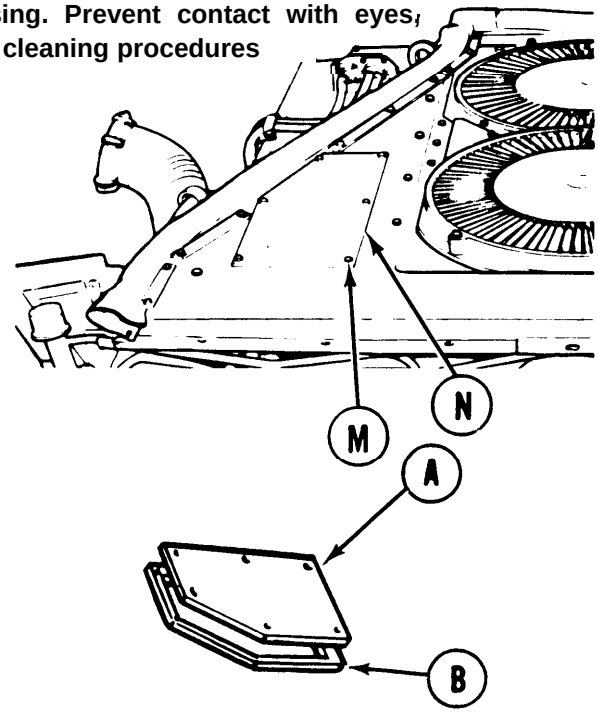

Go on to Sheet 4

TA248500

ENGINE SHROUD REPAIR ON THE ENGINE (Sheet 4 of 5)

3. Position access plates (A) on engine shroud (C).

4. Using 9/16 inch socket, install six screws, washers and lockwashers (D) to secure access plate (A) to shroud (C).

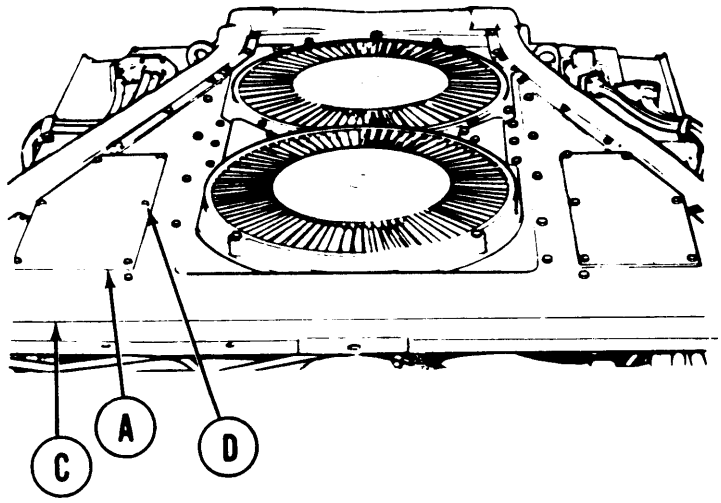

5. Install seal (E) and retainer (F) to shroud (C) using six screws and lockwashers (G).

6. Using screwdriver, tighten six screws (G).

7. Install seal (H) and retainer (J) to shroud (C) using two screws and lockwashers (K).

8. Using screwdriver, tighten two screws (K).

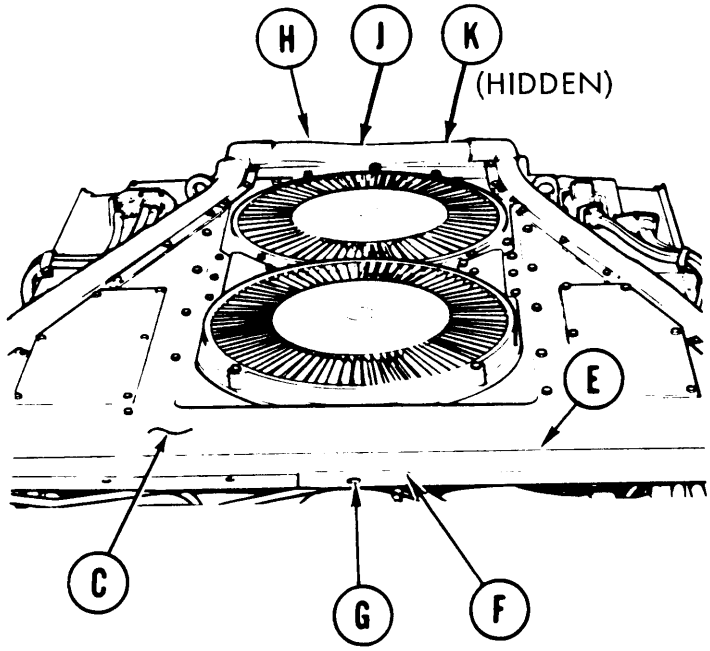

TA248501

Go on to Sheet 5

ENGINE SHROUD REPAIR ON THE ENGINE (Sheet 5 of 5)

9. Install retainer (L) to seal (M) and shroud using two screws and lockwashers (N) hidden under seals on both sides.

10. Using screwdriver, tighten two screws (N) on each side.

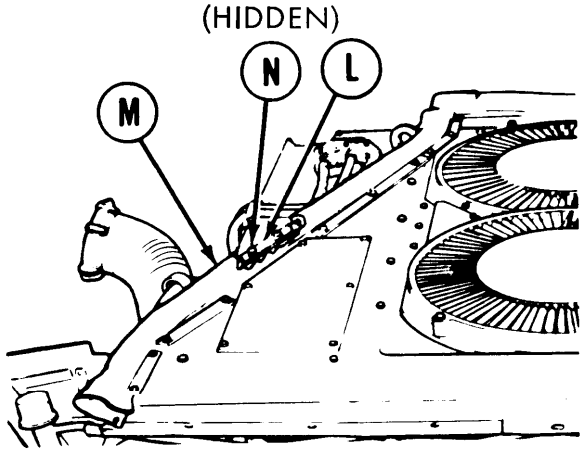

11. Install four retainers (P) to shroud both sides using ten screws, washers and lockwashers (Q).

12. Using 7/16 inch socket, tighten ten screws (Q).

13. Install transmission shroud (page 9-6).

14. Install top deck assembly (page 16-23).

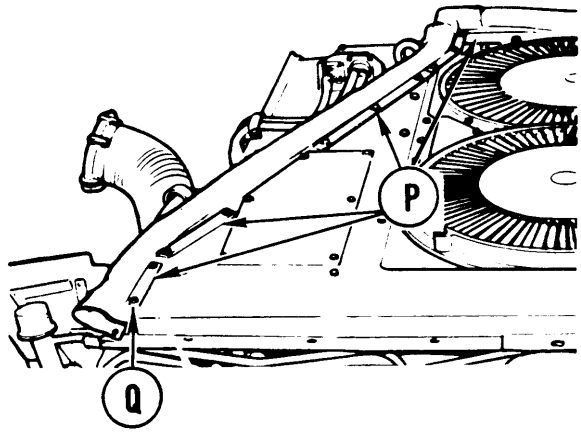

End of Task

TA248502

ENGINE SHROUD SUPPORT REPLACEMENT (Sheet 1 of 2)

TOOLS: Putty knife
9/16 in. combination box and open end wrench

SUPPLIES: Adhesive (Item 1, Appendix D)
Insulation

PRELIMINARY PROCEDURES: Remove top deck assembly (page 16-21)
Remove transmission shroud (page 9-2)
Remove engine shroud (page 9-30)

REMOVAL:

1. Using wrench, remove four screws, washers, and lockwashers (A) holding front shroud support (B) to engine (C).

2. Remove shroud support.

3. Using wrench, remove four screws, washers, and lockwashers (D) holding rear shroud support assembly (E) to engine (C).

4. Remove shroud support (E).

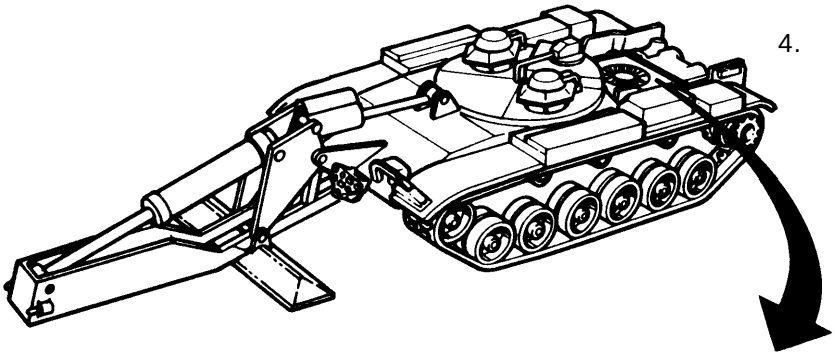

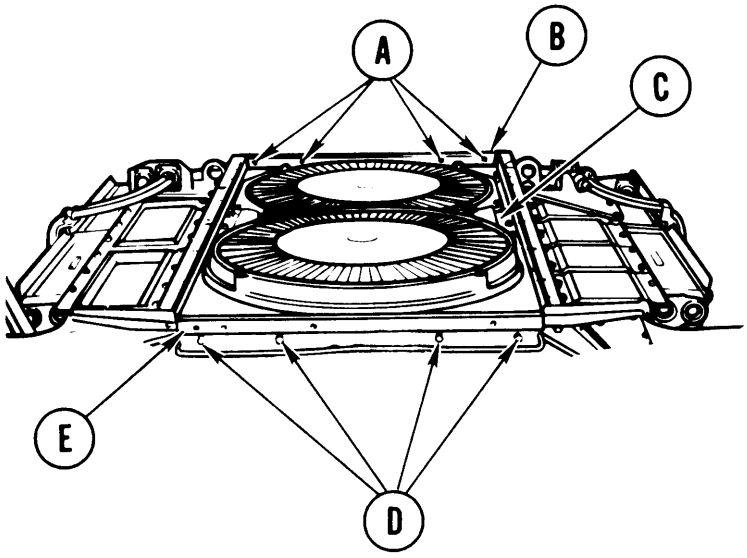

Go on to Sheet 2

TA248503

ENGINE SHROUD SUPPORT REPLACEMENT (Sheet 2 of 2)

CLEANING AND INSPECTION:

1. Inspect support (A) and (B) insulation for wear, tears, or loose areas.

2. If required, use putty knife to remove insulation from shroud supports.

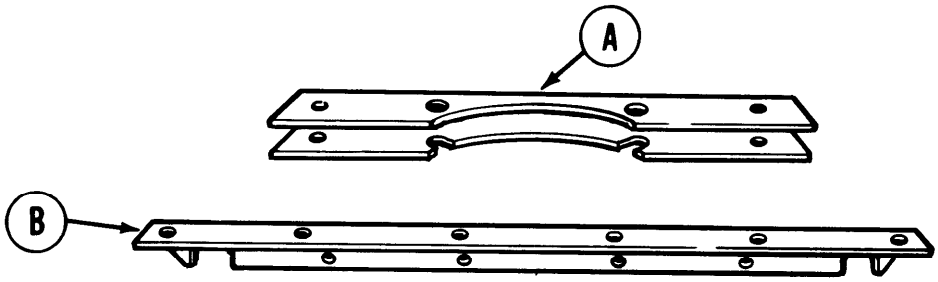

INSTALLATION:

1. If required, use putty knife to apply adhesive to shroud supports. Install new insulation.

2. Position front support (A) onto engine (B). Using wrench, install four washers, lockwashers, and screws (C) to secure support (A) to engine (B).

3. Position rear support (D) onto engine (B). Using wrench, install four washers, lockwashers, and screws (E) to secure support (D) to engine (B).

4. Install engine shroud (page 9-31).

5. Install transmission shroud (page 9-6).

6. Install top deck assembly (page 16-23).

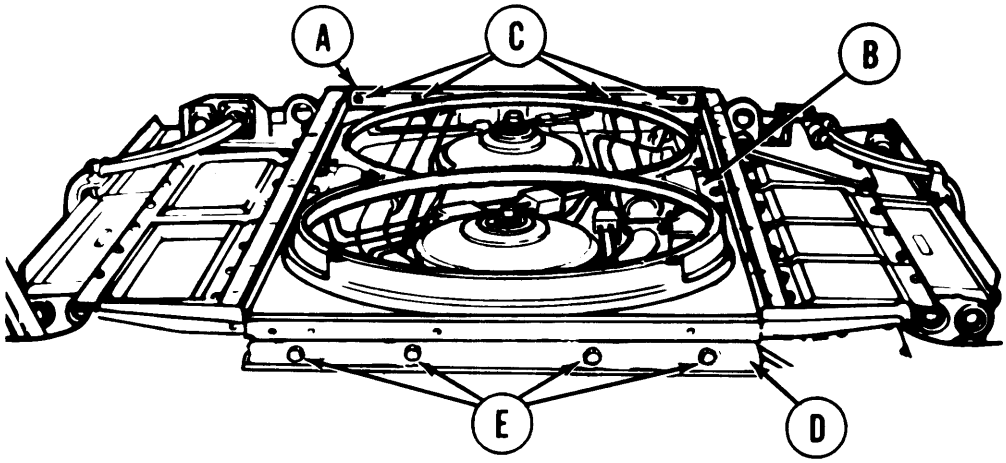

End of Task

TA248504

TURBOCHARGER SHROUDS REPLACEMENT (Sheet 1 of 5)

PROCEDURE INDEX

PROCEDURE	PAGE
Inner Shroud Replacement	9-41
Outer Shroud Replacement	9-45
Upper Shroud Replacement	9-46

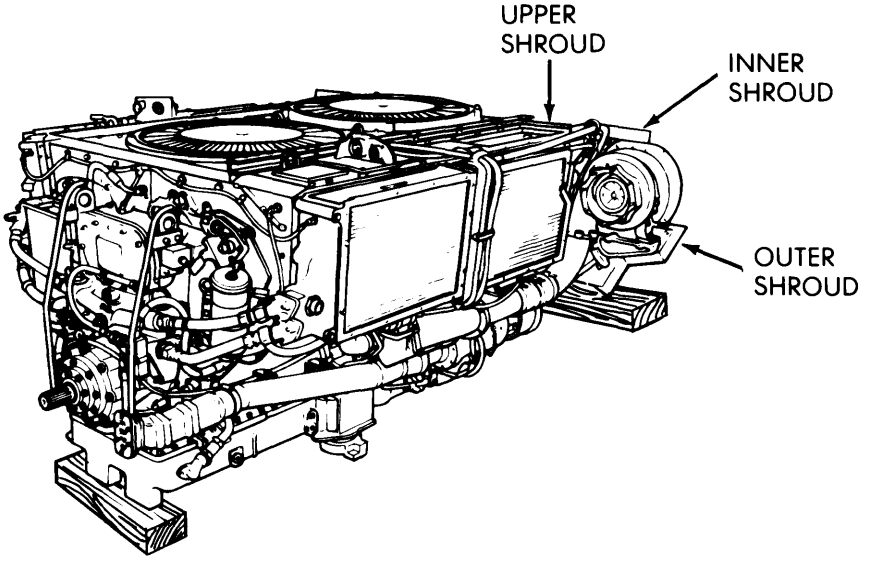

Inner Shroud Replacement (Sheet 1 of 3)

PROCEDURE	PAGE
Removal	941
Installation	9-43

TOOLS: 11/16 in. combination box and open end wrench
1/2 in. combination box and open end wrench
1/2 in. socket with 1/2 in. drive
5 in. extension with 1/2 in. drive
Ratchet with 1/2 in. drive

PRELIMINARY PROCEDURES: Remove powerplant (page 5-2)
Remove rear engine shroud support (page 9-39)
Remove transmission oil cooler lines (page 6-64 or 6-68)

Go on to Sheet 2

TA248505

TURBOCHARGER SHROUDS REPLACEMENT (Sheet 2 of 5)
Inner Shroud Replacement (Sheet 2 of 3)

NOTE

Procedures for replacement of the left or right transmission shrouds are similar. Procedures for the left side are shown.

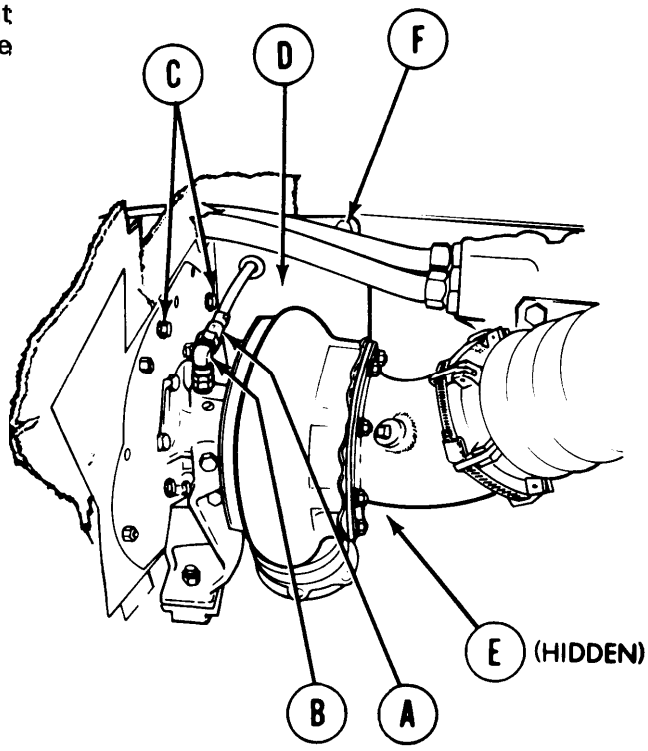

REMOVAL:

1. Using 11/16 inch wrench, disconnect hose assembly (A) from turbocharger elbow (B).

2. Using 1/2 inch socket, remove two screws and washers (C) securing inner shroud (D) to turbocharger plate.

3. Using 1/2 inch socket, remove two screws and washers (E) securing inner shroud (D) to turbocharger plate.

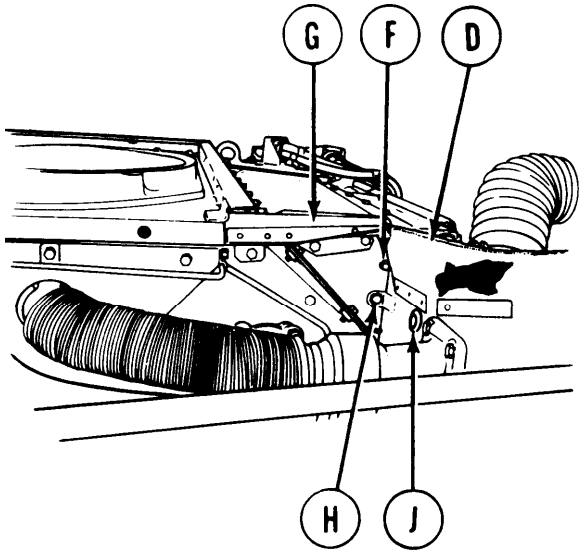

4. Using 1/2 inch wrench and 1/2 inch socket, remove screw, lockwasher, and nut (F) securing inner shroud (D) to upper shroud (G).

5. Using 1/2 inch socket and extension, remove three screws and washers (H) securing inner shroud (D) to oil cooler frame.

6. Remove hose assembly (A) and grommet (J) from inner shroud (D).

8. Remove inner shroud (D).

7. Remove grommet (J) from hose assembly (A).

Go on to Sheet 3

TA248506

TURBOCHARGER SHROUDS REPLACEMENT (Sheet 3 of 5)
Inner Shroud Replacement (Sheet 3 of 3)

INSTALLATION:

1. Place inner shroud (A) into position.

2. Install grommet (B) on hose assembly (C).

3. Install grommet (B) and hose assembly (C) in inner shroud (A).

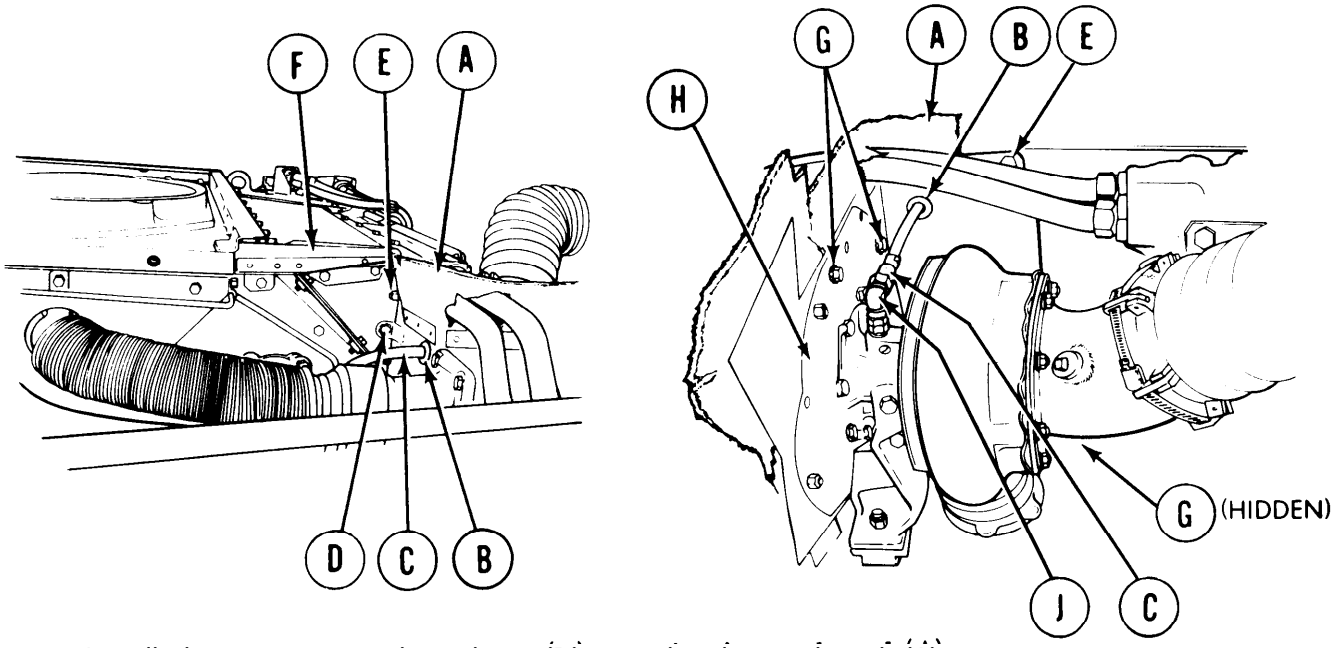

4. Install three screws and washers (D) securing inner shroud (A) to oil cooler frame.

5. Install screw, lockwasher, and nut (E) to secure inner shroud (A) to upper shroud (F).

6. Install four screws and washers (G) securing inner shroud (A) to turbocharger plate (H).

7. Using 1/2 inch socket, tighten four screws (G).

8. Using 1/2 inch socket with extension, tighten three screws (D).

9. Using 1/2 inch socket and 1/2 inch wrench, tight en screw and nut (E).

10. Connect hose assembly (C) to elbow (J). Using 11/16 inch wrench, tighten hose assembly (C) onto elbow (J).

TA248507

Go on to Sheet 4

TURBOCHARGER SHROUDS REPLACEMENT (Sheet 4 of 6)
Inner Shroud Replacement (Sheet 4 of 4).

11. Install transmission oil cooler lines (page 6-66 or 6-70).
12. Ground hop engine (page 5-25) and check for oil leaks.
13. Install rear engine shroud support (page 9-39).
14. Disconnect engine from powerplant test run hookup (page 5-40).
15. Install powerplant (page 5-14).

End of Task

TURBOCHARGER SHROUDS REPLACEMENT (Sheet 4 of 5)

Outer Shroud Replacement (Sheet 1 of 1)

TOOLS: 1/2 in. combination box and open end wrench
1/2 in. socket with 1/2 in. drive
Ratchet with 1/2 in. drive

PRELIMINARY PROCEDURE: Remove powerplant (page 5-2)

REMOVAL:

NOTE

Procedures for replacement of the left or right transmission shrouds are similar. Procedures for the left side are shown.

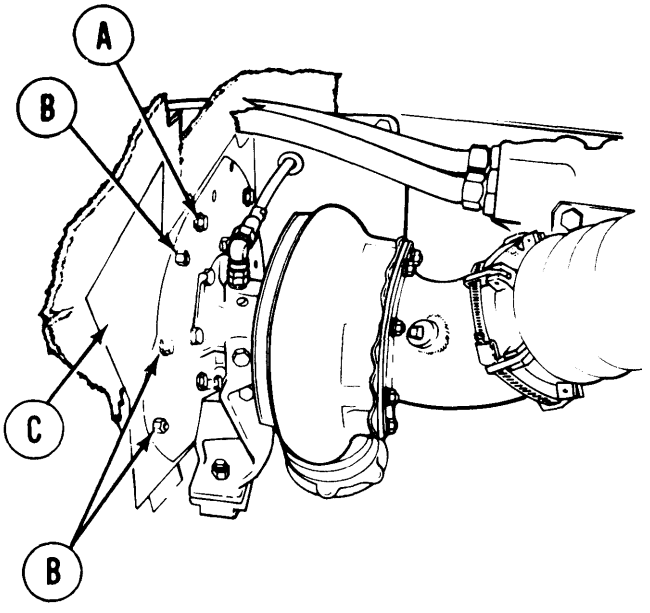

1. Using 1/2 inch socket, remove screw and lockwasher (A).
2. Using 1/2 inch socket and 1/2 inch wrench, remove three screws, lockwashers, and nuts (B) securing outer shroud (C).
3. Remove outer shroud (C).

INSTALLATION:

1. Position outer shroud (C) to turbocharger.
2. Install three screws, lockwashers, and nuts (-B) to secure outer shroud (C) to turbocharger.
3. Install screw and washer (A) to secure outer shroud (C) to turbocharger.
4. Using 1/2 inch socket and 1/2 inch wrench, tighten screws (A and B).
5. Install powerplant (page 5-14).

End of Task

TA248508

TURBOCHARGER SHROUDS REPLACEMENT (Sheet 5 of 5)

Upper Shroud Replacement (Sheet 1 of 1)

TOOLS: 1/2 in. combination box and open end wrench
1/2 in. socket with 1/2 in. drive
5 in. extension with 1/2 in. drive
Ratchet with 1/2 in. drive

PRELIMINARY PROCEDURES: Remove powerplant (page 5-2).
Remove rear engine shroud support (page 9-39).

NOTE

Procedures for replacement of the left or right transmission shrouds are similar. Procedures for the left side are shown.

REMOVAL:

1. Using 1/2 inch socket with extension and 1/2 inch wrench, remove screw, lockwasher, and nut (A).

2* Using 1/2 inch socket with extension, remove three screws and lockwashers (B).

3. Remove upper shroud (C).

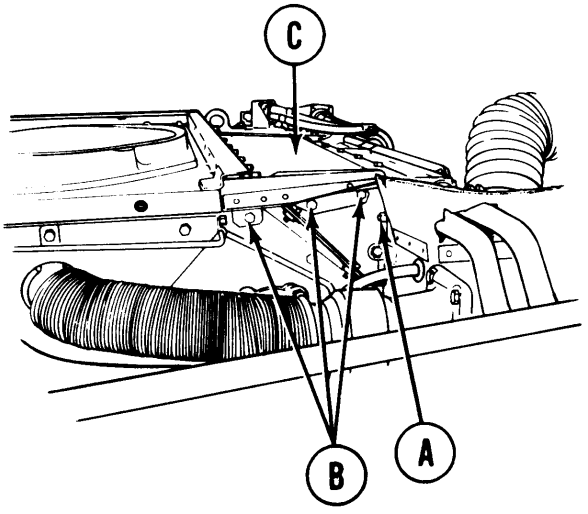

INSTALLATION:

1. Position upper shroud (C) in place.

2. Install three screws and washers (B).

3. Install screw, lockwasher, and nut (A).

4. Using 1/2 inch socket with extension and 1/2 inch wrench, tighten screws (A and B).

5. Install rear engine shroud support (page 9-40).

6. Install powerplant (page 5-14).

End of Task

TA248509

COOLING FAN SHROUD REPLACEMENT (Sheet 1 of 8)

PROCEDURE INDEX

PROCEDURE	PAGE
Removal	9-47
Installation	9-51

TOOLS: 9/16 in. combination box and open end wrench (2 required)
Slip joint pliers
9/16 in. socket with 1/2 in. drive
1/2 in. socket with 1/2 in. drive
3 in. extension with 1/2 in. drive
Ratchet with 1/2 in. drive
Thickness gage (feeler gage)
1-1/4 in. socket with 1/2 in. drive
1/2 in. combination box and open end wrench
Torque wrench with 1/2 in. drive (0-175 lb-ft) (0-237 NŽm)

SUPPLIES: Cotter pin

PRELIMINARY PROCEDURES: Remove powerplant (page 5-2).
Remove engine shroud (page 9-30).
Remove front and rear shroud supports (page 9-39).

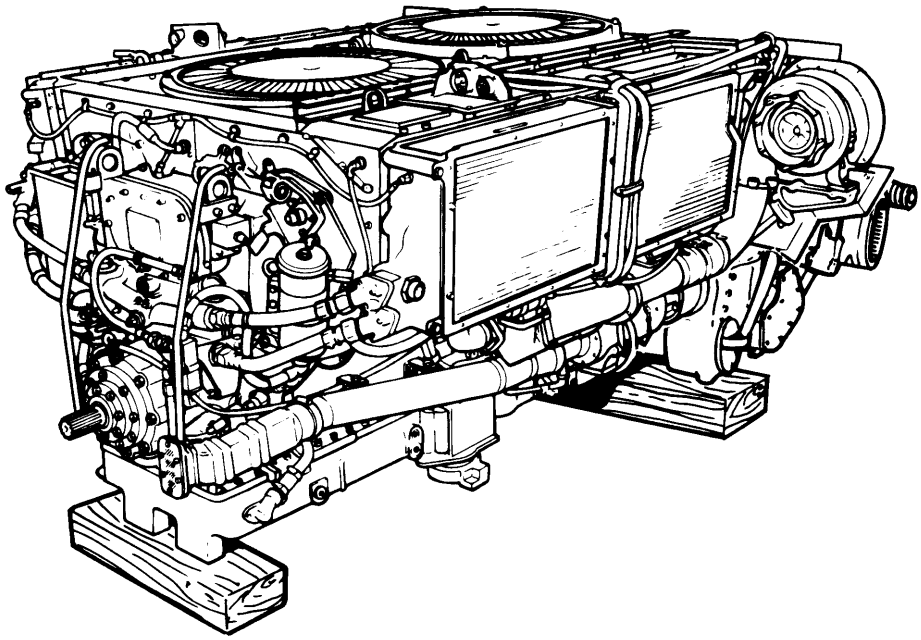

Go on to Sheet 2

TA248510

COOLING FAN SHROUD REPLACEMENT (Sheet 2 of 8)

REMOVAL:

1. Using 1/2 inch socket and extension, remove ten bolts (A) securing two cover plates (B).

2. Remove two cover plates (B).

3. Using 9/16 inch socket, remove eight bolts and washers (C) Securing fan guards to shroud (D).

4. Remove fan guards (E) from shroud (D).

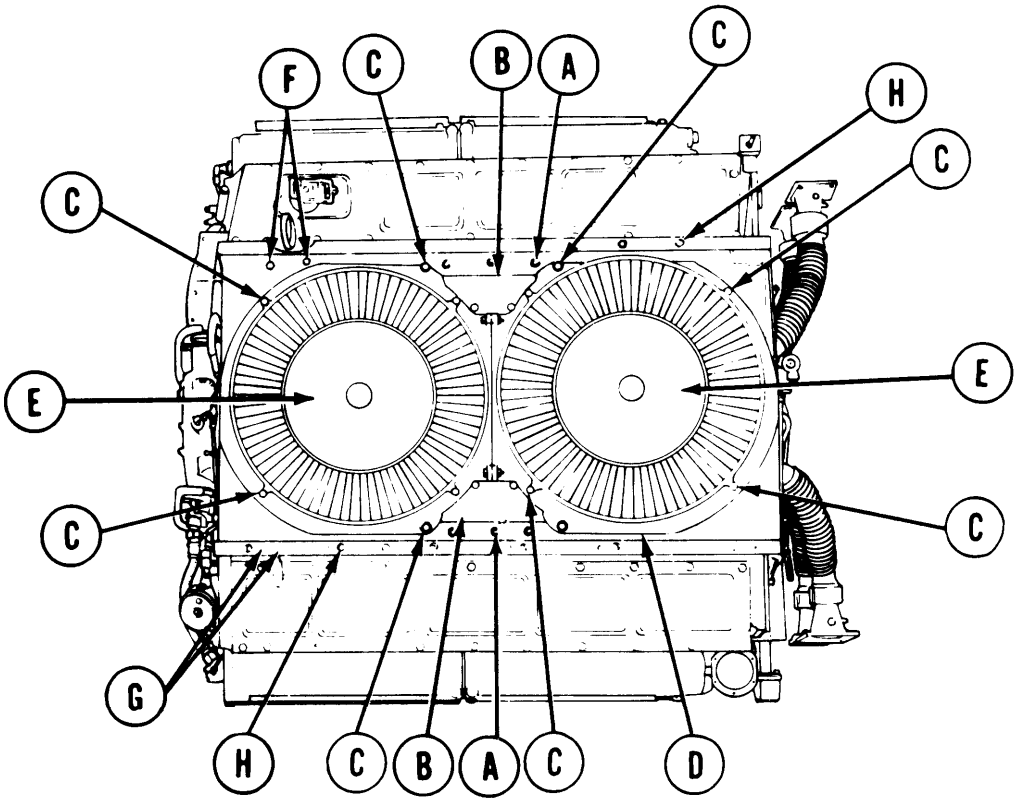

5. Using 1/2 inch socket, remove two bolts (F).

NOTE

To gain access to bolts (G) and nuts (H) reach through holes in shroud rails.

6. Using 1/2 inch socket, remove two bolts (G).

7. Using 1/2 inch socket, remove 12 nuts (H).

Go on to Sheet 3

TA248511

COOLING FAN SHROUD Replacement (Sheet 3 of 8)

8. Using pliers, remove cotter pins (J) from nuts (K) from each fan (L).

9. Using 1-1/4 inch socket, remove nut and washer (K) securing each fan (L) to engine.

10. Lift fans (L) from engine.

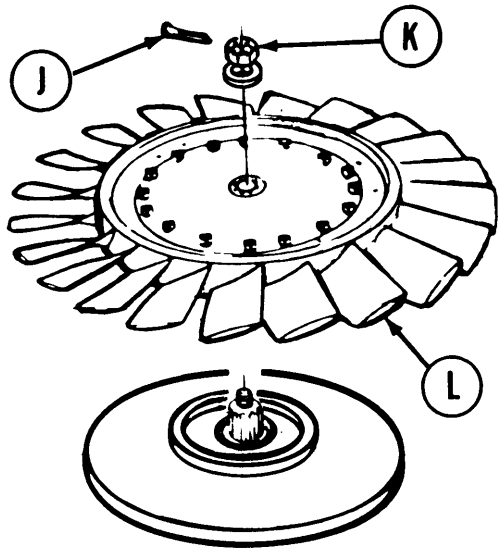

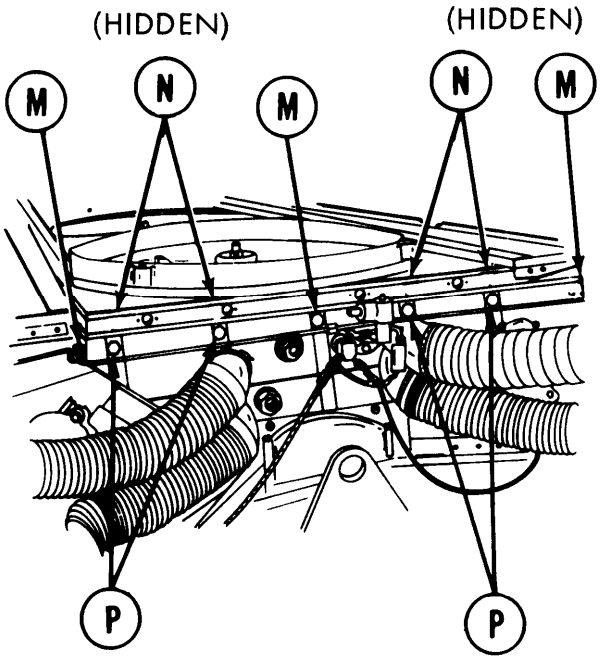

NOTE

Four nuts (N) are located under fan shroud and hold fuel line clamps. When nut (N) and screws (P) are removed, clamps will remain on fuel line.

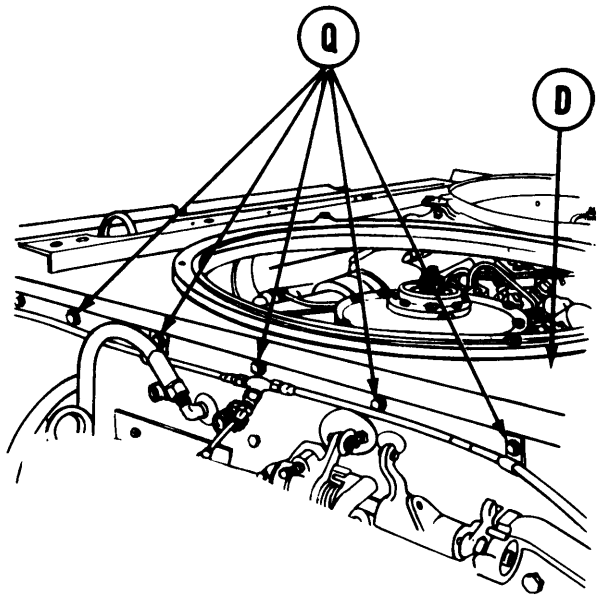

11. Using 1/2 inch socket, remove three screws (M).

12. Using 1/2 inch wrench to hold nuts (N), use 1/2 inch socket and remove four screws (P) and nuts (N).

13. Using 1/2 inch socket, remove five screws (Q) securing shroud (D) to engine.

FRONT OF ENGINE

Go on to Sheet 4

TA248512

COOLING FAN SHROUD REPLACEMENT (Sheet 4 of 8)

14. Using two 9/16 inch wrenches, remove two screws, washers, and nuts (R) from fan housing (s).

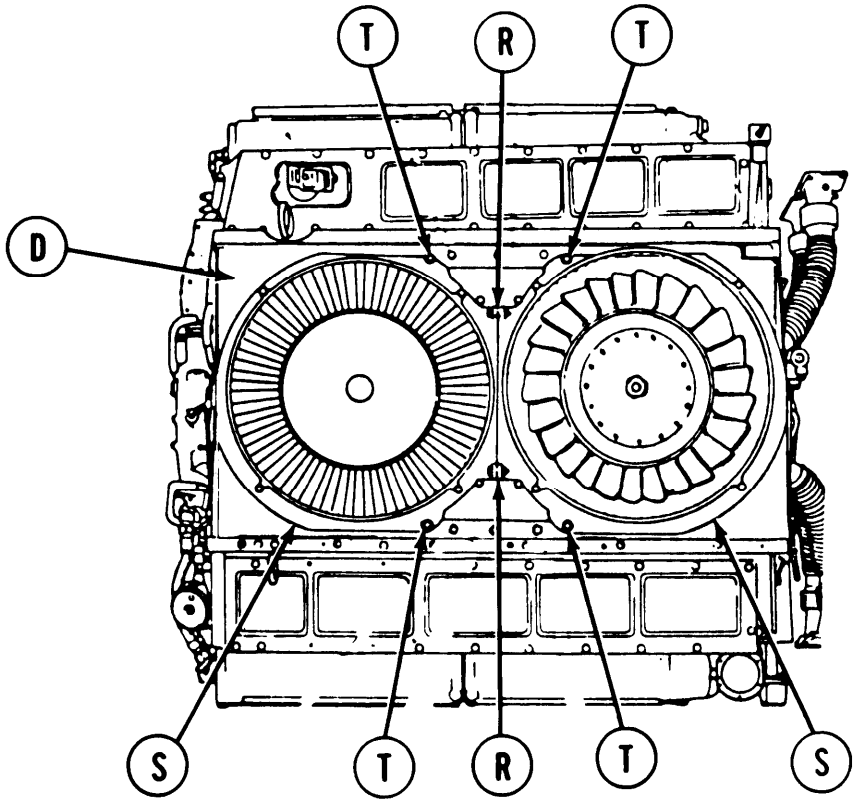

15. Using 9/16 inch socket, remove four screws and washers (T) from fan housing (S).

16. Using hands, lift two pieces of fan housing (S) from powerplant.

17. Using hands, lift shroud (D) from powerplant.

Go on to sheet 5

TA248513

COOLING FAN SHROUD REPLACEMENT (Sheet 5 of 8)

INSTALLATION:

1. Position cooling fan shroud (A) on engine.

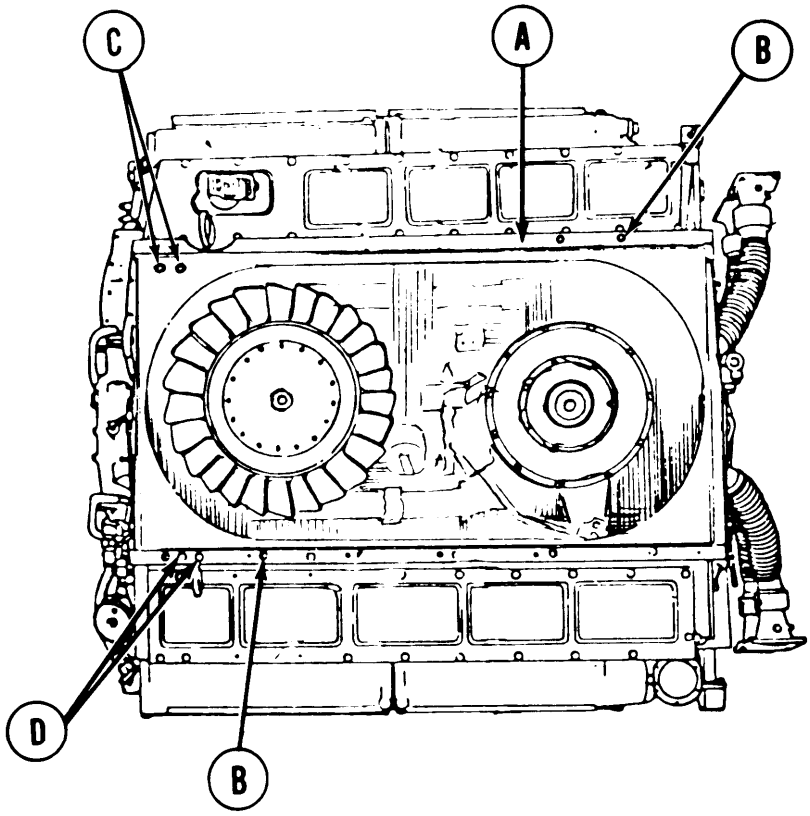

2. Using 1/2 inch socket, install 12 nuts (B).
3. Using 1/2 inch socket, install two bolts (C).
4. Using 1/2 inch socket, install two bolts (D).

Go on to Sheet 6

TA248514

COOLING FAN SHROUD REPLACEMENT (Sheet 6 of 8)

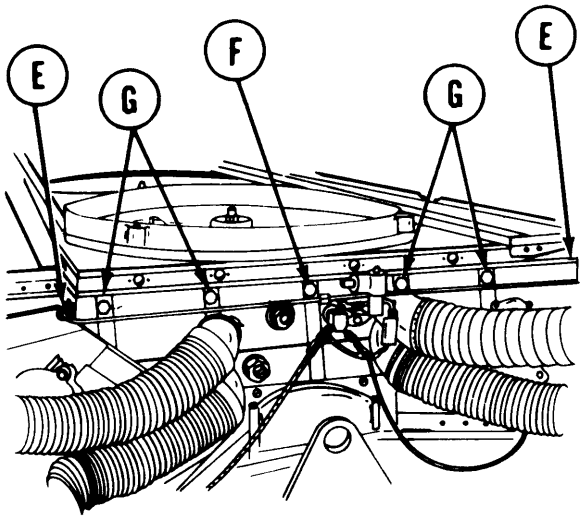

REAR OF ENGINE

5. Using 1/2 inch socket, install two screws (E) securing shroud and fuel line clamps to engine.

6. Using 1/2 inch socket, install one screw (F) securing shroud to engine.

7. Using 1/2 inch socket, install four screws (G) securing shroud to engine.

8. Position clamps on fuel line, located on underside of shroud, onto screws (G). Using 1/2 inch wrench, install four nuts onto screws (G) securing fuel line clamp.

9. Using 1/2 inch socket, install five screws (H) securing clamps and engine shrouds to fan shrouds.

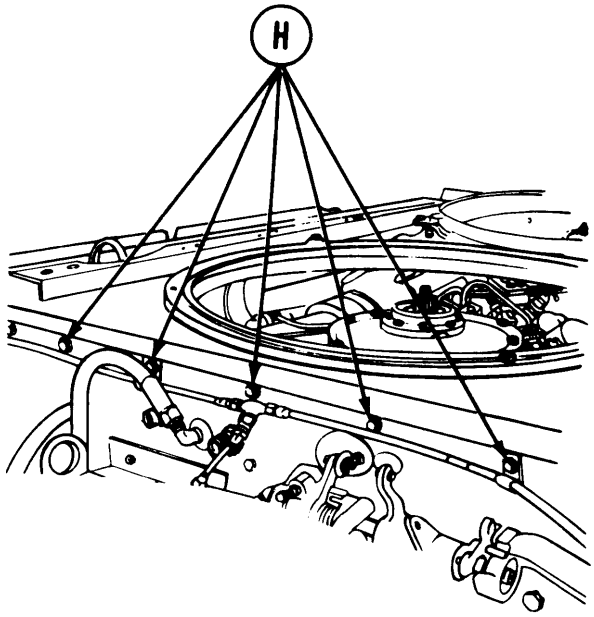

FRONT OF ENGINE

Go on to Sheet 7

TA248515

COOLING FAN SHROUD REPLACEMENT (Sheet 7 of 8)

10. Position two pieces of fan housing (J) onto powerplant.

11. Using two 9/16 inch wrenches, install two screws, washers, and nuts (K) securing two pieces of fan housing (J) together.

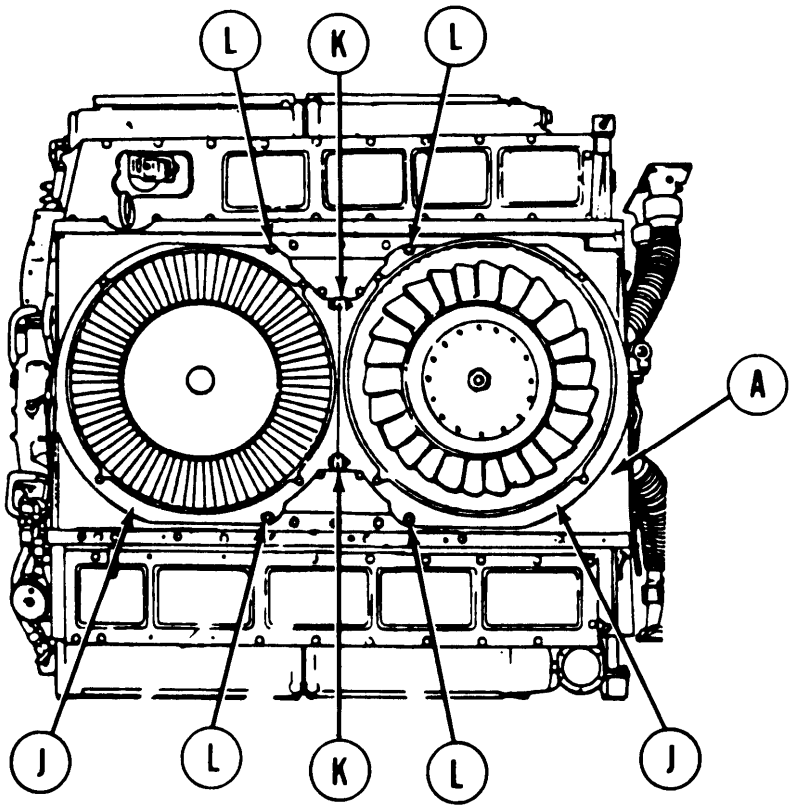

12. Using 9/16 inch socket, install four screws and washers (L) securing fan housing (J) to fan shroud (A).

13. Using hands, position two fans (M) onto engine.

14. Using 1-1/4 inch socket, install on each fan washer (N) and nut (P) securing fans (M) to engine.

15. Using 1-1/4 inch socket and torque wrench, tighten nuts (P) to 50-55 lb-ft (68-75 NŽm).

16. Back nuts (P) off until slot in nut (P) alines with hole in shaft. Using pliers, install cotter pins (Q).

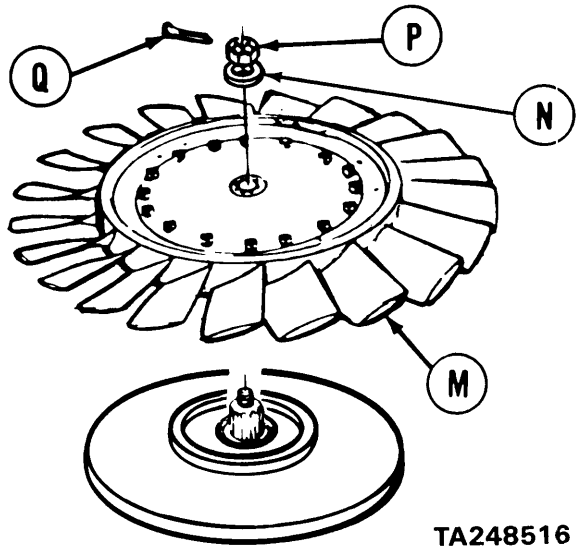

Go on to Sheet 8

COOLING FAN SHROUD REPLACEMENT (Sheet 8 of 8)

17. Using thickness gage, check clearance between tip of each fan blade and fan housing (J). If clearance is less than 0.062 inch (0.157 mm) all around, loosen screws (L) and shift fan housing (J) as necessary to attain clearance.

18. When clearance is attained, use 9/16 inch socket and tighten screws (L).

19. Position two fan guards (R) onto fan housing (J).

20. Install eight bolts and washers (S) to secure fan guards (R) to fan housing (J).

21. Using 9/16 inch socket, tighten bolts (S).

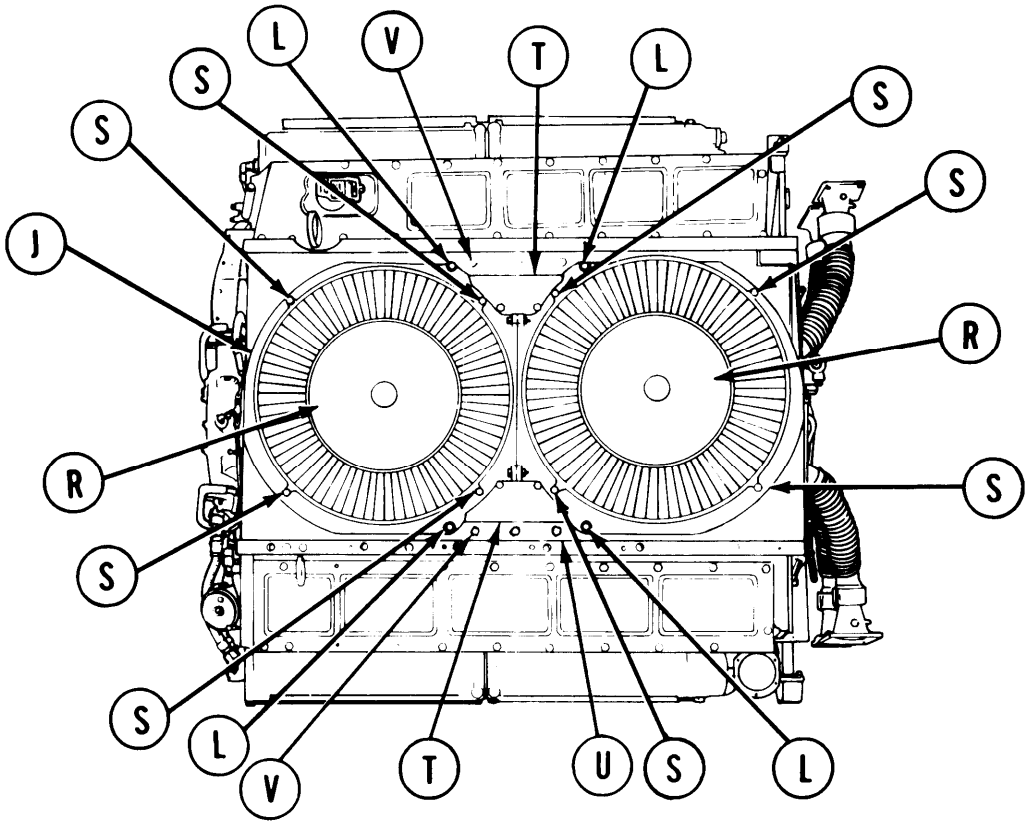

22. Position two cover plates (T) onto shroud (U).

23. Using 1/2 inch socket, install five bolts (V) to secure each cover plate (T).

24. Install front and rear shroud supports (page 9-40).

25. Install engine shroud (page 9-31).

26. Install powerplant (page 5-14).

End of Task

TA248517

ENGINE COOLING FAN REPLACEMENT (Sheet 1 of 4)

PROCEDURE INDEX

PROCEDURE	PAGE
Removal	9-55
Installation	9-57

TOOLS: Thickness gage (feeler gage)
Torque wrench (0-175 lb-ft)
Ratchet with 1/2 in. drive
9/16 in. socket with 1/2 in. drive
1/2 in. socket with 1/2 in. drive
1/2 in. combination box and open end wrench
Slip joint pliers
Hammer
1-1/4 in. socket with 1/2 in. drive

SUPPLIES: Cotter pin MS24665-359
Cotter pins TR50-80 (16 required)
2 x 4 in. block of wood 6 in. long

PRELIMINARY PROCEDURE: Remove top deck (page 16-21)

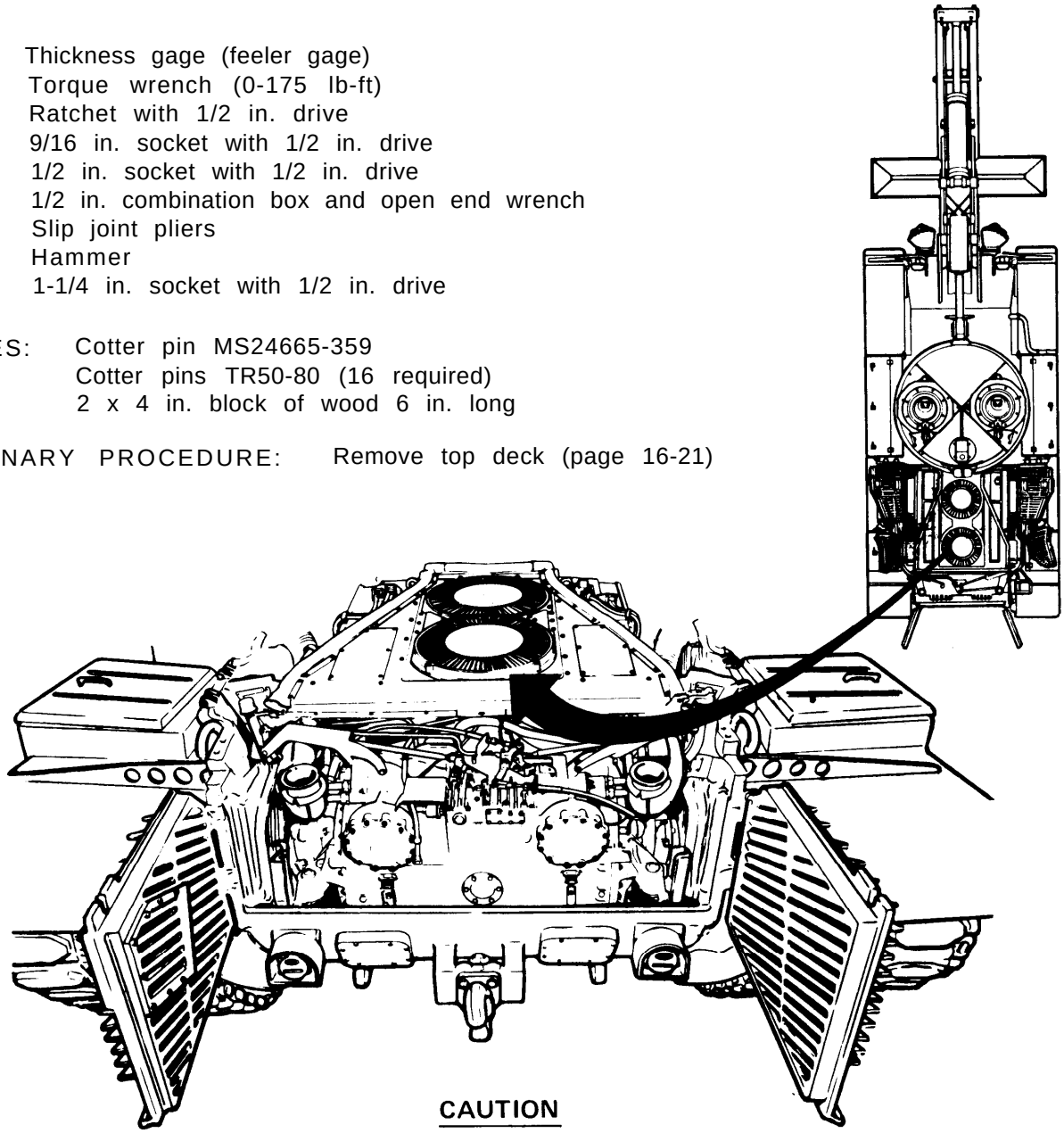

CAUTION

Do not drop screws and lockwashers into fan assembly.

TA248518

Go on to Sheet 2

ENGINE COOLING FAN REPLACEMENT (Sheet 2 of 4)

NOTE

Both engine cooling fans are replaced the same.

REMOVAL:

1. Using 9/16 inch socket, remove four screws and lockwashers (A) holding fan cover (B) to engine.

2. Remove fan cover (B).

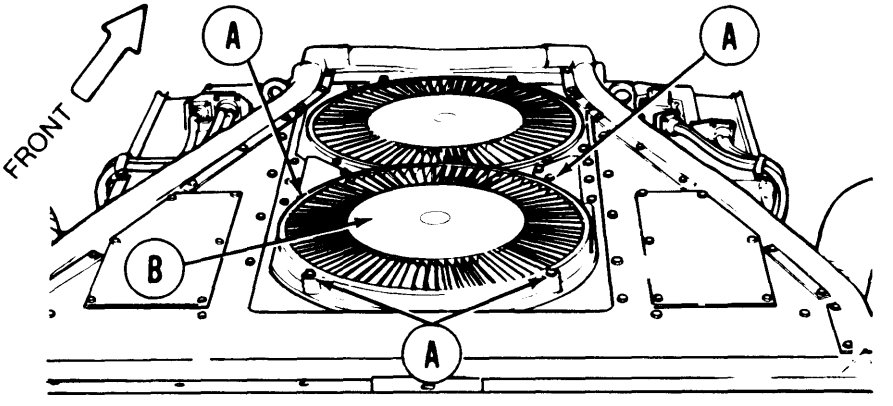

3. Using slip joint pliers remove cotter pin (C).

4. Using 1-1/4 inch socket, remove hex nut and flat washer (D) holding fan to shaft (E).

5. Remove assembled fan and hub (D) from shaft (E).

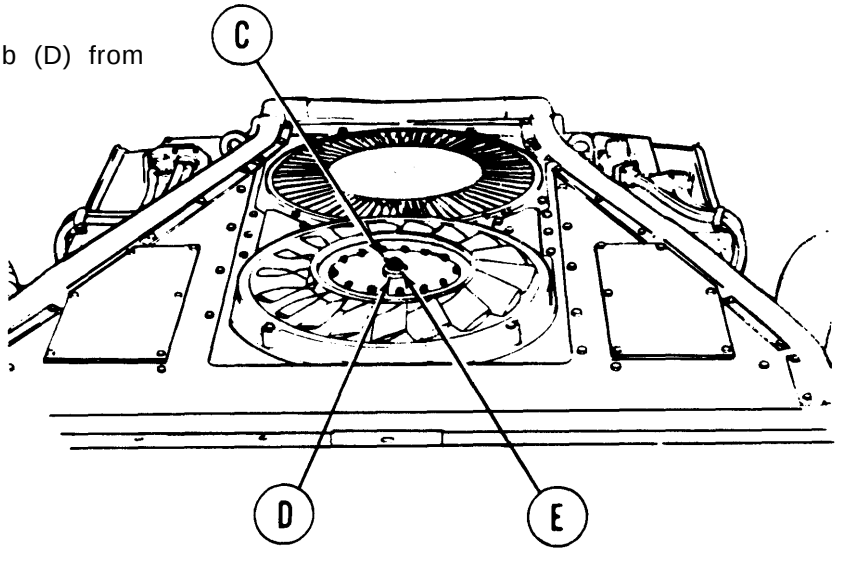

TA248519

Go on to Sheet 3

ENGINE COOLING FAN REPLACEMENT (Sheet 3 of 4)

6. Using slip joint pliers, remove 16 cotter pins (G).

7. Using 1/2 inch socket and open end wrench, remove 16 nuts, bolts, and washers (H) holding fan (J) to hub (K).

8. Place block of wood on hub (K). Using hammer, strike block of wood until hub (K) is separated from fan (J).

9. Inspect hub (K) for damages. Replace hub if damaged.

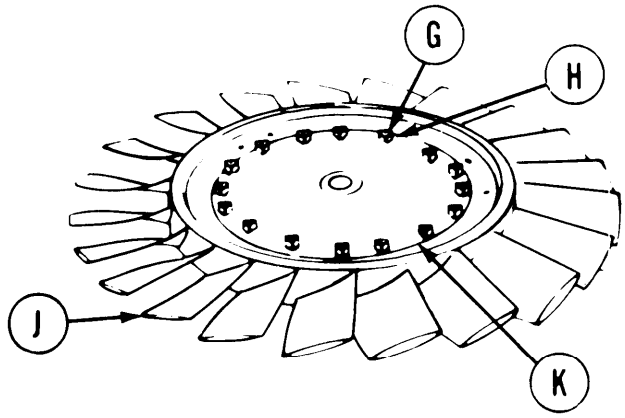

INSTALLATION:

1. Position hub (A) on fan (B) machined surface up (marked top).

2. Using 1/2 inch socket and open end wrench, install 16 bolts, nuts, and washers (C). Using torque wrench, torque nuts to 15-20 lb-ft (20-27 NŽm).

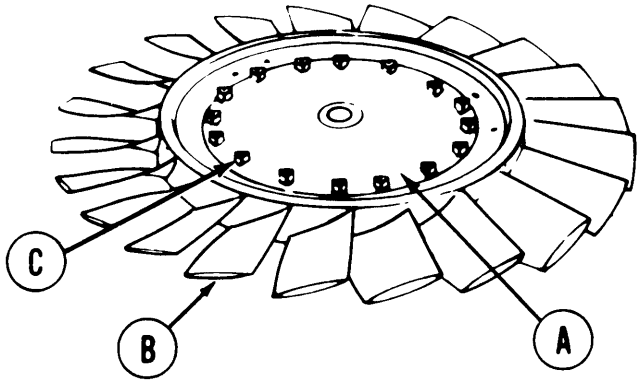

3. Using slip joint pliers, install 16 new cotter pins (D).

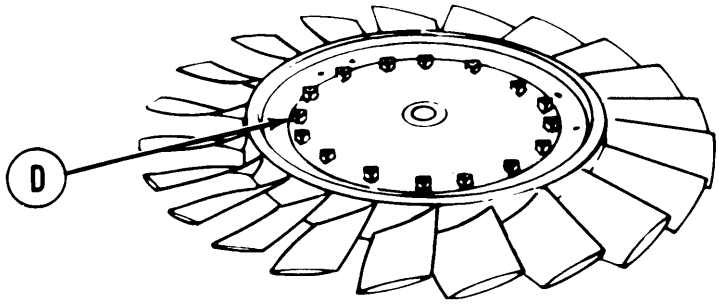

Go on to Sheet 4

TA248520

ENGINE COOLING FAN REPLACEMENT (Sheet 4 of 4)

4. Install assembled fan and hub on shaft (E).

5. Using 1-1/4 inch socket, install washer and hex nut (F). Using torque wrench, tighten nut from 45-55 lb-ft (61-75 NŽm).

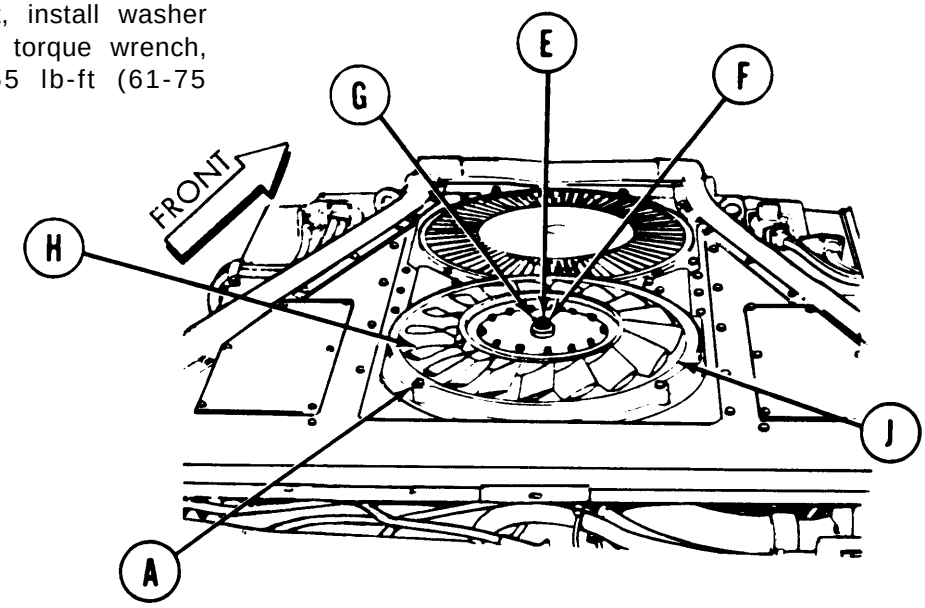

6. Using feeler gage, check clearance between fan (H) and housing (J). If clearance is less than 0.062 inch all around, loosen four screws (A) and shift housing (J) until clearance is obtained.

7. Using torque wrench, turn nut (F) clockwise and check that clutch releases (fan turns) between 18-22 lb-ft (25-30 NŽm). If clutch does not release between 18-22 lb-ft (25-30 NŽm), notify support maintenance.

8. Using slip joint pliers, install cotter pin (G).

9. Position fan cover (K) over fans.

10. Using 9/16 inch socket, install four screws and lockwashers (L).

11. Install top deck (page 16-23).

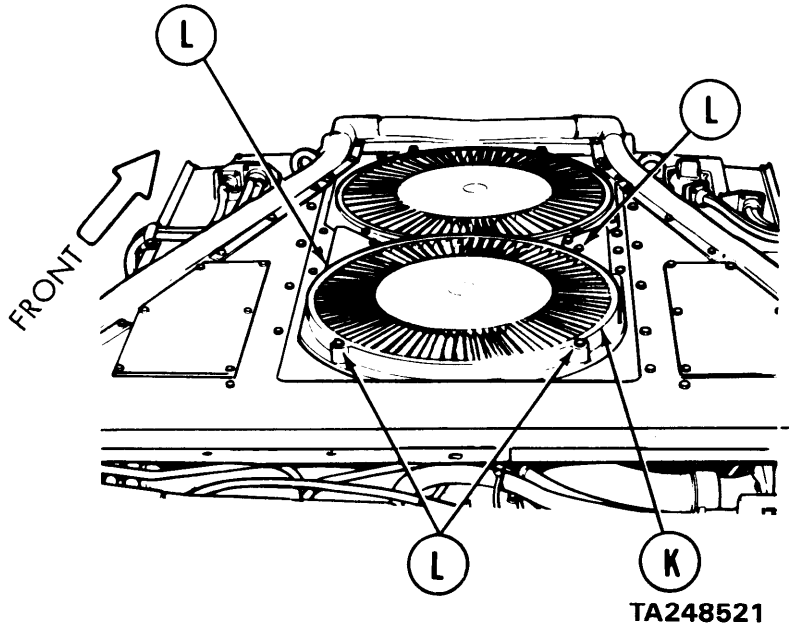

End of Task

FAN DRIVE OIL SEAL REPLACEMENT (Sheet 1 of 5)

PROCEDURE INDEX

PROCEDURE	PAGE
Removal	9-59
Installation	9-61

TOOLS: Ratchet with 1/2 in. drive
Putty knife
Diagonal cutters
Slip joint pliers
Hammer
1/2 in. socket with 1/2 in. drive
Brass drift

SPECIAL TOOLS: Puller (2 ea) (Item 1, Chapter 3, Section 1)

SUPPLIES: Sealing compound (Item 24, Appendix D)
Seal
Lockwire (Item 61, Appendix D)
Dry cleaning solvent (Item 55, Appendix D)
Rags (Item 65, Appendix D)
Watch
Gloves (Item 69, Appendix D)
Goggles (Item 70, Appendix D)

PRELIMINARY PROCEDURE: Remove cooling fans (page 9-55).

Go on to Sheet 2

TA248522

FAN DRIVE OIL SEAL REPLACEMENT (Sheet 2 of 5)

REMOVAL:

1. Using diagonal cutters, cut and remove lockwire (A).
2. Using socket, remove six bolts (B) and washers (C).

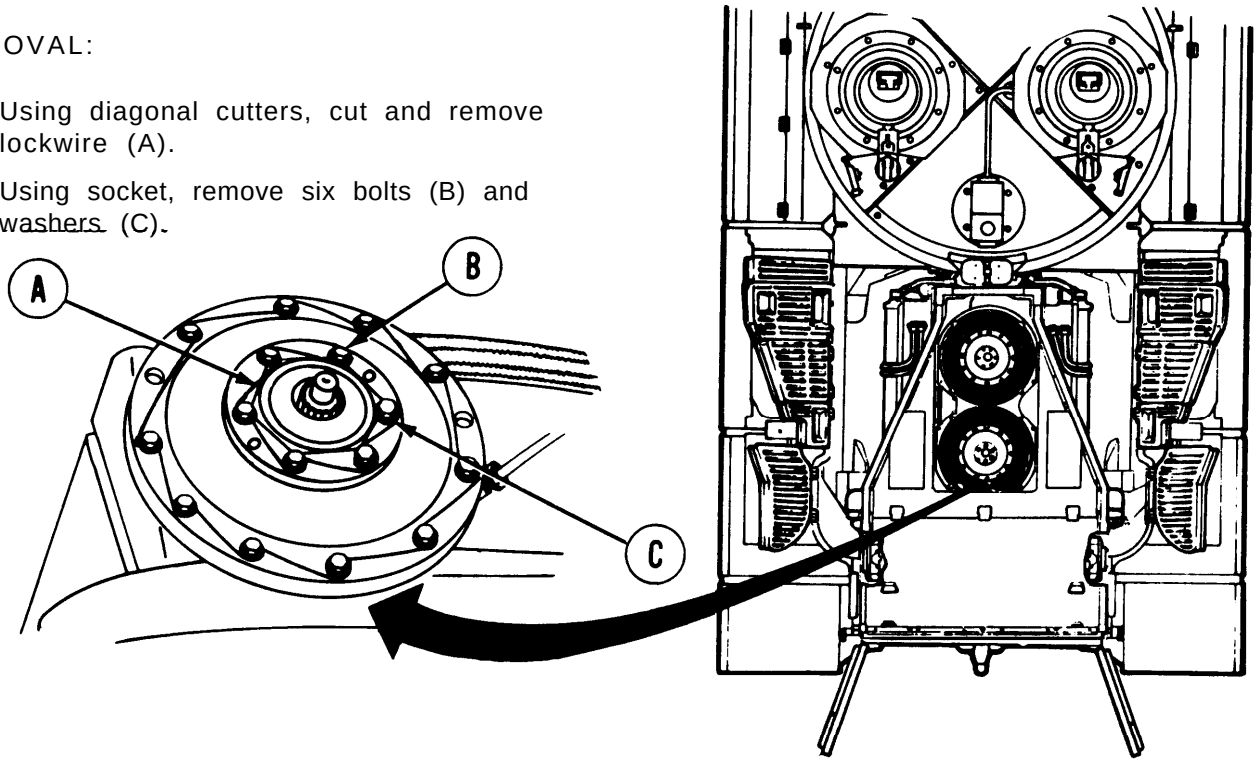

3. Install two pullers (D) in screw holes in oil seal housing (E).
4. Alternately tighten pullers (D) until oil seal housing (E) separates from fan drive housing (F).

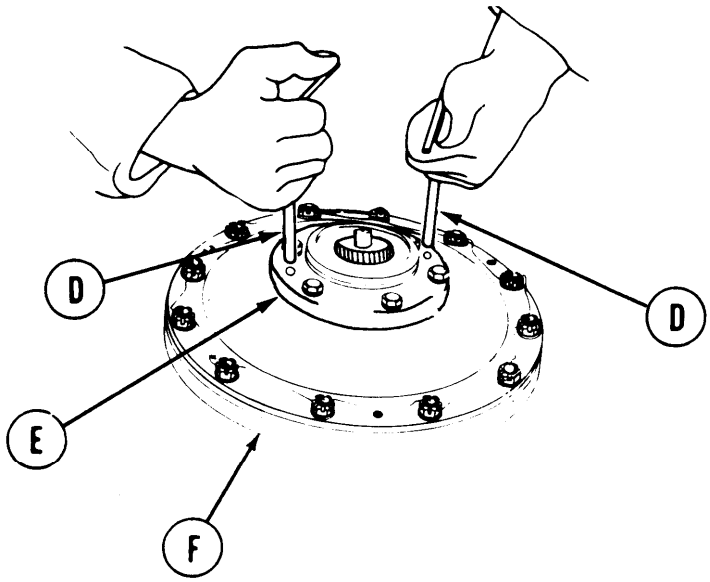

TA248523

Go on to Sheet 3

FAN DRIVE OIL SEAL REPLACEMENT (Sheet 3 of 5)

5. Using hammer and brass drift, drive out oil seal (G) from housing (E) and throw away.

WARNING

Dry cleaning solvent P-D-680 is toxic and flammable. To prevent personal injury, wear protective goggles and gloves and use only m a well-ventilated area. Avoid contact with skin, eyes, and clothes and don't breathe vapors. Do not use near open flame or excessive heat. The flash point for Type #1 Dry Cleaning Solvent is 100°F (38°C) and for Type #2 is 138°F (50°C). If you become dizzy while using cleaning solvent, get fresh air immediately and get medical aid. If contact with eyes is made, wash your eyes with water and get medical aid immediately.

6. Clean housing (E) with dry cleaning solvent and rags and remove any dried adhesive and oil.

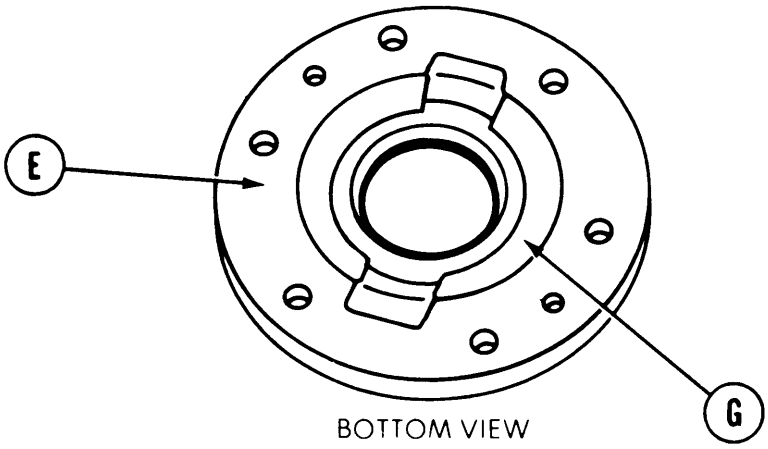

INSTALLATION:

1. Using putty knife, coat sides of replacement oil seal with sealing compound. Use care to prevent sealing compound from contacting felt part of seal.

2. Position new oil seal (A) in housing with lip of seal toward gasket surface of oil seal housing (B).

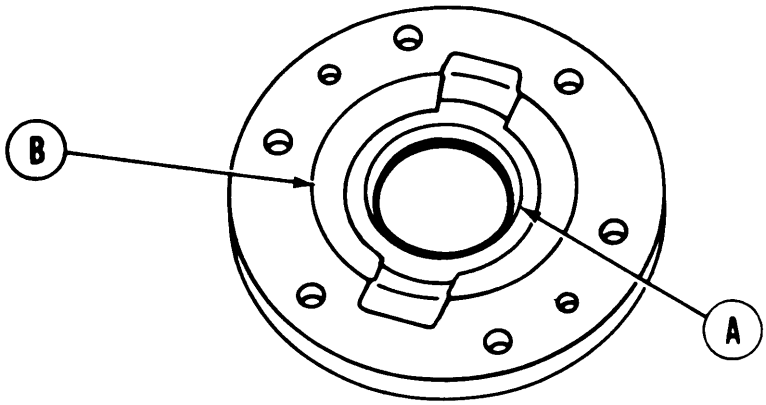

TA248524

Go on to Sheet 4

FAN DRIVE OIL SEAL REPLACEMENT (Sheet 4 of 5)

3. Using hammer and brass drift, drive new seal (A) into housing (B), seating seal. Remove excess sealing compound.

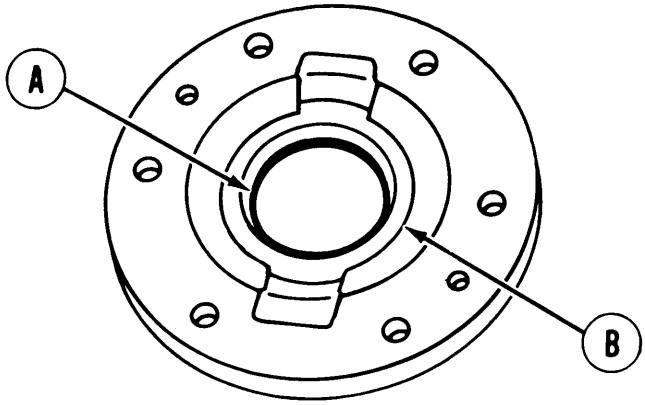

4. Position assembled oil seal housing (B) on fan drive housing (C). Be sure puller holes in housing (B) aline with indents in fan housing (C).

5. Using socket, install six bolts and washers (D).

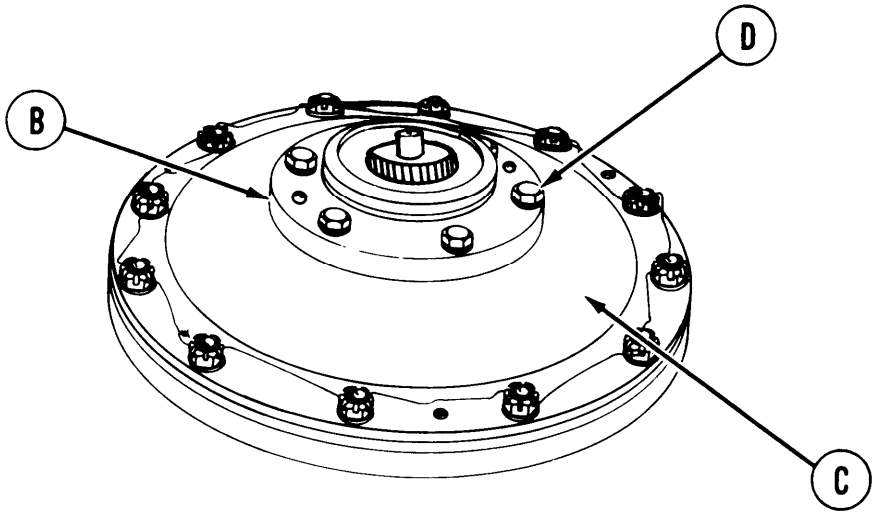

TA248525

Go on to Sheet 5

FAN DRIVE OIL SEAL REPLACEMENT (Sheet 5 of 5)

6. Install cooling fan (page 9-57). Operate engine for five minutes. Stop engine, remove fan and check for oil leaks around seal.

7. Using slip joint pliers, install lockwire (E) through bolt heads.

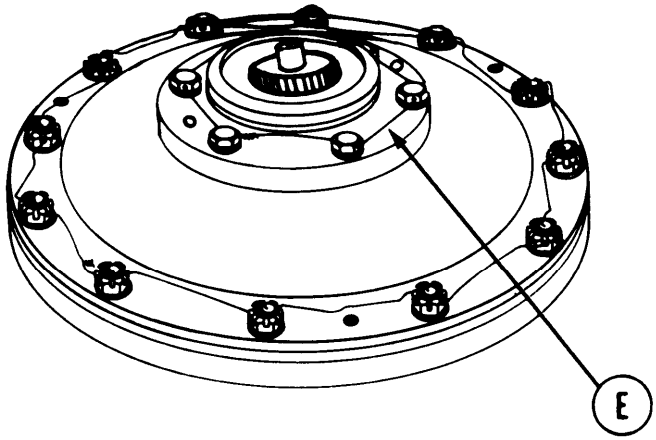

8. Install cooling fans (page 9-57).

End of Task

TA248526

CENTRIFUGAL FAN HOUSING REPLACEMENT (Sheet 1 of 3)

TOOLS: 1/2 in. socket with 1/2 in. drive
9/16 in. socket with 1/2 in. drive
Ratchet with 1/2 in. drive
Thickness gage (feeler gage)
9/16 in. open end wrench (2 required)

PRELIMINARY PROCEDURE: Remove engine shroud (page 9-30)

REMOVAL:

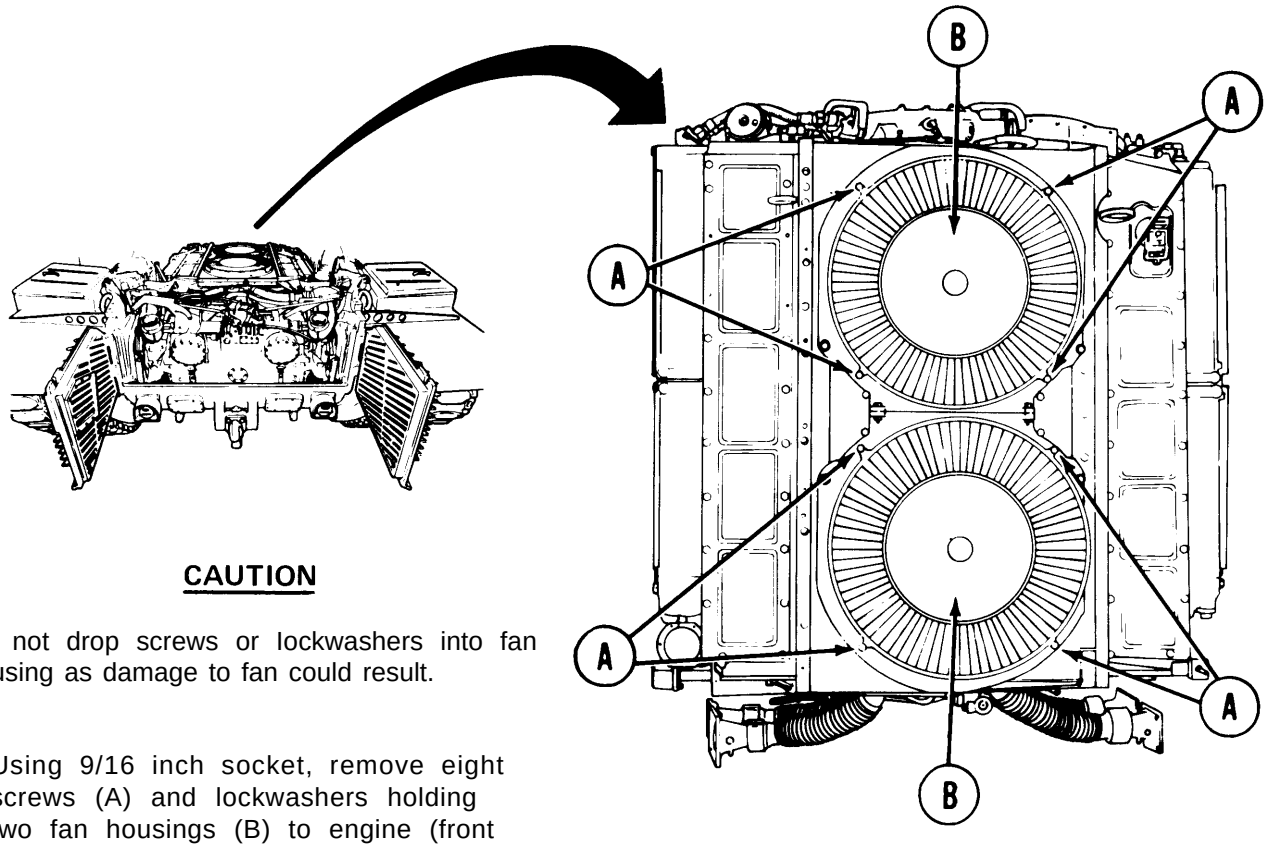

CAUTION

Do not drop screws or lockwashers into fan housing as damage to fan could result.

1. Using 9/16 inch socket, remove eight screws (A) and lockwashers holding two fan housings (B) to engine (front end and flywheel end).

Go on to Sheet 2

TA248527

CENTRIFUGAL FAN HOUSING Replacement (Sheet 2 of 3)

2. Remove fan housings (B) from powerplant.

3. Using 1/2 inch socket, remove ten screws (C) securing covers (D) to shroud (E).

4. Remove covers (D) from powerplant.

5. Using two 9/16 inch wrenches, remove two screws, lockwashers and nuts (F) that hold housing (G) and mount (H) together.

6. Using 9/16 inch socket, remove four screws (J).

7. Remove housing (G) and mount (H) from powerplant.

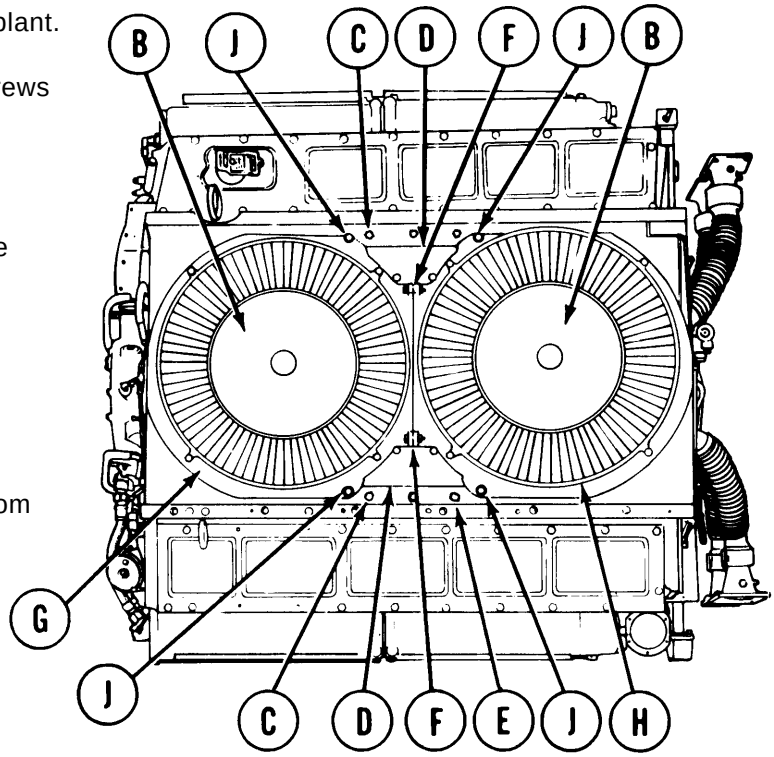

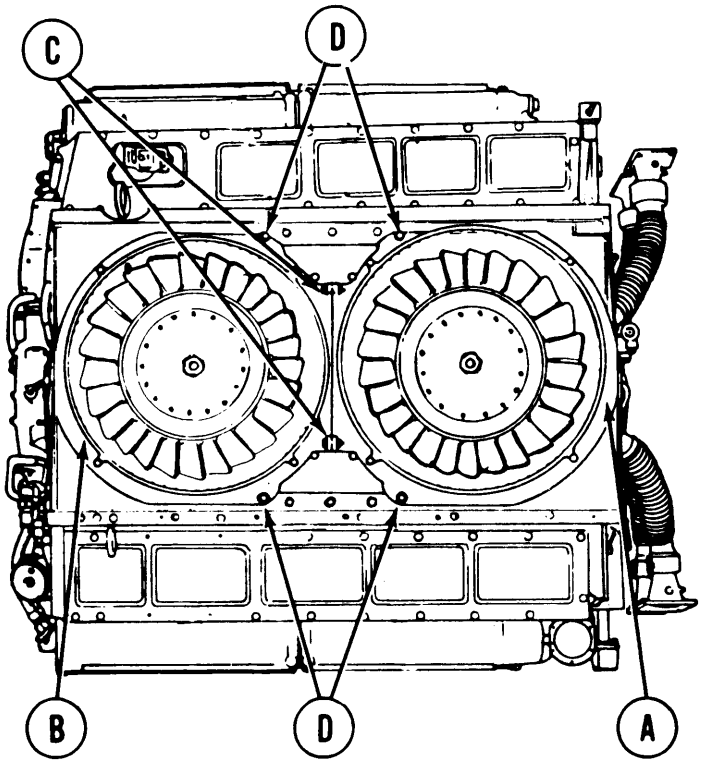

INSTALLATION:

NOTE

Make sure no foreign matter is present in fan housing.

1. Position mount (A) and housing (B) onto powerplant.

2. Using two 9/16 inch wrenches, install two screws, lockwashers, and nuts (C) securing mount (A) and housing (B) together

3. Using 9/16 inch socket, install four screws (D) securing mount (A) and housing (B) to engine shroud.

4. Using feeler gage, check clearance between tip of each fan blade and housing (B). If clearance is less than 0.062 inch, loosen screws (D) and shift housing (B) until clearance is obtained.

TA248528

Go on to Sheet 3

CENTRIFUGAL FAN HOUSING REPLACEMENT (Sheet 3 of 3)

5. Position covers(E) onto shroud(F).

6. Using 1/2 inch socket, install ten screws (G) securing covers (E) to shroud (F).

7. Position fan housings (H) onto powerplant.

8. Using 9/16 inch socket, install eight screws and lockwashers (J) securing two fan housings (H) to powerplant.

9. Install engine shroud (page 9-31).

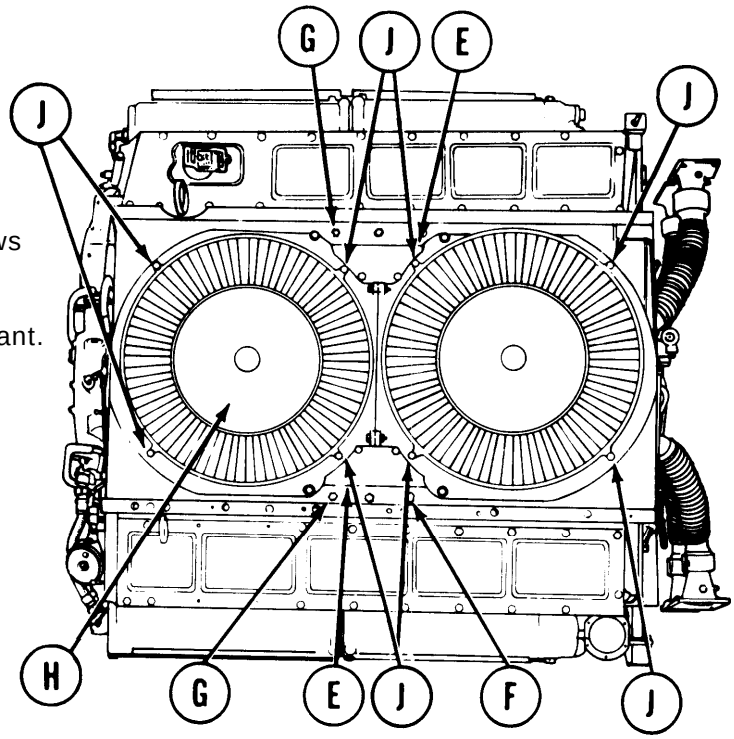

End of Task

TA248529

By Order of the Secretary of the Army:

JOHN A. WICKHAM, JR.
General, United States Army
Chief of Staff

Official:

MILDRED E. HEDBERG
Brigadier General, United States Army
The Adjutant General

Distribution:

To be distributed in accordance with DA Form 12-37, Organizational Maintenance Requirements for Tank, Bridge Launcher, M60A1, (AVLB).

✿ U.S. GOVERNMENT PRINTING OFFICE: 1985-641-025/20066

TO: (*Forward direct to addressee listed in publication*)	FROM: (*Activity and location*) (*Include ZIP Code*)	DATE
AMSTA-LC-LPIT / TECH PUBS, TACOM-RI 1 Rock Island Arsenal Rock Island, IL 61299-7630	Your address	Date you filled out this form

PART II – REPAIR PARTS AND SPECIAL TOOL LISTS AND SUPPLY CATALOGS/SUPPLY MANUALS

PUBLICATION NUMBER	DATE	TITLE
TM 5-5420-202-20-2	28 October 1985	M60A1 Tank Chassis, Transporting for Bridge, Armored-Vehicle-Launched; Scissoring Type, Class 60

PAGE NO.	COLM NO.	LINE NO.	NATIONAL STOCK NUMBER	REFERENCE NO.	FIGURE NO.	ITEM NO.	TOTAL NO. OF MAJOR ITEMS SUPPORTED	RECOMMENDED ACTION

PART III – REMARKS (*Any general remarks or recommendations, or suggestions for improvement of publications and blank forms. Additional blank sheets may be used if more space is needed.*)

TYPED NAME, GRADE OR TITLE	TELEPHONE EXCHANGE/AUTOVON, PLUS EXTENSION	SIGNATURE
Your Name		Your Signature

USAPPC V3.00

RECOMMENDED CHANGES TO PUBLICATIONS AND BLANK FORMS For use of this form, see AR 25-30; the proponent agency is ODISC4.	Use Part II *(reverse)* for Repair Parts and Special Tool Lists (RPSTL) and Supply Catalogs/Supply Manuals (SC/SM).	DATE
TO: *(Forward to proponent of publication or form) (Include ZIP Code)* AMSTA-LC-LPIT / TECH PUBS, TACOM-RI 1 Rock Island Arsenal Rock Island, IL 61299-7630	**FROM:** *(Activity and location) (Include ZIP Code)*	

PART I – ALL PUBLICATIONS (EXCEPT RPSTL AND SC/SM) AND BLANK FORMS

PUBLICATION/FORM NUMBER	DATE	TITLE
TM 5-5420-202-20-2	28 October 1985	M60A1 Tank Chassis, Transporting for Bridge, Armored-Vehicle-Launched; Scissoring Type, Class 60

ITEM NO.	PAGE NO.	PARA-GRAPH	LINE NO.*	FIGURE NO.	TABLE NO.	RECOMMENDED CHANGES AND REASON *(Provide exact wording of recommended changes, if possible).*

**Reference to line numbers within the paragraph or subparagraph.*

TYPED NAME, GRADE OR TITLE	TELEPHONE EXCHANGE/AUTOVON, PLUS EXTENSION	SIGNATURE

DA FORM 2028, FEB 74 REPLACES DA FORM 2028, 1 DEC 68, WHICH WILL BE USED. USAPPC V3.00

TO: (*Forward direct to addressee listed in publication*) AMSTA-LC-LPIT / TECH PUBS, TACOM-RI 1 Rock Island Arsenal Rock Island, IL 61299-7630	**FROM:** (*Activity and location*) (*Include ZIP Code*)	**DATE**

PART II – REPAIR PARTS AND SPECIAL TOOL LISTS AND SUPPLY CATALOGS/SUPPLY MANUALS

PUBLICATION NUMBER	DATE	TITLE
TM 5-5420-202-20-2	28 October 1985	M60A1 Tank Chassis, Transporting for Bridge, Armored-Vehicle-Launched; Scissoring Type, Class 60

PAGE NO.	COLM NO.	LINE NO.	NATIONAL STOCK NUMBER	REFERENCE NO.	FIGURE NO.	ITEM NO.	TOTAL NO. OF MAJOR ITEMS SUPPORTED	RECOMMENDED ACTION

PART III – REMARKS (*Any general remarks or recommendations, or suggestions for improvement of publications and blank forms. Additional blank sheets may be used if more space is needed.*)

TYPED NAME, GRADE OR TITLE	TELEPHONE EXCHANGE/AUTOVON, PLUS EXTENSION	SIGNATURE

USAPPC V3.00

RECOMMENDED CHANGES TO PUBLICATIONS AND BLANK FORMS For use of this form, see AR 25-30; the proponent agency is ODISC4.	Use Part II *(reverse)* for Repair Parts and Special Tool Lists (RPSTL) and Supply Catalogs/Supply Manuals (SC/SM).	DATE
TO: *(Forward to proponent of publication or form) (Include ZIP Code)* AMSTA-LC-LPIT / TECH PUBS, TACOM-RI 1 Rock Island Arsenal Rock Island, IL 61299-7630	**FROM:** *(Activity and location) (Include ZIP Code)*	

PART I – ALL PUBLICATIONS (EXCEPT RPSTL AND SC/SM) AND BLANK FORMS

PUBLICATION/FORM NUMBER	DATE	TITLE
TM 5-5420-202-20-2	28 October 1985	M60A1 Tank Chassis, Transporting for Bridge, Armored-Vehicle-Launched; Scissoring Type, Class 60

ITEM NO.	PAGE NO.	PARA-GRAPH	LINE NO. *	FIGURE NO.	TABLE NO.	RECOMMENDED CHANGES AND REASON *(Provide exact wording of recommended changes, if possible).*

**Reference to line numbers within the paragraph or subparagraph.*

TYPED NAME, GRADE OR TITLE	TELEPHONE EXCHANGE/AUTOVON, PLUS EXTENSION	SIGNATURE

DA FORM 2028, FEB 74 REPLACES DA FORM 2028, 1 DEC 68, WHICH WILL BE USED. USAPPC V3.00

TO: (*Forward direct to addressee listed in publication*)	FROM: (*Activity and location*) (*Include ZIP Code*)	DATE
AMSTA-LC-LPIT / TECH PUBS, TACOM-RI 1 Rock Island Arsenal Rock Island, IL 61299-7630		

PART II – REPAIR PARTS AND SPECIAL TOOL LISTS AND SUPPLY CATALOGS/SUPPLY MANUALS

PUBLICATION NUMBER	DATE	TITLE
TM 5-5420-202-20-2	28 October 1985	M60A1 Tank Chassis, Transporting for Bridge, Armored-Vehicle-Launched; Scissoring Type, Class 60

PAGE NO.	COLM NO.	LINE NO.	NATIONAL STOCK NUMBER	REFERENCE NO.	FIGURE NO.	ITEM NO.	TOTAL NO. OF MAJOR ITEMS SUPPORTED	RECOMMENDED ACTION

PART III – REMARKS (*Any general remarks or recommendations, or suggestions for improvement of publications and blank forms. Additional blank sheets may be used if more space is needed.*)

TYPED NAME, GRADE OR TITLE	TELEPHONE EXCHANGE/AUTOVON, PLUS EXTENSION	SIGNATURE

USAPPC V3.00

THE METRIC SYSTEM AND EQUIVALENTS

LINEAR MEASURE

1 Centimeter = 10 Millimeters = 0.01 Meters = 0.3937 Inches
1 Meter = 100 Centimeters = 1000 Millimeters = 39.37 Inches
1 Kilometer = 1000 Meters = 0.621 Miles

WEIGHTS

1 Gram = 0.001 Kilograms = 1000 Milligrams = 0.035 Ounces
1 Kilogram = 1000 Grams = 2.2 Lb.
1 Metric Ton = 1000 Kilograms = 1 Megagram = 1.1 Short Tons

LIQUID MEASURE

1 Milliliter = 0.001 Liters = 0.0338 Fluid Ounces
1 Liter = 1000 Milliliters = 33.82 Fluid Ounces

SQUARE MEASURE

1 Sq. Centimeter = 100 Sq. Millimeters = 0.155 Sq. Inches
1 Sq. Meter = 10,000 Sq. Centimeters = 10.76 Sq. Feet
1 Sq. Kilometer = 1,000,000 Sq. Meters = 0.386 Sq. Miles

CUBIC MEASURE

1 Cu. Centimeter = 1000 Cu. Millimeters = 0.06 Cu. Inches
1 Cu. Meter = 1,000,000 Cu. Centimeters = 35.31 Cu. Feet

TEMPERATURE

$\frac{5}{9}(°F - 32) = °C$
212° Fahrenheit is equivalent to 100° Celsius
90° Fahrenheit is equivalent to 32.2° Celsius
32° Fahrenheit is equivalent to 0° Celsius
$\frac{9}{5}$ °C + 32 = °F

APPROXIMATE CONVERSION FACTORS

TO CHANGE	TO	MULTIPLY BY
Inches	Centimeters	2.540
Feet	Meters	0.305
Yards	Meters	0.914
Miles	Kilometers	1.609
Square Inches	Square Centimeters	6.451
Square Feet	Square Meters	0.093
Square Yards	Square Meters	0.836
Square Miles	Square Kilometers	2.590
Acres	Square Hectometers	0.405
Cubic Feet	Cubic Meters	0.028
Cubic Yards	Cubic Meters	0.765
Fluid Ounces	Milliliters	29.573
Pints	Liters	0.473
Quarts	Liters	0.946
Gallons	Liters	3.785
Ounces	Grams	28.349
Pounds	Kilograms	0.454
Short Tons	Metric Tons	0.907
Pound-Feet	Newton-Meters	1.356
Pounds per Square Inch	Kilopascals	6.895
Miles per Gallon	Kilometers per Liter	0.425
Miles per Hour	Kilometers per Hour	1.609

TO CHANGE	TO	MULTIPLY BY
Centimeters	Inches	0.394
Meters	Feet	3.280
Meters	Yards	1.094
Kilometers	Miles	0.621
Square Centimeters	Square Inches	0.155
Square Meters	Square Feet	10.764
Square Meters	Square Yards	1.196
Square Kilometers	Square Miles	0.386
Square Hectometers	Acres	2.471
Cubic Meters	Cubic Feet	35.315
Cubic Meters	Cubic Yards	1.308
Milliliters	Fluid Ounces	0.034
Liters	Pints	2.113
Liters	Quarts	1.057
Liters	Gallons	0.264
Grams	Ounces	0.035
Kilograms	Pounds	2.205
Metric Tons	Short Tons	1.102
Newton-Meters	Pound-Feet	0.738
Kilopascals	Pounds per Square Inch	0.145
Kilometers per Liter	Miles per Gallon	2.354
Kilometers per Hour	Miles per Hour	0.621

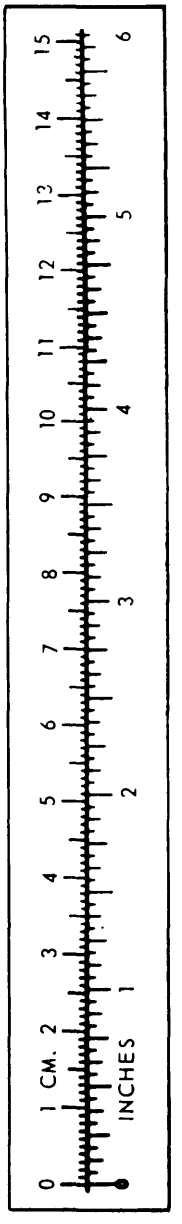

TA089991

PIN: 058911-000